STANDARD
Basic

CATALOGO TECNICO
TECHNICAL CATALOGUE

CT16 IGDB 3.1 | **ITA - ENG - DEU**

INDICE
INDEX
INHALTSVERZEICHNIS

A Generalità
General information
Allgemeines

B Riduttori a vite senza fine
Worm gearboxes
Schneckengetriebel

Riduttori a vite senza fine RI - RMI
Worm gearboxes RI - RMI
Schneckengetriebe RI - RMI

Riduttori a vite senza fine combinati CRI - CRMI
Double worm gearboxes CRI - CRMI
Doppelschneckengetriebe CRI - CRMI

Riduttori a vite senza fine con precoppia CR - CB - size 40-50-70-85-110
Helical worm gearboxes CR - CB - size 40-50-70-85-110
Stirnradschneckengetriebe CR - CB - size 40-50-70-85-110

Riduttori a vite senza fine con precoppia CR - CB - size 130-150-180-215-250
Helical worm gearboxes CR - CB - size 130-150-180-215-250
Stirnradschneckengetriebe CR - CB - size 130-150-180-215-250

Limitatore di coppia
Torque limiter
Rutschkupplung

C
Riduttori a vite senza fine UI - UMI
Worm gearboxes UI - UMI
Schneckengetriebe UI - UMI

D
Riduttoria vite senza fine IMPORT WI-WMI
Worm gearboxes IMPORT WI-WMI
Schneckengetriebe IMPORT WI-WMI

E
Rinvii angolari Z
Right angle Z
Winkelgetriebe Z

F
Rinvii angolari ZL
Right angle ZL
Winkelgetriebe ZL

H
Variatori meccanici WM
Mechanical variators WM
Mechanischen Verstellgetriebe WM

Z Posizioni di montaggio
Mounting position
Montagepositionen — Z1

Gestione Revisioni Cataloghi STM
Managing STM Catalog Revisions
Management Wiederholt Kataloge STM — Z5

1.0 GENERALITA'

1.1 Unita' di misura

1.0 GENERAL INFORMATION

1.1 Measurement units

1.0 ALLGEMEINES

1.1 Maßeinheiten

Tab. 1.1

SIMBOLO *SYMBOL* SYMBOL	DEFINIZIONE	*DEFINITION*	DEFINITION	UNITA' DI MISURA *MEASUREMENT UNIT* MAßEINHEIT	
Fr 1-2	Carico Radiale	*Radial load*	Radialbelastung	**N**	1N=0.1daN ≅ 0.1kg
Fa 1-2	Carico assiale	*Axial load*	Axialbelastung	**N**	
	Dimensioni	*Dimensions*	Abmessungen	**mm**	
FS	Fattore di servizio	*Service factor*	Betriebsfaktor		
FS'	Fattore di servizio motoriduttore	*Gear motors service factor*	Betriebsfaktor Getriebemotoren		
Kg	Massa	*Mass*	Masse	**kg**	
T_{2M}	Momento torcente riduttore	*Output torque*	Drehmoment Getriebe	**Nm**	1Nm=0.1daNm≅0.1kgm
T_2	Momento torcente motorid.	*Gear motor torque*	Drehmoment Getriebemotor	**Nm**	
P	Potenza motore	*Gear unit power*	Leistung Getriebe	**kW**	
Ptn	Potenza limite termico	*Limit thermal capacity*	Thermische Leistungsgrenze	**kW**	
Pc	Potenza corretta	*Correct power*	Tatsächliche Leistung	**kW**	1kW = 1.36 HP (PS)
P_1	Potenza motoriduttore	*Gear motor power*	Leistung Getriebemotor	**kW**	
P'	Potenza richiesta in uscita	*Output power*	Erforderliche Abtriebsleistung	**kW**	
RD	Rendimento dinamico	*Dynamic efficiency*	Dynamischer Wirkungsgrad		
RS	Rendimento statico	*Static efficiency*	Statischer Wirkungsgrad		
ir	Rapporto di trasmissione	*Ratio*	Übersetzungsverhältnis		
n_1	Velocità albero entrata	*Input speed*	Antriebsdrehzahl	**min^{-1}**	1 min^{-1} = 6.283 rad.
n_2	Velocità albero in uscita	*Output speed*	Abtriebsdrehzahl		
Tc	Temperatura ambiente	*Ambient temperature*	Umgebungstemperatur	**°C**	

1.2 Velocità in entrata

Tutte le prestazioni dei riduttori , variatori meccanici e rinvii angolari sono calcolate in base alle seguenti velocità in entrata:

1.2 Input speed

All performances of gearboxes and variators are calculated according to the following input speeds:

1.2 Antriebsdrehzahl

Alle Wirkungsgrade der Getriebe und Verstellgetriebe werden auf der Grundlage folgender Antriebsdrehzahlen berechnet:

Tab. 1.2

Riduttori *Gearboxes* Getriebe	a vite senza fine *wormgearboxes* Schneckengetriebe	a vite senza fine combinati *combined wormgearboxes* Kombinierte Schneckengetriebe	a vite senza fine con precoppia *Helical wormgearboxes* Stirnrad Schneckengetriebe	variatori meccanici *mechanical variators* Verstell-Getriebe	rinvii angolari *right angle gears* Winkelgetriebe
	UI - RI - WI	**CRI-CWI**	**CR**	**VM - WM**	**Z - ZL**
n_1(rpm)	2800*	—	2800 (max)	2800 (max)	2800 (max)
	1400	1400	1400	1400	1000
	900	—	900	900	900
	500	—	500	—	500

* Nei riduttori a vite senza fine, per situazioni con velocità di ingresso particolari, attenersi alla tabella sotto riportata che evidenzia le situazioni critiche.

** As far as worm reduction units are concerned, in situations with special input speeds, adhere to the table below that highlights any critical situations.*

* Bei den Schneckengetrieben ist unter Bedingungen mit besonderen Antriebsgeschwindigkeiten die nachstehend aufgeführte Tabelle zu beachten, die kritische Situationen hervorhebt.

	UI - RI - WI															
	25	**28**	**30**	**40**	**50**	**63**	**70**	**75**	**85**	**90**	**110**	**130**	**150**	**180**	**215**	**250**
1500 < n_1 < 3000	OK	OK	OK	OK	OK	! **Contattare il ns. servizio tecnico** *Contact our technical dept* **Wenden Sie sich an unseren technischen Service**										
n_1 > 3000																

Velocità inferiori a 1400 min^{-1} ottenute con l'ausilio di riduzioni esterne o di azionamenti, sono sicuramente favorevoli al buon funzionamento del riduttore il quale può operare con temperature di funzionamento inferiori a vantaggio di tutto il cinematismo (in particolare nei riduttori a vite senza fine).
E' necessario però considerare che velocità molto basse non consentono un' efficace lubrificazione di tutto il gruppo, per cui tale eventualità dovrà essere segnalata per poter effettuare schermature dei cuscinetti superiori nei riduttori delle taglie maggiori o applicare sistemi di lubrificazione forzata (pompa di lubrificazione).

Speeds lower than 1400 rpm obtained by means of external reductions or drives, surely contribute to the good working of the gearbox which can operate at lower working temperatures to the advantage of the whole kinematic movement (in particular in case of the worm gearboxes).
However, please note that very low speeds do not allow an efficacious lubrication of the whole unit. Therefore this case shall be indicated to screen the upper bearings of the gearboxes of larger sizes or to apply systems with forced lubrications (lubrication pump).

Drehzahlen unter 1400 min^{-1}, die mit Hilfe äußerer Untersetzungen oder Antriebe erhalten werden, sind für den optimalen Betrieb des Getriebes vorteilhaft, denn so kann dieses mit niedrigen Betriebstemperaturen arbeiten, was sich zum Vorteil der gesamten Getriebegruppe auswirkt (insbesonders bei Schneckengetrieben).
Es muß jedoch berücksichtigt werden, daß sehr niedrige Drehzahlen keine wirksame Schmierung der gesamten Gruppe zulassen. Wird mit solch niedrigen Drehzahlen gearbeitet, muß dies angegeben werden, damit wir bei den größeren Getrieben die oberen Lager abschirmen oder Zwangsschmiersysteme (Schmierpumpe) einsetzen können.

1.3 Fattore di servizio

Il fattore di servizio FS permette di qualificare, in prima approssimazione, la tipologia dell'applicazione tenendo conto della natura del carico (A, B, C), della durata di funzionamento h/d (ore giornaliere) e del numero di avviamenti/ora. Il coefficiente così trovato dovrà essere uguale o inferiore al fattore di servizio del motoriduttore o del motorinvio angolare FS' dato dal rapporto fra la coppia nominale del riduttore T_{2M} indicata a catalogo e la coppia M' richiesta dall'applicazione .
I valori di FS indicati nella tab. 1.3, sono relativi all'azionamento con motore elettrico, se utilizzato un motore a scoppio, si dovrà tenere conto di un fattore di moltiplicazione 1.3 se a più cilindri e 1.5 se monocilindro.
Se il motore elettrico applicato è autofrenante, considerare un numero di avviamenti doppio di quello effettivamente richiesto.

1.3 Service factor

The service factor FS permits approximate qualification of the type of application, taking into account the type of load (A,B,C), length of operation h/d (hours/day) and the number of start-up/hour. The coefficient thus calculated must be equal or less than the motorgear unit service factor FS' given by the rated torque of gear unit T_{2M} as indicated in the catalogue and the torque M' required by the application.
The FS values reported in Table 1.3 refer to a drive unit with an electric motor. If a combustion engine is used, a multiplication factor of 1.3 must be applied for a several-cylinder engine, 1.5 for a single-cylinder engine.
If the electric motor applied is self-braking, consider twice the number of start-up than those actually required.

1.3 Betriebsfaktor

Mit Hilfe des Betriebsfaktors FS kann in einer ersten Annäherung das richtige Untersetzungsgetriebe für die gewünschte Anwendungsart ermittelt werden. Dabei sind folgende Werte zu beachten: Art der Last (A, B, C), Betriebsstunden pro Tag (h/d), Anzahl der Starts pro Stunde. Der so ermittelte Koeffizient sollte dem Betriebsfaktor FS', der sich aus dem Verhältnis zwischen dem Nenndrehmoment des Getriebes T_{2M} (s. Katalog) und dem für die Anwendung erforderlichen Drehmoment M' ergibt, entweder entsprechen oder niedriger liegen.
Die FS-Werte, die in Tabelle 1.3 angegeben werden, beziehen sich auf den Antrieb mit Elektromotor. Wird ein Verbrennungsmotor verwendet, so ist bei mehreren Zylindern ein Multiplikationsfaktor von 1,3 und bei einem Einzylindermotor ein Faktor von 1,5 zu berücksichtigen.
Ist der verwendete Elektromotor ein Bremsmotor, so ist die Zahl der tatsächlichen Startvorgänge zu verdoppeln.

Tab. 1.3

FATTORE DI SERVIZIO / *SERVICE FACTOR* / BETRIEBSFAKTOR
FS

Classe di carico *Load class* Lastklasse	h/d	N. AVVIAMENTI/ORA / *N. START-UP/HOUR* / ANZAHL DER STARTVORGÄNGE PRO STUNDE								
		2	**4**	**8**	**16**	**32**	**63**	**125**	**250**	**500**
A	**4**	0.85	0.9	0.9	0.93	0.98	1.03	1.06	1.1	1.2
	8	1.0	1.0	1.1	1.1	1.15	1.2	1.24	1.3	1.3
	16	1.2	1.2	1.25	1.3	1.35	1.45	1.5	1.5	1.55
	24	1.4	1.4	1.45	1.5	1.55	1.6	1.65	1.7	1.75
	APPLICAZIONI / *APPLICATIONS* / ANWENDUNGEN									
Carico uniforme ***Uniform load*** **Gleichmäßig verteilte Last**	Agitatori per liquidi puri	*Pure liquid agitators*	Rührwerke für reine Flüssigkeiten							
	Alimentatori per fornaci	*Fournace feeders*	Beschickungsvorrichtungen für Brennöfen							
	Alimentatori a disco	*Disc feeders*	Telleraufgeber							
	Filtri di lavaggio con aria	*Air laundry filters*	Spülluftfilter							
	Generatori	*Generators*	Generatoren							
	Pompe centrifughe	*Centrifugal pumps*	Kreiselpumpen							
	Trasportatori con carico uniforme	*Uniform load conveyors*	Förderer mit gleichmäßig verteilter Last							

Classe di carico *Load class* Lastklasse	h/d	N. AVVIAMENTI/ORA / *N. START-UP/HOUR* / ANZAHL DER STARTVORGÄNGE PRO STUNDE								
		2	**4**	**8**	**16**	**32**	**63**	**125**	**250**	**500**
B	**4**	1.11	1.12	1.15	1.19	1.23	1.28	1.32	1.36	1.40
	8	1.29	1.31	1.34	1.40	1.45	1.51	1.56	1.60	1.64
	16	1.54	1.56	1.59	1.65	1.71	1.78	1.84	1.90	1.96
	24	1.73	1.75	1.80	1.90	1.97	2.05	2.10	2.16	2.22
	APPLICAZIONI / *APPLICATIONS* / ANWENDUNGEN									
Carico con urti moderati ***Moderate shock load*** **Last mit mäßigen Stößen**	Agitatori per liquidi e solidi	*Liquid and solid agitators*	Rührwerke für Flüssigkeiten und Feststoffe							
	Alimentatori a nastro	*Belt conveyors*	Bandförderer							
	Argani con medio servizio	*Medium service winches*	Mittlere Winden							
	Filtri con pietre e ghiaia	*Stone and gravel filters*	Stein- und Kiesfilter							
	Viti per espulsione acqua	*Dewatering screws*	Abwasserschnecken							
	Flocculatori	*Flocculator*	Flockvorrichtungen							
	Filtri a vuoto	*Vacuum filters*	Vakuumfilter							
	Elevatori a tazze	*Bucket elevators*	Becherwerke							
	Gru	*Cranes*	Krane							

Classe di carico *Load class* Lastklasse	h/d	N. AVVIAMENTI/ORA / *N. START-UP/HOUR* / ANZAHL DER STARTVORGÄNGE PRO STUNDE								
		2	**4**	**8**	**16**	**32**	**63**	**125**	**250**	**500**
C	**4**	1.46	1.46	1.48	1.51	1.57	1.61	1.62	1.64	1.66
	8	1.71	1.71	1.73	1.76	1.82	1.86	1.87	1.89	1.89
	16	2.04	2.05	2.07	2.10	2.15	2.20	2.21	2.23	2.23
	24	2.31	2.31	2.33	2.36	2.42	2.48	2.52	2.54	2.56
	APPLICAZIONI / *APPLICATIONS* / ANWENDUNGEN									
Carico con forti urti ***Heavy shock load*** **Last mit starken Stößen**	Argani per servizio pesante	*Heavy duty hoists*	Winden für schwere Lasten							
	Estrusori	*Extruders*	Extruder							
	Calandre per gomma	*Crusher rubber calenders*	Gummikalander							
	Presse per mattoni	*Brick presses*	Ziegelpressen							
	Piallatrici	*Planing machine*	Hobelmaschinen							
	Mulini a sfera	*Ball mills*	Kugelmühlen							

1.3 Fattore di servizio

Nel caso di riduttori a vite senza fine, occorre tener conto della temperatura ambiente (T_{amb}): il fattore di servizio va allora corretto come segue:

1.3 Service factor

Ambient temperature must also be taken into consideration when choosing wormgearboxes (T_{amb}): the service factor must be corrected as follows:

1.3 Betriebsfaktor

Im Falle der Schneckengetriebe muß die Raumtemperatur (T_{raum}): berücksichtigt werden: der Betriebsfaktor muß also wie folgt bereinigt werden:

Tab. 1.4

T_{amb}	Fattore di servizio / *Service factor* / Betriebsfaktor
30 ÷ 40 °C	FS x 1.10
40 ÷ 50 °C	FS x 1.2
50 ÷ 60 °C	FS x 1.4
> 60 °C	Interpellare ns. Assistenza Tecnica / *Contact our Technical Assistance Service* / Bitte technischen Service hinzuziehen

Nel caso di variatore meccanico è necessario evidenziare inoltre che il numero di avviamenti massimo consentito senza provocare conseguenze sulla durata del variatore, non deve superare gli 8 - 10 al minuto

About mechanical variator, note that the maximum number of starts allowed to preserve variator life is 8 - 10 starts per minute.

Um die maximale Lebensdauer zu gewährleisten, sollten maximal 8-10 Schaltungen pro Minute getätigt werden.

1.4 Rendimento (ed irreversibilità)

Nei variatori meccanici vale circa 0.84 alla velocità massima.
Nei rinvii angolari il rendimento dinamico RD può essere considerato pari a 0.94-0.97.
Nei riduttori a vite senza fine invece, è opportuno definire il rendimento in base al rapporto di riduzione distinguendo chiaramente fra il rendimento dinamico (questi valori sono riportati nelle tabelle delle prestazioni) e il rendimento statico (tab. 1.6).
Il rendimento dinamico RD aumenta con il crescere dell'angolo dell'elica (bassi rapporti di riduzione), con il passare da oli minerali a sintetici e con l'incremento della velocità di strisciamento.

Durante la fase di rodaggio il suo valore risulta essere sensibilmente inferiore rispetto a quello riportato nelle tabelle delle prestazioni.

Il rendimento statico RS o rendimento dell'avviamento, è molto importante, al fine di una corretta scelta del riduttore, per quelle applicazioni in cui non si raggiungono mai le condizioni di regime (servizi intermittenti).

Un riduttore è irreversibile staticamente (non azionabile dall'albero lento) quando il suo RS è minore di 0.5. In presenza di urti e vibrazioni tale condizione può non essere verificata.
Un riduttore è irreversibile dinamicamente (blocco istantaneo della rotazione della vite qualora non sia più presente la causa della rotazione stessa) quando il suo RD è minore di 0.5.

1.4 Efficiency (and irreversibility)

Equal to 0.84 in case of variators at maximum speed.
In right angle drives the dynamic efficiency RD can be considered equal to 0.94 and 0.97
It is advisable to determine the efficiency according to the reduction ratio in the worm gearboxes and to make a distinction between the dynamic efficiency (these values are shown in the performance tables)and static efficiency (see tab. 1.6).
Dynamic efficiency RD increases gradually with an increase of the helix angle (low reduction04 ratios), with a change from mineral to synthetic lubricants and with an increase of rubbing speed.

During running in period RD value is substantially inferior to the one listed in the performance table.

Static efficiency RS or starting efficiency is very important with respect to the correct selection of the gearbox especially on applications where the optimal operating conditions are never attained (intermittent duty).

A gearbox is statically irreversible (cannot be put into operation by output shaft), when its RS is less than 0.5. In the case of shocks or vibrations this can happen anyway.
A gearbox is dynamically irreversible (instantaneous stop lock of wormshaft rotation if the cause of the same rotation is not present anymore), when its RD value is less than 0.5.

1.4 Wirkungsgrad (und Selbsthemmung)

Mechanischen Verstellgetrieben ca. 0,84 bei Maximalgeschwindigkeit.
Der Wirkungsgrad der Winkelgetriebe beträgt 0.94-0.97. Bei Schneckengetrieben ist es hingegen zweckmäßig, den Wirkungsgrad ausgehend vom Untersetzungsverhältnis zu bestimmen, wobei zwischen dynamischem Wirkungsgrad (die Werte sind jeweils in den Leistungstabellen aufgeführt) und statischem Wirkungsgrad zu unterscheiden ist (siehe tab 1.6) . Der dynamische Wirkungsgrad RD erhöht sich bei einer Vergrößerung des Steigungswinkels (bei niedrigen Untersetzungsverhältnissen), bei der Verwendung von synthetischen anstatt Mineralölen und bei Erhöhung der Gleitgeschwindigkeit.
Während der Einlaufzeit ist der Wert wesentlich niedriger als derjenige in den Leistungstabellen.

Der statische Wirkungsgrad RS oder Anlaufwirkungsgrad ist bei der richtigen Wahl des Untersetzungsgetriebes sehr wichtig, speziell bei solchen Anwendungen, bei denen der optimale Betriebszustand nicht erreicht wird (Aussetzbetrieb).
Ein Getriebe ist statisch selbsthemmend (kann von der Abtriebswelle nicht in Gang gesetzt werden), wenn sein statischer Wirkungsgrad (RS) unter 0.5 liegt. Bei Stößen oder Vibrationen kann dies jedoch trotzdem vorkommen. Ein Getriebe ist dynamisch selbsthemmend (sofortiges Blockieren der Schnekke, wenn die Ursache dieser Drehung nicht mehr vorhanden ist) wenn sein dynamischer Wirkungsgrad RD unter 0.5

1.4 Rendimento (ed irreversibilità)

In Tab. 1.5 sono riportate le fasce di reversibilità ed irreversibilità (dinamiche e statiche) in funzione delle caratteristiche delle dentature dei riduttori a vite senza fine.
Poichè la totale irreversibilità è praticamente impossibile da realizzarsi, è sempre preferibile, in applicazioni che lo necessitano, ricorrere all'utilizzo di freni esterni.
Analogamente al caso dinamico, anche il rendimento statico RS (vedi tab. 1.6) tende ad aumentare durante la fase di rodaggio.
Esso tiene conto della resistenza al moto offerta nell'ingranamento vite-corona e sviluppata nei paraoli e cuscinetti; data l'incertezza di queste componenti, si capisce che questi dati sono solo indicativi.

1.4 Efficiency (and irreversibility)

In Table 1.5 reversibility and irreversibility range of values (dynamic and static) is indicated with respect to toothing characteristics.
Since total irreversibility is practically impossible to realize, it is always preferable to adopt external measures, such as brakes, in order to guarantee irreversibility if required by particular applications.
As dynamic efficiency, also static efficiency RS (see tab. 1.6) is going to increase during running period. It include many components: gear meshing, oilseals and bearings.
As the uncertainty of this components, we give this data as approximative.

1.4 Wirkungsgrad (und Selbsthemmung)

In Tabelle 1.5 werden die (dynamischen und statischen) Reversibilitäts- und Selbsthemmungswerte je nach Untersetzung angegeben.
Da eine vollständige Selbsthemmung praktisch nicht möglich ist, wird empfohlen, in entsprechenden Anwendungen externe Bremsen einzusetzen.
Auch der statische Wirkungsgrad RS (siehe Tabelle 1.6) tendiert in der Einlaufzeit anzusteigen, genau wie der dynamische Wert. Dieser Wert berücksichtigt den Anlaufwiderstand von Schnecke- Schneckenwelle sowie in den Öldichtungen und Lagern. Aufgrund der nicht exakten Bestimmbarkeit dieser Faktoren sind diese Daten lediglich richtungsweisend.

Tab. 1.5

	Rapporti di riduzione / *Reduction ratios*/ Übersetzungsverhältnis (ir)										
UI - RI UMI - RMI WI - WMI	**7 7.5**	**10**	**15**	**20**	**25 28 30**	**40**	**49 50**	**56 60**	**70**	**80**	**100**
	Rapporti di riduzione / *Reduction ratios*/ Übersetzungsverhältnis (i_1, i_2)										
CRI - CWI CRMI - CWMI	**7 7.5**	**10**	**15**	**20**	**25 28 30**	**40**	**49 50**	**56 60**	**70**	**80**	**100**
	Rapporti di riduzione / *Reduction ratios*/ Übersetzungsverhältnis (i_2)										
CR CB			**15**		**28**		**49**				**100**

Reversibilità totale *Total reversibility* Totale Reversibilität	Zona di incertezza *Uncertainty zone* Übergangsbereich	Irreversibilità statica /Reversibilità dinamica *Static irreversibility / Dynamic reversibility* Statische Selbsthemmung / Dynamische Reversibilität

La Tab. 1.6 riporta il valore del rendimento statico attribuito ad ogni rapporto di riduzione.

Table 1.6 shows the static efficiency given to every reduction ratio.

In Tabelle 1.6 ist der jedem Untersetzungsverhältnis zugeordnete statische Wirkungsgrad aufgeführt.

Tab. 1.6 **Valori del rendimento statico RS (%) / *Static efficiency RS (%)* / Statischer Wirkungsgrad RS (%)**

ir	5	7	7.5	10	11	15	19.5	20	25	28	29.5	30	40	49	50	56	57	60	69	70	79	80	98	100
WI 25	-	-	71	68	-	61	-	56	-	46	-	41	36	-	36	-	-	34	-	-	-	-	-	-
RI 28	-	70	-	67	-	61	-	57	-	46	-	-	41	38	-	36	-	-	-	32	-	25	-	23
WI 30	-	-	67	63	-	55	-	50	43		-	39	35		31		-	27	-	-	-	23	-	-
UI-RI 40	75	72	-	69	-	62	-	55	-	48	-	-	39	36	-	34	-	-	-	27	-	26	-	25
WI 40	-	-	71	67	-	60	-	55	51	-	-	45	40	-	36	-	-	32	-	-	-	28	-	24
UI-RI 50	76	73	-	70		68	-	60	-	51	-	-	46	42	-	40	-	-	-	36	-	27	-	25
WI 50	-	-	70	66	-	59	-	55	51	-	-	44	39	-	35	-	-	32	-	-	-	27	-	23
UI-RI 63	76	74	-	70	-	64	-	60	-	50	-	-	46	42	-	40	-	-	-	36	-	28	-	25
WI 63	-	-	71	67	-	60	-	55	51	-	-	45	40	-	36	-	-	33	-	-	-	28	-	24
RI 70	-	74	-	70	-	64	-	60	-	49	-	-	45	40	-	39	-	-	-	34	-	31	-	29
UI 75	-	73	-	70	-	62	-	60	-	49	-	-	45	40	-	39	-	-	-	35	-	31	-	28
WI 75	-	-	71	68	-	61	-	57	53	-	-	46	42	-	38	-	-	35	-	-	-	29	-	26
RI 85	-	73	-	70	-	64	-	62	-	48	-	-	46	41	-	43	-	-	-	38	-	31	-	27
UI 90	-	72	-	70	-	65	-	62	-	50	-	-	47	43	-	42	-	-	-	38	-	32	-	28
WI 90	-	-	73	70	-	64	-	60	56	-	-	49	45	-	41	-	-	38	-	-	-	32	-	28
RI 110	-	74	-	72	-	64	-	63	-	52	-	-	48	45	-	44	-	-	-	39	-	33	-	28
WI 110	-	-	72	69	-	63	-	62	59	-	-	48	48	-	44	-	-	41	-	-	-	36	-	32
RI 130	-	74	-	72	-	68	-	64	-	51	-	-	47	44	-	45	-	-	-	40	-	34	-	29
WI 130	-	-	72	69	-	63	-	61	58	-	-	49	46	-	43	-		39	-	-	-	34	-	30
RI 150	-	75	-	73	-	68	-	65	-	53	-	-	48	46	-	47	-	-	-	41	-	31	-	27
WI 150	-	-	73	71	-	66	-	60	57	-	-	54	45	-	42	-	-	39	-	-	-	33	-	29
RI 180	-	75	-	73	-	69	-	65	-	54	-	-	49	46	-	47	-	-	-	41	-	33	-	30
RI 215	-	71	-	70	-	67	64	-	-	60	-	-	47	-	44	-	40	-	40	-	-	32	-	32
RI 250	-	70	-	-	70	70	-	61	-	-	58	-	46	43	-	-	-	42	-	34	34	-	34	-
CR 40	—	—	—	—	—	62	—	—	—	48	—	—	—	36	—	—	—	—	—	—	—	—	—	25
CR 50	—	—	—	—	—	68	—	—	—	51	—	—	—	42	—	—	—	—	—	—	—	—	—	28
CR 70	—	—	—	—	—	64	—	—	—	49	—	—	—	40	—	—	—	—	—	—	—	—	—	29
CR 85	—	—	—	—	—	64	—	—	—	48	—	—	—	41	—	—	—	—	—	—	—	—	—	30
CR 110	—	—	—	—	—	64	—	—	—	52	—	—	—	45	—	—	—	—	—	—	—	—	—	33
CR 130	—	—	—	—	—	68	—	—	—	51	—	—	—	44	—	—	—	—	—	—	—	—	—	29
CR 150	—	—	—	—	—	68	—	—	—	53	—	—	—	46	—	—	—	—	—	—	—	—	—	27
CR 180	—	—	—	—	—	69	—	—	—	54	—	—	—	46	—	—	—	—	—	—	—	—	—	30
CR 215	—	—	—	—	—	67	—	—	—	60	—	—	—	—	44	—	—	—	—	—	—	—	—	32
CR 250	—	—	—	—	—	70	—	—	—	—	58	—	—	43	—	—	—	—	—	—	—	—	34	—

1.5 Gioco angolare

Nella tab riportiamo i valori del gioco angolare riscontrabili sull'albero in uscita nei riduttori a vite senza fine.
Questi valori, espressi in primi di grado ('), sono indicativi in quanto possono variare in funzione della temperatura e dell'usura.

Su richiesta, per applicazioni particolari, si possono fornire riduttori con giochi angolari inferiori.

1.5 Backlash

Values of the output shaft backlash on wormgearboxes are shown in table Such values are expressed in minute (') and are approximate as they can change according to temperature and wear.

For particular applications, gearboxes with low backlash adjustable backlash are available upon request.

1.5 Flankenspiel

Für die Schneckengetriebe ist das Spiel der Abtriebswelle in Tabelle (in Winkelminuten ') aufgeführt.
Diese Werte sind Richtwerte, da sie von der Temperatur und vom Verschleiß abhängen.

Für spezielle Anwendungen liefern wir auf Wunsch spielfreie Untersetzungsgetriebe bzw. mit einstellbarem Flankenspiel.

RI-RMI UI-UMI WI-VMI	CRI CRMI	Gioco angolare *Backlash* Flankenspiel (')		CB CR	Gioco angolare *Backlash* Flankenspiel (')		Z ZL	Gioco angolare *Backlash* Flankenspiel (')	
		Min	Max		Min	Max		Min	Max
28	.../28	5.5'	17'		—		Contattare il ns. servizio tecnico *Contact our technical dept.* Wenden Sie sich an unseren technischen Vertriebsservice		
40	.../40	4.5'	14'	40	4.5'	14'			
50	.../50	3.5'	12.5'	50	3.5'	12.5'			
63	.../63	3.5'	12.5'		—				
70	.../70	3'	11.5'	70	3'	11.5'			
75	—	3'	11'		—				
85	.../85	3'	11'	85	3'	11'			
90	—	3'	10'		—				
110	.../110	2.5'	9.5'	110	2.5'	9.5'			
130	.../130	2.5'	9.5'	130	2.5'	9.5'			
150	.../150	2.5'	9.5'	150	2.5'	9.5'			
180	.../180	2.5'	9.5'	180	2.5'	9.5'			
215	.../215	2.5'	6.5'	215	2.5'	6.5'			
250	.../250	2.5'	6.5'	250	2.5'	6.5'			

1.6 Lubrificazione

La lubrificazione dei riduttori, variatori e rinvii angolari è consentita mediante un sistema misto bagno olio e sbattimento, che garantisce normalmente la lubrificazione di tutti i componenti interni al riduttore, rinvio angolare e/o variatore.
Per quelle posizioni di montaggio caratterizzate da assi di rotazione verticali, vengono adottate particolari soluzioni al fine di garantire una buona lubrificazione anche degli organi presenti nelle posizioni più sfavorevoli.
I riduttori a vite senza fine sono caratterizzati da una elevata componente di strisciamento, variabile a seconda delle caratteristiche di dentatura dell' ingranaggio e delle velocità di rotazione del cinematismo, e per questo motivo necessitano di una accurata lubrificazione. Per questo tipo di riduttori usiamo e consigliamo oli a base sintetica, che migliorano il rendimento e possiedono una maggiore stabilità di viscosità. E' importante che gli additivi E.P. presenti negli oli siano blandi e non agressivi nei confronti del bronzo e delle guarnizioni. La lubrificazione a grasso è consigliata solo con grassi a base sintetica e molto fluidi (NLGI 00); vengono preferiti per esercizi con elevati urti e per funzionamenti intermittenti.
Usando il grasso anzichè l'olio, si ha un minor smaltimento del calore, una riduzione del rendimento, un incremento dell'usura e una minore lubrificazione di tutti i componenti.

1.6 Lubrication

Gearboxes and variators lubrication is provided trough a combination of oil immersion and oil-splash patterns, which normally guarantees the lubrication of all internal components.

For some mounting positions, typically those featuring a vertical shaft, provisions are made to guarantee lubrication of even the least favourably located drive components.

Wormgearboxes are characterized by an high sliding velocity, which depends by teeth's characteristics and input speed, and this is why they need a proper lubrication.
For this kind of gearboxes STM use and suggest synthetic based oils, which increase the dynamic efficiency and guarantee longer duration and higher viscosity stability.
It is very important that E.P. additives present in lubricants are not aggressive towards bronze and oilseals.
Grease lubrication is advisable only if synthetic based and fluid grease is used (NLGI 00). It is preferable to use such a lubrication when having heavy shocks and intermittent duties.
Grease used in place of oil contributes to a more difficult elimination of heat, a lower efficiency and an increase in wear and tear as well as a lower lubrication of all components.

1.6 Schmierung

Die Schmierung der Getriebe und der Variatoren erfolgt über ein Mischverfahren mit Ölbad- und Tauchbadschmierung. Dadurch kann in der Regel die Schmierung aller internen Bestandteile des Getriebes oder des Variators gewährleistet werden.
Bei Montagepositionen mit vertikalen Drehachsen werden spezielle Lösungen angewandt, um auch die Bestandteile in schwer erreichbaren Positionen ausreichend zu schmieren.
Die Schneckengetriebe weisen eine hohe Reibungskomponente auf, die jeweils hinsichtlich der Untersetzung und der Drehgeschwindigkeit des Getriebes variiert. Daher erfordert dieser Getriebetyp eine sorgfältige Schmierung. Empfehlenswert ist synthetisches Öl, das den Wirkungsgrad steigert und eine höhere Stabilität im Hinblick auf die Viskosität aufweist.
Wichtig ist, daß die E.P.-Additive der Öle mild sind und die Bronze sowie die Dichtungen nicht angreifen.
Für die Schmierung mit Fett empfehlen wir, nur hochviskose (NLGI 00) Fette mit synthetischer Base zu verwenden, diese werden für den aussetzenden Betrieb vorgezogen.
Wird Fett anstelle von Öl verwendet, so resultiert hieraus eine verminderte Schmierung aller Komponenten, eine niedrigere Wärmeabgabe, ein niedrigerer Wirkungsgrad und ein höherer Verschleiß.

1.6 Lubrificazione

Gli oli disponibili appartengono generalmente a tre grandi famiglie:
1) Oli minerali
2) Oli sintetici Poli-Alfa-Olefine
3) Oli sintetici Poli-Glicole

La scelta più appropriata è generalmente legata alle condizioni di impiego. riduttori non particolarmente caricati e con un ciclo di impiego discontinuo. senza escursioni termiche importanti, possono certamente essere lubrificati con olio minerale.
Nei casi di impiego gravoso, quando i riduttori saranno prevedibilmente caricati molto ed in modo continuativo, con conseguente prevedibile innalzamento della temperatura, è bene utilizzare lubrificanti sintetici tipo polialfaolefine (PAO).

Gli oli di tipo poliglicole (PG) sono da utilizzare strettamente nel caso di applicazioni con forti strisciamenti fra i contatti, ad esempio nelle viti senza fine. Debbono essere impiegati con grande attenzione poiché non sono compatibili con gli altri oli e sono invece completamente miscibili con l'acqua. Questo fenomeno è particolarmente pericoloso poiché non si nota, ma deprime velocemente le caratteristiche lubrificanti dell'olio.

Oltre a questi già menzionati, ricordiamo che esistono gli oli per l'industria alimentare. Questi trovano specifico impiego nell'industria alimentare in quanto sono prodotti speciali non nocivi alla salute. Vari produttori forniscono oli appartenenti a tutte le famiglie con caratteristiche molto simili.

1.6 *Lubrication*

Available oils are typically grouped into three major classes:
1) Mineral oils
2) Poly-Alpha-Olefin synthetic oils
3) Polyglycol synthetic oils

Oil is normally selected in accordance with environmental and operating conditions. Mineral oil is the appropriate choice for moderate load, non-continuous duty applications free from temperature extremes.
In severe applications, where gear units are to operate under heavy loads in continuous duty and high temperatures are expected, synthetic Poly-Alpha-Olefin oils (PAO) are the preferred choice.

Polyglycol oils (PG) should only be used in applications involving high sliding friction, as is the case with worm shafts. These particular oils should be used with great care, as they are not compatible with other oils, but are totally mixable with water. The oil mixed with water cannot be told from uncontamined oil, but will degrade very rapidly.

In addition to the oils mentioned above, there are food-grade oils. These are special oils harmless to human health for use in the food industry. Oils with similar characteristics are available from a number of manufacturers.

1.6 Schmierung

Die verfügbaren Öle gehören im Allgemeinen drei großen Familien an:
1) Mineralöle
2) Polyalphaolefine-Synthetiköle
3) Polyglykol-Synthetiköle

Die angemessene Wahl ist im Allgemeinen an die Einsatzbedingungen gebunden. Getriebe, die keinen besonders schweren Belastungen ausgesetzt sind und einem unregelmäßigen Einsatzzyklus unterliegen, ohne starke thermische Ausschläge, können problemlos mit Mineralöl geschmiert werden. Bei einem Einsatz unter harten Bedingungen, d.h. wenn die Getriebe stark und andauernd belastet werden, woraus sich ein sicherer Temperaturanstieg ergibt, sollten Synthetiköle, Typ Polyalphaolefine (PAO), verwendet werden.
Die Öle, Typ Polyglykole (PG), sind ausschließlich für einen Einsatz ausgelegt, bei denen es zu starken Reibungen zwischen den in Kontakt stehenden Elementen kommt, z.B. bei Schnecken. Bei ihrem Einsatz in besondere Aufmerksamkeit erforderlich, da sie nicht mit anderen Ölen kompatibel sind, sich jedoch vollständig mit Wasser vermischen lassen. Diese Tatsache erweist sich daher als besonders gefährlich, da sie sich nicht feststellen lässt, jedoch die Schmiereigenschaften des Öls bereits nach kurzer Zeit unterdrückt.
Über die bereits genannten Öle hinaus, gibt es auch Öle, die speziell für die Lebensmittelindustrie ausgelegt sind. Diese finden demzufolge dort ihren Einsatz, da es sich dabei um spezielle Produkte handelt, die für die Gesundheit unschädlich sind. Die den jeweiligen Familien angehörigen Ölsorten werden von verschiedenen Herstellern angeboten; sie weisen jeweils sehr ähnliche Eigenschaften auf.

1.6 Lubrificazione

La Tab. è utile per la selezione dei lubrificanti per riduttori da utilizzare in base alla loro stabilità alle varie temperature

1.6 *Lubrication*

The Table is useful for gearbox lubricant selection

1.6 Schmierung

Tabelle ist bei der Wahl des Schmiermittels nützlich.

Produttore *Manufacturer* Hersteller	Oli Minerali *Mineral oils* Mineralöle			Oli Sintetici Polialfaolefine (PAO) *Poly-Alpha-Olefin synthetic oils (PAO)* Polyalphaolefine- Synthetiköle (PAO)			Oli Sintetici Poliglicoli (PG) *Polyglycol synthetic oils(PG)* Polyglykol-Synthetiköle (PG)			
	ISO VG			ISO VG			ISO VG			
	220	320	460	150	220	320	150	220	320	460
Temp. ambiente *Amb. temp.* Umgebungstemperatur Tc [°C]	-5° ÷ 25°	0° ÷ 35°	10° ÷ 45°	-10° ÷ 25°	-5° ÷35°	0° ÷ 50°	-10° ÷ 25°	-5° ÷ 35°	0° ÷ 50°	10° ÷ 60°
AGIP	Blasia 220	Blasia 320	Blasia 460	-	Blasia SX 220	Blasia SX 320	Blasia S 150	Blasia S 220	Blasia S 320	Blasia S 320
ARAL	Degol BG 220 Plus	Degol BG 320 Plus	Degol BG 460 Plus	Degol PAS 150	Degol PAS 220	Degol PAS 320	Degol GS 150	Degol GS 220	Degol GS 320	Degol GS 460
BP	Energol GR-XP 220	Energol GR-XP 320	Energol GR-XP 460	Enersyn EPX 150	Enersyn EPX 220	Enersyn EPX 320	Enersyn SG 150	Enersyn SG-XP 220	Enersyn SG-XP 320	Enersyn SG-XP 460
CASTROL	Alpha SP 220	AlphaSP 320	AlphaSP 460	Alphasyn EP 150	Alphasyn EP 220	Alphasyn EP 320	Alphasyn PG 150	Alphasyn PG 220	Alphasyn PG 320	Alphasyn PG 460
CHEVRON	Ultra Gear 220	Ultra Gear 320	Ultra Gear 460	Tegra Synthetic Gear 150	Tegra Synthetic Gear 220	Tegra Synthetic Gear 320	HiPerSYN 150	HiPerSYN 220	HiPerSYN 320	HiPerSYN 460
ESSO	Spartan EP 220	Spartan EP 320	Spartan EP 460	Spartan S EP 150	Spartan S EP 220	Spartan S EP 320	Glycolube 150	Glycolube 220	Glycolube 320	Glycolube 460
KLÜBER	Klüberoil GEM 1-220	Klüberoil GEM 1-320	Klüberoil GEM 1-460	Klübersynth EG 4-150	Klübersynth EG 4-220	Klübersynth EG 4-320	Klübersynth GH 6-150	Klübersynth GH 6-220	Klübersynth GH 6-320	Klübersynth GH 6-460
MOBIL	Mobilgear XMP 220	Mobilgear XMP 320	Mobilgear XMP 460	Mobilgear SHC XMP150	Mobilgear SHC XMP220	Mobilgear SHC XMP320	Glygoyle 22	Glygoyle 30	Glygoyle HE320	Glygoyle HE460
MOLIKOTE	L-0122	L-0132		L-1115	L-1122	L-1132	-	-	-	-
OPTIMOL	Optigear BM 220	Optigear BM 320	Optigear BM 460	Optigear Synthetic A 150	Optigear Synthetic A 220	Optigear Synthetic A 320	Optiflex A 150	Optiflex A 220	Optiflex A 320	Optiflex A 460
Q8	Goya 220	Goya 320	Goya 460	El Greco 150	El Greco 220	El Greco 320	Gade 150	Gade 220	Gade 320	Gade 460
SHELL	OMALA S2 G 220	OMALA S2 G 320	OMALA S2 G 460	Omala S4 GX 150	Omala S4 GX 220	Omala S4 GX 320	OMALA S4 WE 150	OMALA S4 WE 220	OMALA S4 WE 320	OMALA S4 WE 460
TEXACO	Meropa 220	Meropa 320	Meropa 460	Pinnacle EP 150	Pinnacle EP 220	Pinnacle EP 320	-	Synlube CLP 220	Synlube CLP 320	Synlube CLP 460
TOTAL	Carter EP 220	Carter EP 320	Carter EP 460	Carter SH 150	Carter SH 220	Carter SH 320	Carter SY 150	Carter SY 220	Carter SY 320	Carter SY 460
TRIBOL	1100/220	1100/320	1100/460	1510/150	1510/220	1510/320	800\150	800\220	800\320	800\460
Lubrificanti sintetici per uso alimentare / *Food-grade synthetic lubricants* / Schmiermittel Synthetik für Lebensmittelbereich										
AGIP				Rocol Foodlube Hi-Torque 150	—	Rocol Foodlube Hi-Torque 320				
ESSO				—	Gear Oil FM 220	—				
KLÜBER				Klüberoil 4 UH1 N 150	Klüberoil 4 UH1 N 220	Klüberoil 4 UH1 N 320				
MOBIL				DTE FM 150	DTE FM 220	DTE FM 320				
FUCHS				Cassida Fluid GL 150	Cassida Fluid GL 220	Cassida Fluid GL 320				

Il principio di funzionamento di questi variatori è quello di trasmettere la coppia attraverso ruote di frizione: ciò comporta la scelta di un particolare tipo di lubrificante, capace di migliorare il rendimento e la durata dei componenti.
La tabella è utile per la scelta dei lubrificanti da adottare nei variatori.

The operation principle of this variators consists of torque trasmission by friction wheel: that means to chose a particular kind of oil, able to increase dynamic efficiency and guarantee longer component's duration.
The tab. is useful for variator lubricant selection

Das Betriebsprinzip dieser Variatoren besteht in der Übertragung des Drehmoments über Kupplungsräder. Daher ist eine besondere Wahl des Schmiermittels erforderlich, der den Wirkungsgrad sowie die Lebensdauer der Bestandteile erhöht.
Die Tabelle dient der Auswahl des Schmiermittels für die Variatoren.

Tab.1.9-Produttore *Manufacturer* Hersteller	Tipi di olio raccomandati / *Recommended oils* / Empfohlene Ölsorte		
	1°	2°	3°
AGIP	TRANSMISSION V.E	A.T.F. DEXRON FLUID	-
BP	AUTRAN DX	-	-
CASTROL	TQ DEXRON II	-	-
CHEVRON	A.T.F. DEXRON	-	-
ESSO	A.T.F. DEXRON	-	-
FINA	A.T.F. DEXRON	-	-
MOBIL	A.T.F. 220	-	-
SHELL	A.T.F. DEXRON	SPIRAX S1 ATF TASA	SPIRAX S2 ATF AX
Lubrificanti sintetici per uso alimentare / *Food-grade synthetic lubricants* / Schmiermittel Synthetik für Lebensmittelbereich			
SHELL	CASSIDA FLUIDS HF32	-	-

1.7 Limite termico

In determinate condizioni applicative è necessario (particolarmente per i riduttori a vite senza fine) verificare che la potenza assorbita dal riduttore o dal rinvio angolare non superi la potenza limite termico sotto descritta.
Il rendimento di un riduttore e di un rinvio angolare è dato dal rapporto fra potenza resa in uscita e quella in ingresso. La quota mancante, convertita in calore, deve essere ceduta o scambiata all'esterno per non compromettere il riduttore dal punto di vista termico. Quando l' applicazione prevede un funzionamento continuo, o una velocità di rotazione in entrata superiore a 1400 min^{-1}, o il tipo di carico pesante, si deve verificare che la potenza applicata al riduttore o rinvio angolare sia minore o uguale alla potenza del limite termico P_{tn}. Non si deve tenere conto di P_{tn} se il funzionamento è continuo per un massimo di due ore e con pause di durata sufficiente a ristabilire nel riduttore e/o rivio angolare la temperatura ambiente.

In Tab. 1.10 e tab. 1.11 sono riportati i valori P_{tn} della potenza massima applicabile ai riduttori a vite senza fine, vite senza fine con precoppia, coassiali, ortogonali, pendolari, paralleli e rinvii angolari in servizio continuo in aria libera a 30 °C.

I valori di Ptn devono essere corretti tramite i seguenti fattori:

1.7 Thermal capacity

In specific applications (in particular, as far as worm gearboxes) are concerned) check that the absorbed gearbox power does not exceed the below described limit thermal capacity .
Gearbox efficiency is given by the relation between output and input power. The missing quota, converted or exchanged in heat, has to be lost externally in order to avoid excessive temperatures inside the gearbox.
When the application requires a continuous duty or a rotational velocity of worm higher than 1400 min^{-1} or a heavy load, it is advisable to verify that power applied to the gearbox is less than or equal to thermal limit power P_{tn} .
P_{tn} must not be taken into consideration if duty is continuous for a maximum period of 2 hours and followed by an interval sufficient to restore the ambient temperature inside the gearbox.

In Table 1.10 and Table 1.11 is indicated maximum power P_{tn} to be applied to worm gearboxes, helical worm gearboxes, in-line gearboxes, helical bevel gearboxes, parallel shaft gearboxes and shaft mounted gearboxes in continuous duty operating in an external ambient at 30°C.

Ptn values must be corrected through the following factors:

1.7 Thermische Belastbarkeit

Bei besonderen Anwendungen ist darauf zu achten, daß die Leistungsaufnahme der Getriebe eine thermische Grenze nicht überschreitet (insbesondere bei Schneckengetrieben).
Der Gesamtwirkungsgrad der Getriebe ergibt sich aus dem Verhältnis zwischen Ausgangsleistung- und Eingangs . Der Leistungsverlust entsteht durch die vorhandene Reibung im Getriebe, welche in Wärme umgewandelt wird. Diese so entstandene Wärme wird, um eine Überhitzung des Getriebes zu vermeiden, über das Gehäuse nach außen abgegeben. Wenn das Getriebe im Dauerbetrieb mit einer Eingangsdrehzahl von mehr als 1400 min^{-1} oder unter starker Belastung laufen soll, so ist zu prüfen, ob die für das Getriebe vorgeschriebene thermische Leistungsgrenze P_{tn} nicht überschritten wird. Der P_{tn}-Wert kann vernachlässigt werden, falls der kontinuierliche Betrieb max. 2 Stunden dauert und ausreichend Pausen erfolgen, die ein Abkühlen des Getriebes auf normale Raumtemperatur ermöglichen.
In Tabelle 1.10 und Tabelle 1.11 sind die P_{tn}-Werte der maximalen Leistung aller Getriebe für kontinuierlichen Betrieb bei freier Luftzufuhr und einer Raumtemperatur von 30°C angegeben.

Die Ptn-Werte müssen mit folgenden Faktoren korrigiert werden:

Tab. 1.12

Potenza limite termico corretta / *Corrected limit thermal capacity* / Korrigierte thermische Leistungsgrenze

P tc = Ptn x ft x fa x fu x fl

ft	Fattore di temperatura ambiente *Ambient temperature factor* Raumtemperaturfaktor	ta: Temperatura ambiente / *Ambient temperature* / Raumtemperatur

ta	10°	15°	20°	25°	30°	35°	40°	45°	50°
ft	**1.30**	**1.23**	**1.15**	**1.08**	**1**	**0.92**	**0.84**	**0.76**	**0.68**

fa	Fattore di aerazione *Aeration factor* Belüftungsfaktor	**1** Riduttore non ventilato / *Non ventilated gearbox* / Nicht belüftetes Getriebe **1.4** Riduttore con ventilazione / *Gearbox with forced ventilation* / Getriebe mit Belüftung
fu	Fattore di utilizzo *Duty factor* Benutzungsfaktor	Dt: Minuti di funzionamento in un'ora / *Minutes of operation in one hour* / Einsatzdauer pro Std. (in Min.)

Dt	10	20	30	40	50	60
fu	**1.7**	**1.4**	**1.25**	**1.15**	**1.08**	**1**

fl	Fattore di lubrificazione *Lubrication factor* Schmierungsfaktor	**0.9** Olio minerale / *Mineral oil* / Mineralöl **1.0** Olio sintetico / *Synthetic oil* / Synthetisches Öl

1.7 Limite termico — *1.7 Thermal capacity* — 1.7 Thermische Belastbarkeit

POTENZA LIMITE TERMICO / *THERMAL LIMIT POWER* / THERMISCHE LEISTUNGSGRENZE

Tab. 1.10

P_{tn} [kW]

URW	n_1 [min^{-1}]	ir 5	7	7.5	10	11	15	19.5	20	25	28	29.5	30	40	49	50	56	57	60	69	70	79	80	98	100
25*	2800	-	-	0.58	0.52	-	0.45	-	0.39	0.32	-	-	0.32	0.27	-	0.25	-	-	0.24	-	-	-	0.20	-	0.19
28*	2800	-	0.58	-	0.52	-	0.45	-	0.39	-	0.32	-	-	0.27	0.25	-	0.24	-	-	-	0.22	-	0.20	-	0.19
30*	2800	-	-	0.58	0.52	-	0.45	-	0.39	0.32	-	-	0.32	0.27	-	0.25	-	-	0.24	-	-	-	0.20	-	0.19
40	2800	1.11	0.98	0.98	0.88	-	0.73	-	0.62	0.51	0.51	-	0.51	0.42	0.39	0.39	0.36	-	0.36	-	0.31	-	0.30	-	0.30
	1400	1.11	0.98	0.98	0.88	-	0.73	-	0.62	0.51	0.51	-	0.51	0.42	0.39	0.39	0.36	-	0.36	-	0.31	-	0.30	-	0.30
	900	0.98	0.88	0.88	0.79	-	0.67	-	0.56	0.46	0.46	-	0.46	0.38	0.36	0.36	0.34	-	0.34	-	0.30	-	0.28	-	0.28
	500	0.93	0.83	0.83	0.76	-	0.62	-	0.51	0.43	0.43	-	0.43	0.36	0.33	0.33	0.31	-	0.31	-	0.27	-	0.26	-	0.27
50	2800	1.74	1.52	1.52	1.35	-	1.22	-	1.01	0.81	0.81	-	0.81	0.71	0.66	0.66	0.61	-	0.61	-	0.55	-	0.50	-	0.47
	1400	1.74	1.52	1.52	1.35	-	1.22	-	1.01	0.81	0.81	-	0.81	0.71	0.66	0.66	0.61	-	0.61	-	0.55	-	0.50	-	0.47
	900	1.62	1.43	1.43	1.28	-	1.16	-	0.93	0.74	0.74	-	0.74	0.66	0.59	0.59	0.55	-	0.55	-	0.51	-	0.46	-	0.43
	500	1.52	1.35	1.35	1.16	-	1.06	-	0.84	0.68	0.68	-	0.68	0.59	0.54	0.54	0.52	-	0.52	-	0.47	-	0.43	-	0.41
63	2800	2.47	2.16	2.16	2.03	-	1.73	-	1.50	1.19	1.19	-	1.19	1.05	0.96	0.96	0.91	-	0.91	-	0.82	-	0.77	-	0.70
	1400	2.47	2.16	2.16	2.03	-	1.73	-	1.50	1.19	1.19	-	1.19	1.05	0.96	0.96	0.91	-	0.91	-	0.82	-	0.77	-	0.70
	900	2.47	2.16	2.16	1.82	-	1.57	-	1.38	1.08	1.08	-	1.08	0.96	0.89	0.89	0.82	-	0.82	-	0.75	-	0.70	-	0.65
	500	2.30	2.03	2.03	1.73	-	1.44	-	1.23	0.99	0.99	-	0.99	0.86	0.80	0.80	0.75	-	0.75	-	0.69	-	0.65	-	0.61
70	2800	-	2.54	-	2.24	-	1.90	-	1.65	-	1.31	-	-	1.15	1.06	-	1.00	-	-	-	0.88	-	0.83	-	0.78
	1400	-	2.54	-	2.24	-	1.90	-	1.65	-	1.31	-	-	1.15	1.06	-	1.00	-	-	-	0.88	-	0.83	-	0.78
	900	-	2.38	-	2.11	-	1.73	-	1.52	-	1.19	-	-	1.06	0.95	-	0.91	-	-	-	0.83	-	0.76	-	0.72
	500	-	2.24	-	1.90	-	1.58	-	1.36	-	1.06	-	-	0.95	0.86	-	0.83	-	-	-	0.75	-	0.70	-	0.67
75	2800	-	2,84	2,84	2,57	-	2,21	-	2,04	1,56	1,56	-	1,56	1,40	1,28	1,28	1,26	-	1,26	-	1,11	-	1,03	-	0,96
	1400	-	2,65	2,65	2,41	-	2,04	-	1,81	1,40	1,40	-	1,40	1,24	1,12	1,12	1,11	-	1,11	-	0,97	-	0,90	-	0,83
	900	-	2,49	2,49	2,27	-	1,85	-	1,66	1,26	1,26	-	1,26	1,14	1,02	1,02	1,00	-	1,00	-	0,89	-	0,83	-	0,77
	500	-	2,34	2,34	2,04	-	1,69	-	1,47	1,12	1,12	-	1,12	1,02	0,93	0,93	0,90	-	0,90	-	0,81	-	0,77	-	0,70
85	2800	-	3.38	-	3.17	-	2.67	-	2.42	-	1.81	-	-	1.64	1.45	-	1.49	-	-	-	1.30	-	1.21	-	1.08
	1400	-	3.38	-	3.17	-	2.67	-	2.42	-	1.81	-	-	1.64	1.45	-	1.49	-	-	-	1.30	-	1.21	-	1.08
	900	-	3.17	-	2.98	-	2.42	-	2.21	-	1.64	-	-	1.49	1.34	-	1.34	-	-	-	1.18	-	1.10	-	1.01
	500	-	2.98	-	2.67	-	2.21	-	1.95	-	1.45	-	-	1.34	1.21	-	1.21	-	-	-	1.08	-	1.01	-	0.91
90	2800	-	4,19	4,19	3,91	-	3,35	-	3,17	2,44	2,44	-	2,44	2,17	2,02	2,02	1,99	-	1,99	-	1,78	-	1,65	-	1,48
	1400	-	4,04	4,04	3,78	-	3,17	-	2,93	2,21	2,21	-	2,21	1,99	1,78	1,78	1,80	-	1,80	-	1,56	-	1,47	-	1,30
	900	-	3,78	3,78	3,55	-	2,86	-	2,66	1,99	1,99	-	1,99	1,78	1,63	1,63	1,58	-	1,58	-	1,41	-	1,33	-	1,21
	500	-	3,55	3,55	3,17	-	2,61	-	2,34	1,78	1,78	-	1,78	1,61	1,47	1,47	1,43	-	1,43	-	1,27	-	1,21	-	1,10
110	2800	-	5.95	5.95	5.56	-	4.63	-	4.39	3.33	3.33	-	3.33	2.98	2.69	2.69	2.69	-	2.69	-	2.32	-	2.19	-	1.94
	1400	-	5.95	5.95	5.56	-	4.63	-	4.39	3.33	3.33	-	3.33	2.98	2.69	2.69	2.69	-	2.69	-	2.32	-	2.19	-	1.94
	900	-	5.56	5.56	5.21	-	4.17	-	3.97	2.98	2.98	-	2.98	2.60	2.45	2.45	2.32	-	2.32	-	2.08	-	1.98	-	1.77
	500	-	5.21	5.21	4.63	-	3.79	-	3.47	2.69	2.69	-	2.69	2.38	2.19	2.19	2.08	-	2.08	-	1.85	-	1.77	-	1.63
130	2800	-	9.05	9.05	8.35	-	6.78	-	6.39	4.52	4.52	-	4.52	4.02	3.62	3.62	3.50	-	3.50	-	3.29	-	3.02	-	2.65
	1400	-	9.05	9.05	8.35	-	6.78	-	6.39	4.52	4.52	-	4.52	4.02	3.62	3.62	3.50	-	3.50	-	3.29	-	3.02	-	2.65
	900	-	8.35	8.35	7.24	-	6.39	-	6.03	4.34	4.34	-	4.34	3.74	3.50	3.50	3.39	-	3.39	-	2.86	-	2.71	-	2.41
	500	-	6.78	6.78	6.39	-	5.43	-	4.72	3.50	3.50	-	3.50	3.10	2.93	2.93	2.86	-	2.86	-	2.58	-	2.47	-	2.22
150	2800	-	12.40	12.40	11.45	-	9.92	-	9.30	6.20	6.20	-	6.20	5.95	5.51	5.51	5.51	-	5.51	-	4.51	-	4.38	-	3.92
	1400	-	12.40	12.40	11.45	-	9.92	-	9.30	6.20	6.20	-	6.20	5.95	5.51	5.51	5.51	-	5.51	-	4.51	-	4.38	-	3.92
	900	-	11.45	11.45	10.63	-	8.75	-	8.27	5.72	5.72	-	5.72	5.51	4.80	4.80	4.65	-	4.65	-	4.02	-	3.92	-	3.54
	500	-	10.63	10.63	9.30	-	7.83	-	7.09	5.13	5.13	-	5.13	4.51	4.25	4.25	4.13	-	4.13	-	3.63	-	3.46	-	3.24
180	2800	-	18.86	-	17.29	-	14.82	-	12.96	-	9.88	-	-	8.30	7.98	-	7.68	-	-	-	6.48	-	6.29	-	5.61
	1400	-	18.86	-	17.29	-	14.82	-	12.96	-	9.88	-	-	8.30	7.98	-	7.68	-	-	-	6.48	-	6.29	-	5.61
	900	-	17.29	-	15.96	-	13.83	-	12.20	-	9.02	-	-	7.68	7.41	-	7.15	-	-	-	6.10	-	5.93	-	5.32
	500	-	14.82	-	13.83	-	11.52	-	10.37	-	7.68	-	-	6.69	6.10	-	6.10	-	-	-	5.32	-	5.06	-	4.51
215	2800	-	25,62	-	23,29	-	21,35	19,71	-	-	18,30	-	-	13,48	-	11,65	-	10,67	-	10,67	-	-	8,54	-	8,54
	1400	-	25,62	-	23,29	-	21,35	18,30	-	-	17,08	-	-	12,20	-	10,67	-	9,85	-	9,85	-	-	8,01	-	8,01
	900	-	23,29	-	21,35	-	19,71	17,08	-	-	16,01	-	-	11,14	-	9,85	-	8,83	-	8,83	-	-	7,12	-	7,12
	500	-	18,30	-	17,08	-	15,07	13,48	-	-	11,65	-	-	8,83	-	8,54	-	6,92	-	6,92	-	-	5,96	-	5,96
250	2800	-	39,74	-	-	36,12	36,12	-	28,38	-	-	26,49	-	19,87	18,06	-	-	-	17,28	-	14,19	13,25	-	13,25	-
	1400	-	39,74	-	-	36,12	36,12	-	28,38	-	-	24,83	-	18,92	17,28	-	-	-	16,56	-	13,70	12,82	-	12,82	-
	900	-	36,12	-	-	36,12	33,11	-	26,49	-	-	23,37	-	17,28	15,89	-	-	-	15,28	-	12,42	12,04	-	12,04	-
	500	-	28,38	-	-	26,49	24,83	-	19,87	-	-	18,06	-	13,70	12,82	-	-	-	12,04	-	10,19	9,93	-	9,93	-

* Per la grandezza 25,28,30 con n_1<2800 min^{-1} i valori non sono significativi perchè il limite termico è notevolmente superiore a quello meccanico.

** The above data are not valid for size 25,28,30 with n_1<2800 min^{-1} since the thermal limit is much higher than the mechanical one.*

* Für die Größe 25,28,30 ist die thermische Grenze nicht relevant, da diese wesentlich höher ist als die mechanische Grenze.

1.7 Limite termico

1.7 Thermal capacity

1.7 Thermische Belastbarkeit

Tab. 1.11 **POTENZA LIMITE TERMICO / *THERMAL LIMIT POWER* / THERMISCHE LEISTUNGSGRENZE**
P_{tn} [kW]

CR CB	n_1 [min^{-1}]	ir																		
40		**44.3**	**50.5**	**58.2**	**68**	**82.7**	**108.7**	**126.9**	**165.1**	**222.1**	**295.2**	**336.8**	**388.2**	**453**						
	2800	0.72	0.72	0.72	0.72	0.51	0.49	0.49	0.39	0.38	0.31	0.31	0.31	0.31						
	1400	0.67	0.67	0.67	0.67	0.47	0.47	0.47	0.36	0.36	0.30	0.30	0.30	0.30						
	900	0.67	0.59	0.59	0.59	0.47	0.42	0.42	0.33	0.33	0.30	0.28	0.28	0.28						
50		**48.3**	**52.1**	**61**	**73.3**	**90.2**	**97.2**	**113.9**	**170.1**	**199.3**	**261.9**	**289.5**	**347**	**406.7**	**590.9**					
	2800	1.20	1.20	1.20	0.81	0.81	0.81	0.79	0.66	0.64	0.48	0.64	0.48	0.48	0.48					
	1400	1.10	1.10	1.10	0.74	0.74	0.74	0.74	0.60	0.60	0.45	0.60	0.45	0.45	0.45					
	900	1.02	1.02	1.02	0.74	0.66	0.66	0.66	0.54	0.54	0.45	0.54	0.42	0.42	0.42					
70		**44.3**	**50.8**	**59.1**	**69.6**	**82.6**	**110.3**	**130**	**166.1**	**227.5**	**295**	**302.9**	**338.9**	**393.8**	**464.3**	**618.2**				
	2800	1.79	1.79	1.79	1.79	1.30	1.26	1.26	1.05	1.00	0.79	0.79	0.79	0.78	0.78	0.78				
	1400	1.65	1.65	1.65	1.65	1.16	1.16	1.16	0.95	0.95	0.74	0.74	0.74	0.74	0.74	0.74				
	900	1.65	1.48	1.48	1.48	1.16	1.02	1.02	0.84	0.84	0.74	0.74	0.67	0.67	0.67	0.67				
85		**43**	**51.3**	**59.1**	**69**	**80.2**	**110.4**	**128.8**	**167.6**	**225.4**	**286.4**	**342.1**	**394.1**	**460**						
	2800	2.39	2.39	2.39	2.39	1.72	1.67	1.67	1.41	1.37	1.08	1.08	1.04	1.04						
	1400	2.20	2.20	2.20	2.20	1.53	1.53	1.53	1.28	1.28	0.96	0.96	0.96	0.96						
	900	2.20	1.96	1.96	1.96	1.53	1.31	1.31	1.12	1.12	0.96	0.89	0.89	0.89						
110		**43**	**51.3**	**59.1**	**69**	**80.2**	**110.4**	**128.8**	**167.6**	**225.4**	**286.4**	**342.1**	**394.1**	**460**						
	2800	4.16	4.16	4.16	4.16	3.16	3.16	3.16	2.61	2.54	1.91	1.91	1.87	1.87						
	1400	3.81	3.81	3.81	3.81	2.86	2.86	2.86	2.35	2.35	1.76	1.76	1.76	1.76						
	900	3.81	3.39	3.39	3.39	2.86	2.41	2.41	2.03	2.03	1.76	1.55	1.55	1.55						
130		**40,4**	**50,4**	**57,7**	**72,0**	**85,3**	**115,4**	**144,0**	**161,5**	**201,6**	**230,8**	**288,0**	**323,1**	**403,2**	**504,0**	**576,0**	**720,0**			
	2800	5,61	5,34	5,34	5,10	4,32	4,16	4,01	3,21	3,12	2,95	2,88	2,74	2,67	2,44	2,34	2,16			
	1400	5,10	5,10	4,88	4,67	4,01	3,87	3,74	2,95	2,88	2,67	2,61	2,55	2,44	2,24	2,20	2,00			
	900	4,67	4,49	4,32	4,16	3,51	3,40	3,30	2,61	2,55	2,39	2,34	2,24	2,20	2,04	2,00	1,84			
150		**40,4**	**50,4**	**57,7**	**72,0**	**85,3**	**115,4**	**144,0**	**161,5**	**201,6**	**230,8**	**288,0**	**323,1**	**403,2**	**504,0**	**576,0**	**720,0**			
	2800	7,79	7,40	7,05	7,05	6,17	5,92	5,69	4,49	4,35	4,11	3,90	3,80	3,70	3,29	3,15	2,96			
	1400	7,05	6,73	6,44	6,44	5,48	5,29	5,11	4,00	3,90	3,70	3,61	3,53	3,37	3,02	2,96	2,74			
	900	6,73	6,44	6,17	5,92	5,29	4,94	4,94	3,80	3,70	3,53	3,44	3,29	3,22	2,90	2,79	2,64			
180		**37,3**	**52,5**	**62,0**	**75,0**	**85,0**	**106,7**	**124,0**	**150,0**	**173,6**	**213,3**	**248,0**	**261,3**	**303,8**	**367,5**	**420,0**	**434,0**	**525,0**	**600,0**	**750,0**
	2800	10,75	10,75	10,21	9,72	8,51	8,17	8,17	7,85	6,38	5,83	5,67	5,52	5,37	5,24	5,24	4,75	4,64	4,44	4,08
	1400	10,21	9,72	9,28	8,88	7,85	7,56	7,29	7,29	5,83	5,24	5,11	4,98	4,86	4,75	4,75	4,35	4,25	4,17	3,78
	900	9,28	9,28	8,88	8,51	7,29	7,04	7,04	6,81	5,52	4,98	4,86	4,75	4,64	4,54	4,54	4,17	4,08	3,93	3,65
215		**42,5**	**53,3**	**62,0**	**75,0**	**80,0**	**112,5**	**120,9**	**146,3**	**173,6**	**213,3**	**248,0**	**266,7**	**300,0**	**375,0**	**427,8**	**517,5**	**600,0**	**750,0**	
	2800	13,19	13,19	12,53	12,53	11,93	11,39	10,44	10,44	6,77	7,83	7,59	7,16	7,37	6,77	6,42	6,26	5,33	5,33	
	1400	11,93	11,93	11,39	11,39	10,44	10,02	9,64	9,28	6,77	6,96	6,77	6,42	6,59	6,11	5,83	5,69	4,91	4,91	
	900	10,89	10,89	10,89	10,44	10,02	9,64	8,95	8,64	6,77	6,59	6,42	5,97	6,26	5,83	5,45	5,33	4,73	4,73	
250		**38,5**	**52,5**	**61,9**	**77,5**	**90,0**	**108,8**	**120,0**	**145,0**	**177,0**	**206,7**	**240,0**	**290,0**	**360,0**	**435,0**	**507,5**	**572,8**	**710,5**		
	2800	21,05	19,95	19,95	18,95	18,95	18,05	15,79	15,79	14,58	11,84	11,48	11,48	10,53	10,24	8,81	8,42	8,42		
	1400	18,95	18,05	18,05	17,23	17,23	17,23	14,58	14,58	13,53	10,83	10,53	10,53	9,72	9,24	8,06	7,73	7,73		
	900	18,05	17,23	17,23	16,48	16,48	16,48	14,04	13,53	12,63	10,24	10,24	10,24	9,24	8,81	7,73	7,43	7,15		

Tab. 1.11 **POTENZA LIMITE TERMICO / *THERMAL LIMIT POWER* / THERMISCHE LEISTUNGSGRENZE**
P_{tn} [kW]

Z	n_1 [min^{-1}]	ir tutti i rapporti *all ratios* alle Untersetzungen
12	**2800**	1.5
19	**2800**	3.0
24	**2800**	6.0
32	**2800**	10.0
38	**2800**	16.0
42	**2800**	20.0
55	**2800**	35.0
75	**2800**	60.0

1.8 Scelta

Per la scelta del motoriduttore, detta T_2' (Nm) la coppia nominale dell'utilizzatore, si calcola la potenza in ingresso al riduttore con la formula:

1.8 Selection

In order to make the appropriate selection of the gear motor, input power has to be calculated according to the following formula:

1.8 Wahl

Bei der Wahl des Getriebemotors wird die erforderliche Leistung am Getriebeeingang mit folgender Formel berechnet:

$$P' = (kW) = \frac{T_2' \times n_2}{9550 \times RD}$$

dove T_2' (Nm) rappresenta la coppia nominale richiesta dall'applicazione.

where T_2' (Nm) represents the nominal torque requested by the application.

wobei T_2' (Nm) das für die Anwendung erforderliche Nenndrehmoment ist.

1.8 Scelta

Noti P' e n_2 scegliere, utilizzando le tabelle delle prestazioni dei motoriduttori, il motoriduttore per il quale $P_1 \geq P'$. Verificare che il fattore di servizio FS' del motoriduttore sia maggiore o uguale di quello dell'applicazione (FS) altrimenti scegliere un motoriduttore della grandezza superiore possibilmente mantenendo invariata la P_1. Segue la verifica di carichi radiali, assiali e del limite termico (dove previsto).
Per la scelta del riduttore e rinvii angolari si parte dalla coppia T_2' richiesta dall'utilizzatore e dalla velocità richiesta in uscita n_2 per un dato valore di n_1 (min^{-1}). Dalle tabelle delle prestazioni dei riduttori e/o dei rinvii angolari, si adotterà quel riduttore o rinvio angolare per il quale il prodotto $T_2' \times FS$ sarà minore o uguale a T_{2M}, dove FS è il fattore di servizio dell'applicazione. Segue la verifica di carichi radiali, assiali e del limite termico (dove previsto).
La scelta del variatore può essere eseguita tramite le seguenti alternative:
calcolo dell'applicazione, misura diretta della potenza assorbita su analoga applicazione, confronto con applicazioni esistenti.
Una volta determinata la coppia necessaria per l'applicazione occorre consultare le tabelle di selezione dei variatori nel paragrafo 1.7-G.
Nel caso del variatore di velocità occorre prestare attenzione alla misura della potenza assorbita tramite rilevamento elettrico in quanto questo tipo di misura è attendibile solo nel caso dei giri massimi.
Nel campo dei giri minimi il rilevamento elettrico non determina il giusto dimensionamento in quanto, se l'applicazione è corretta, l'assorbimento rilevato sarà sempre molto inferiore a quello di targa del motore elettrico e pertanto non rilevabile da termiche o altre sicurezze elettriche.
Le condizioni di funzionamento che rendono precaria, e comunque sempre da valutare con molta attenzione, l'applicazione del variatore sono le seguenti:
— avviamenti: il numero massimo di avviamenti è funzione del tipo di applicazione, indicativamente non deve superare i 8 - 10 al 1' e comunque per casi particolari occorre contattare il ns. servizio tecnico.
— inerzie: nei casi si debbono avviare o fermare elevate masse senza l'interposizione di un riduttore, occorre contattare il ns. servizio tecnico.

Nella scelta del variatore occorre considerare un opportuno fattore di servizio (FS) rilevabile nel paragrafo 1.3. Il fattore di servizio è da applicare sulla coppia nominale sopportabile dal variatore.

M_2 (variatore) $\geq$ M_2 (applicazione) x FS

Attenzione: si ricorda che i prodotti STM non sono dispositivi di sicurezza.

1.8 Selection

Once P' and n_2 are known, the gear motor must be selected referring the performance tables where $P_1 \geq P'$. It is also important to make sure that the service factor FS' of the gear motor is equal or higher than the one of the application (FS) otherwise a bigger size of the gear motor has to be selected keeping P_1 unchanged. Then the check of radial, axial loads and the thermal capacity (where applicable) follows. In order to select the right gearbox, the torque T_2' required by the user and the output speed n_2 for a certain value of n_1 (min^{-1}) must be taken into consideration. Given the above values, select the corresponding gearbox referring to the tables of the gearbox performance where $T_2' \times FS$ is lower or equal to T_{2M} where FS is the application service factor.
Then check the axial and radial loads and the thermal capacity (where applicable).
There are many ways of choosing the right variator for the job:
technical specifications can be calculated for the applcation in hand; absorbed power can be directly measured on similar applications; or simple comparisons can be made with existing applications.
Once you have determined an application's torque requirements, simply refer to the tables on chapter 1.7-G.
Take particular care when using measuring absorbed power electrically for the purposes of choosing a variator. Electrical measurements are only reliable at maximum speed. At low speeds electrical measurements do not determine correct variator size because, if the application is correctly calculated, absorbed power is much lower than the rating on the electric motor's data plate, and is not therefere likely to have any effect on thermal cutouts or other electrical protection devices. The following operating conditions are the most critical for variator functioning and must therefore be examined with the greatest care:
— Starts: The maximum number of starts depends on the type of applcation. Approximately, this figure must not exceed 8 - 10 per minute. Contact our Technical Service if you have any special requirements.
— Inertia: Contact our Technical Service if high mass machanical parts have to be standard or stopped without a gear reducer being installed between the variator and the part.
When choosing a variator, always allow for a sufficient service factor (see chapter 1.3. The service factor must be applied to the variator's rated torque value.

M_2 (variator) $\geq$ M_2 (application) x FS

Attention: STM products are not safety devices.

1.8 Wahl

Nachdem P' und n_2 nun bekannt sind, wählt man (mit Hilfe der Leistungstabellen der Getriebemotoren) den Getriebemotor, bei dem $P_1 \geq P'$ ist. Hierbei muß sichergestellt sein, daß der Betriebsfaktor FS' des Getriebemotors höher ist als der Anwendungsfaktor (FS), da sonst ein größerer Getriebemotor gewählt werden muß, wobei P_1 nach Möglichkeit gleich bleiben soll. Anschließend sind die Radial-und Axialbelastungen sowie die thermische Grenze (wenn notwendig) zu prüfen.
Bei der Wahl eines Getriebes geht man von folgenden Werten aus, die vom Anwender vorgegeben werden: Drehmoment T_2' und Abtriebsdrehzahl n_2 für einen bestimmten Wert von n_1 (min^{-1}). Aus den Getriebe-Leistungstabellen wird dann das Getriebe ausgewählt, für das das Produkt $T_{2'} \times FS$ kleiner oder gleich T_{2M} ist, wobei FS der Betriebsfaktor der Anwendung ist.
Danach sind die Radial-und Axialbelastungen sowie die thermische Grenze (wenn notwendig) zu prüfen.
Die Auswahl der jeweils geeigneten Verstellgetriebe kann nach folgenden Maßstäben vorgenommen werden:
Berechnung der Anwendung, direkte Messung der Leistungsaufnahme bei ähnlichem Einsatz.
Vergleich mit bereits bestehenden Anwendungen, Nach Ermittlung des einsatzspezifischen Drehmomentes wird die Auswahl der Verstellgetriebe mit Hilfe der Übersichten durchgeführt (Kapital 1.7-G).
Bei Verstellgetrieben ist die elektrische Messung der Leistungsaufnahme nur bei maximaler Abtriebsdrehzahl zulässig. Bei niedriger bis minimaler Drehzahl gestattet die Messung der Stromaufnahme nicht die Größnauslegung des Getriebes, weil auch im Falle einer richtigen Anwendung der eremittelte Wert weit unter der Leistungsschild des E-Motors liegt, und weder von Schutzschaltern noch anderen elektrischen Sicherheiten erfaßt wird. Die für den Einsatz der Verstellgetriebe kritischen bzw. mit größter Sorgfalt zu erwägenden Betriebsbedingungen sind:
— Einschalten: Die maximale Schalthäufigkeit ist je nach Anwendung verschieden, sollte aber auf 8 bis 10 innerhalb einer Minute begrenzt werden. Bei besonderen Anforderungen bitte mit unserem technischen Büro Rücksprache nehmen.
— Trägheitsmomente: Unser technisches Büro gibt gern Auskunft, wenn große Massen angetrieben bzw. abgebremst werden sollen.

Zur Auswahl der Verstellgetriebe ist außerdem der geschilderte Betriebsfaktor maßgeblich (Kapitel 1.3.
Der Betriebsfaktor des Anwendungsfalls ist in Relation zum folgenden Quotienten zu setzen.

M_2 (verstellgetriebe) $\geq$ M_2 (Anwendung) x FS

Achtung: STM-Produkte sind nicht für sicherheitstechnische Anwendungen konzipiert.

1.8 Scelta

1.9 Prestazioni riduttori e rinvii angolari

Nelle tabelle delle prestazioni dei riduttori e rinvii angolari sono riportati i seguenti fattori:

ir Rapporto di riduzione
n_1 Velocità di rotazione dell'albero in entrata (min^{-1})
n_2 Velocità di rotazione in uscita (min^{-1})
T_{2M} Coppia massima ottenibile con FS = 1 (Nm)
RD% Rendimento dinamico

P Potenza nominale in entrata (kW)
IEC Motori accoppiabili

1.8 Selection

1.9 Gearboxes performances

In the performance tables the following factors are listed:

ir Reduction ratio
n_1 Input speed (min^{-1})

n_2 Output speed (min^{-1})
T_{2M} Maximum torque obtainable with FS = 1 (Nm)
RD% *Dymamic efficiency*

P Nominal input power (kW)
IEC Motor options

1.8 Wahl

1.9 Leistungen der Getriebe

In den Leistungstabellen sind folgende Faktoren angegeben:

ir Untersetzungsverhältnis
n_1 Drehzahl der Antriebswelle (min^{-1})

n_2 Drehzahl der Abtriebswelle (min^{-1})
T_{2M} Maximales Drehmoment bei FS = 1 (Nm)
RD% Dynamischer Wirkungsgrad

P Nennleistungen (kW)
IEC Kompatible Motoren

Tipo / *Type* / Typ

Esempio / *Example* / Beispiel

Peso / *Weight* / Mass

UI 40 — Kg 1.4

ir	n_1 = 2800 min^{-1}				n_1 = 1400 min^{-1}				n_1 = 900 min^{-1}				n_1 = 500 min^{-1}				IEC
	n_2 min^{-1}	T_{2M} Nm	P kW	RD %	n_2 min^{-1}	T_{2M} Nm	P kW	RD %	n_2 min^{-1}	T_{2M} Nm	P kW	RD %	n_2 min^{-1}	T_{2M} Nm	P kW	RD %	
7	400	11	0.56	83	200	15	0.39	81	129	18	0.31	79	71	22	0.21	78	63-56-50
10	280	13	0.47	81	140	17	0.32	79	90	20	0.24	77	50	24	0.17	76	
15	187	14	0.35	78	93	18	0.23	75	60	20	0.17	73	33	24	0.12	71	
20	140	12	0.23	75	70	15	0.15	72	45	18	0.12	69	25	21	0.08	67	
28	100	15	0.23	69	50	19	0.16	64	32	21	0.12	61	17.9	25	0.08	58	
40	70	13	0.15	64	35	16	0.10	59	23	18	0.08	56	12.5	21	0.05	53	

1.10 Prestazioni motoriduttori e motovariatori

Nelle Tabelle delle prestazioni dei motoriduttori e motovariatori sono riportati i seguenti fattori:

ir rapporto di riduzione
P_1 potenza del motore trifase (kW)
Ptn Potenza limite termico (kW)
T_2 coppia erogata dal motoriduttore ottenuta tenendo conto del rendimento RD (Nm)
n_1 velocità di rotazione dell'albero in entrata (min^{-1})
n_2 velocità di rotazione in uscita (min^{-1})
FS' fattore di servizio del motoriduttore

1.10 Performances of gear motors and motovariators

In tables of gearmotors and motovariators performances the following factors are listed:

ir reduction ratio
P_1 power of threephase motor (kW)
Ptn *Limit thermal capacity (kW)*
T_2 output torque (Nm) of motorized gearbox taking the efficiency RD into consideration
n_1 Input speed (min^{-1})

n_2 output speed (min^{-1})
FS' service factor of gearmotors

1.10 Leistungen der Getriebemotoren und verstellgetriebemotoren

In den Leistungstabellen und verstellgetriebemotoren sind folgende Faktoren aufgeführt:

ir Untersetzungsverhältnis
P_1 Leistung des Drehstrommotors (kW)
Ptn Thermische Leistungsgrenze (kW)
T_2 Drehmoment am Getriebeausgang, unter Berücksichtigung des Wirkungsgrades RD (Nm)
n_1 Drehzahl der Antriebswelle (min^{-1})

n_2 Drehzahl der Abtriebswelle (min^{-1})
FS' Betriebsfaktor des Getriebemotors

Esempio motoriduttore / *Example gearmotor* / Beispiel Getriebemotors

n_2 min^{-1}	ir	T2 Nm	FS'		

P_1 — n_1 — Motore / *Motor* / Motor

0.09 Kw	n_1= 2740 min^{-1}	56A 2
	n_1= 1360 min^{-1}	56B 4
	n_1= 860 min^{-1}	63B 6

Esempio motovariatore / *Example motovariator* / Beispiel verstellgetriebemotoren

Tipo/*Type*/Typ

P_1	n_1	n_2 (min^{-1})		T_2 (Nm)		VM
kW	min^{-1}	max	min	max	min	
0.15	880	620	125	1.9	3.8	**VM 63**
0.22	1350	950	190	1.9	3.8	**VM 63**
0.25	1400	1000	190	2.0	6.0	**VM 71**

1.11 Verifiche

01 1) Geometria - Dimensioni
Compatibilità dimensionale con ingombri disponibili (es diametro del tamburo) e delle estremità d'albero con giunti,dischi o pulegge.

02 2) Numero massimo giri in entrata $n_{1\ max}$
Rappresenta il valore massimo accettabile per ogni grandezza di riduttore vedere paragrafo 1.2.

03 3) Carichi Radiali e assiali
Per il calcolo dei carichi radiale ed assiali applicati al riduttore si rimanda al paragrafo specifico all'interno della Sezione di prodotto.

04 4) Verifica Posizione di montaggio

05 5) Lubrificazione
Verificare che la quantità di olio sia conforme alla:
- taglia ;
- versione;

06 6) Potenza termica del riduttore:
Vedere paragrafo 1.7.

07 7) Condizioni di impiego:
7.1 - ta > 0 °C e < +50°C: vedere i punti 1.6;
7.2 - ta < -10 °C: contattare il nostro servizio tecnico-commerciale.

I riduttori, variatori e rinvii angolari STM forniti completi di lubrificante e non, possono essere utilizzati, salvo diverse indicazioni, in ambienti con temperature comprese fra 0 C° e + 50 C°. Per condizioni ambientali diverse consultare il ns. servizio tecnico.

08 8) Verifica peso motore elettrico:

Qualora il peso del motore elettrico installato sia maggiore dei valori riportati in tabella è necessario contattare il nostro servizio tecnico per verificare se l'installazione è idonea, considerando il peso del motore installato e il fattore di servizio dell'applicazione.

P_{KG} - peso motore elettrico

1.11 Verification

1) Geometry - Dimensions
Ensure that dimensions are compatible with space constraints (for instance, drum diameter) and shaft ends are compatible with any couplings, discs or pulleys to be used.

2) Input max rpm $n_{1\ max}$
It's the max acceptable value for each gearbox size look at 1.2.

3) Axial and overhung loads
Please refer to the paragraph about radial and axial load calculation applied to the gearbox in the Product Section

4) Check mounting position

5
) Lubrication
Verify if the oil quantity is corresponding to:
-size
-version

6)Gearbox thermal power:
Look at 1.7.

7) Using conditions:
7.1 - ta > 0 °C e < +50°C: look at points 1.6;
7.2 - ta < -10 °C: contact our techical sales dept.

STM gearboxes and variators, supplied oil filled or empty, can be used in rooms with a temperature from 0 C° and + 50 C°, if not otherwise indicated. In case of different ambient conditions, please contact our technical department.

8) Verify of the electric motor weight:

If the input weight electric motor is bigger than value in table , it will be necessary to contact our technical sales department to check the electric motor weight and the service factor of the installation.

P_{KG} - *Electric motor weight*

1.11 Überprüfungen

1) Geometrie-Abmessungen
Kompatibilität der Abmessungen mit verfügbaren Maßen (z.B. Trommeldurchmesser) und der Wellenenden mit den Kupplungen, Scheiben oder Riemenscheiben.

2) Maximale Antriebsdrehzahl in $n_{1\ max}$
Das ist der maximal zulässige Wert der Getriebegröße siehe Abschnitt 1.2.

3) Radiale und Axiale Belastung
Bezüglich der Berechung der radialen und axialen, am Getriebe applizierten Belastungskräfte verweisen wir auf den spezifischen Paragraph im Produktabschnitt.

4) Prüfen der Einbaulage

5) Schmierung
Überprüfen sie Ölmenge in Verbindung mit
- Getriebegröße
- Type

6) Thermische Belastung des Getriebes
Siehe Abschnitt 1.7.

7) Anwendungsbedingungen:
7.1 - ta > 0 °C e < +50°C: siehe Punkt 1.6;
7.2 - ta < -10 °C: bitte kontaktieren sie unsere technische Verkaufsabteilung.

STM getriebe, Verstellgetriebe und Kegelgetriebe, mit oder ohne Schmiermittelfüwung geliefert, sing geeignet für benützung - wenn nicht anders angegeben mit Umgebungstemperatur zwischen 0 °C und +50 °C. Bei anderen Raumtemperaturen wenden Sie sich bitte an unseren technischen Kundendienst.

8)Überprüfung des Elektromotorgewichtes:
Wenn der Gewicht von elektrische Antriebsmotor größer als die Werte in der Tabelle ist also, kontaktieren sie bitte unsere technische Verkaufsabteilung wegen Überprüfung von Gewicht und Servicefaktor.

P_{KG} - Gewicht E-Motor

IEC	50	56	63	71	80	90	100	112	132	160	180	200	225	250	280	315
P_{KG} max	3.9	5	8	11	15.6	24	33	47	83	150	214	263	344	450	682	1162

1.11 Verifiche

09 9) Massimo sovraccaric

Nel caso di avviamenti T_{2max} può essere considerata come quella parte della coppia accelerante (T_{2acc}) che passa attraverso l'asse lento del riduttore:

Avviamento

1.11 Verification

9) Determine maximum overload

For starting, T_{2max} may be considered as that portion of acceleration (T_{2acc}) passing through the gear unit output (low speed) shaft:

Starting

1.11 Überprüfungen

9) Maximale Überlast

Bei Anläufen kann T_{2max} als der Teil des Beschleunigungsmoments (T_{2acc}), der durch die Abtriebsachse des Getriebes läuft, angesehen werden:

Anlauf

$$T_{2max} = T_{2acc} = \left(\left(0.45 \cdot (T_{1s} + T_{1max}) \cdot ir \cdot \eta\right) - T_{2n}\right) \cdot \left(\frac{J}{J + J_0 \cdot \eta}\right) + T_{2n} \quad \textbf{[Nm]}$$

dove:

J: momento d'inerzia della macchina e del riduttore ridotto all'asse motore (kgm^2)
J_0: momento d'inerzia delle masse rotanti sull'asse motore (kgm^2)
T_{1s}: coppia motrice di spunto (Nm)
T_{1max}: coppia motrice max (Nm)

Where:
J: machine and gear unit inertial load reflected to motor shaft (kgm^2)
J_0: inertial load of rotating parts at motor shaft (kgm^2)
T_{1s}: starting torque (Nm)
T_{1max}: max drive torque (Nm)

Hier ist:
J: An der Motorachse reduziertes Trägheitsmoment der Maschine und des Getriebes (kgm^2)
J_0: Trägheitsmoment der an der Motorachse drehenden Massen (kgm^2)
T_{1s}: Anlaufantriebsdrehmoment (Nm)
T_{1max}: Max. Antriebsmoment (Nm)

E' necessario che sia soddisfatta la seguente relazione:

The following formula must be satisfied:

Folgende Bedingung muss erfüllt sein:

$$T_{2max} < 2xT_{2M}$$

10 10) Coppia frenatura-Motore Autofrenante

Nel caso di frenature T_{2max} può essere considerata come quella parte della coppia decelerante (T_{2dec}) che passa attraverso l'asse lento del riduttore:

10) Braking torque - Brake motor

For braking T_{2max} may be considered as that portion of deceleration torque (T_{2dec}) passing through the gear unit output (low speed) shaft:

10) Bremsmoment – Bremsmotor

Bei Bremsungen kann T_{2max} als der Teil des Beschleunigungsmoments Abbremsmoment (T_{2dec}), der durch die Abtriebsachse des Getriebes läuft, angesehen werden:

$$T_{2max} = T_{2dec} = \left(\left(\frac{T_{1f} \cdot ir}{\eta}\right) - T_{2n}\right) \cdot \left(\frac{J}{J + \frac{J_0}{\eta}}\right) + T_{2n} \quad \textbf{[Nm]}$$

dove:
J: momento d'inerzia della macchina e del riduttore ridotto all'asse motore (kgm^2)
J_0: momento d'inerzia delle masse rotanti sull'asse motore (kgm^2)
T_{1f}: coppia frenante dinamica (Nm)

Where:
J: machine and gear unit inertial load reflected to motor shaft (kgm^2)
J_0: inertial load of rotating parts at motor shaft (kgm^2)
T_{1f}: dynamic braking torque (Nm)

Hier ist:
J: An der Motorachse reduziertes Trägheitsmoment der Maschine und des Getriebes (kgm^2)
J_0: Trägheitsmoment der an der Motorachse drehenden Massen (kgm^2)
T_{1f}: dynamisches Bremsmoment (Nm)

Prima della messa in servizio del riduttore è necessario verificare la seguente relazione:

Before using the gearbox, it's necessary to verify the following formula:

Vor Verwendung des Motors ist nach unten stehender Formel sicherzustellen:

$$T_{2max} < 2xT_{2M}$$

Qualora la condizione non sia rispettatta è necessario provvedere alla regolazione della coppia di frenatura.

If the condition is not respected, it will be necessary to adjust the braking torque.

Wenn diese Bedingung nicht erreicht wird, ist es notwendig das Bremsmoment entsprechend einzustellen.

T_{2M} = Momento torcente nominale riduttore

T_{2M} = *Output nominal torque*

T_{2M} = Drehmoment Getriebe

1.12 Stato di fornitura

1.12.0 VERNICIATURA E PROTEZIONE

I riduttori sono verniciati esternamente con fondo epossidico e smalto sintetico blu RAL 5010, salvo disposizioni contrattuali diverse.

La protezione è idonea a resistere a normali ambienti industriali anche esterni, e a consentire finiture ulteriori con vernici sintetiche.

Per maggiori informazioni relative allo stato di fornitura vedere la tabella seguente

Caratteristiche della Vernice
Le caratteristiche della vernice utilizzata sono le seguenti: polvere termoindurente a base di resine poliesteri, modificate con resine epossiidiche.
A richiesta è possibile fornire:
1-Ciclo di verniciatura;
2-Le caratteristiche di spessore, durezza, resistenza alla corrosione;
3-Scheda tecnica della Polvere utilizzata.

Nel caso si prevedano condizioni ambientali particolarmente aggressive occorre adottare verniciature speciali
TYP0-TYP1-TYP2-TYP3-TYP4.

ATTENZIONE
In caso di verniciatura dei prodotti, si devono preservare da tale trattamento i piani lavorati e le tenute, al fine di evitare che la vernice ne alteri le caratteristiche chimico-fisiche e pregiudichi l'efficienza dei paraolio. Occorre analogamente preservare la targa di identificazione, e proteggere contro l'occlusione il tappo di livello dell'olio e il foro del tappo di sfiato (ove esistenti).

1.12 Scope of the supply

1.12.0 PAINTING AND PROTECTION

The gear units are externally painted with an epoxy primer and RAL 5010 blue epoxy enamel, unless different contractual instructions are given.

The protection is suitable to stand normal industrial environments, also outdoors, and allows additional synthetic paint finishes.

For further details about the supply conditions, please refer to the following table

Paint features
The features of the paint used are the following: thermosetting powder-coating based on polyesther resins, modified with epoxy resins.

On request , we can supply:
1-Painting cycle specs;
2-Specifications for thickness, hardness, resistance to corrosion;
3-Technical data sheet of the Powder coating used.
In case particularly aggressive environment conditions are expected, special paints will be needed **TYP0-TYP1-TYP2-TYP3-TYP4**.

ATTENTION
If the product must be painted, protect the machined surfaces and oil seals/gaskets in order to prevent any damage.
It is also necessary to protect the identification plate, the oil level plug (if fitted) and the hole in the breather plug (if fitted) against obstruction.

1.12 Lieferzustand

1.12.0 LACKIERUNG UND SCHUTZ

Abgesehen von anderweitig lautenden vertraglichen Vereinbarungen werden die Getriebe extern mit einer Epoxyd-Grundierung und einem blauen Synthetik-Emaillack RAL 5010 lackiert.
Dieser Schutz ist für einen Einsatz in normalen industriellen, auch im Freien liegenden Umfeldern geeignet und erlaubt Überlack- ierungen mit Synthetiklack.
Weitere Informationen zum Lieferzustand können der folgenden Tabelle entnommen werden.

Eigenschaften der Lackierung
Der verwendete Lack weist folgende Eigenschaften auf: wärmehärtender Pulverlack auf Polyesterharzbasis mit Epoxidharzen modifiziert.

Auf Anfrage erhältlich:
1-Lackierungszyklus;
2-Stärke, Härte, Korrosionsfestigkeit;
3-Technisches Datenblatt des verwendeten Pulverlacks.
Sollten besonders aggressive Umgebungs- bedingungen vorliegen, müssen Speziall- ackierungen verwendet werden **TYP0-TYP1-TYP2-TYP3-TYP4**.

ACHTUNG
Sollten die Produkte lackiert werden, muss darauf geachtet werden, dass die bearbeiteten und Dichtflächen dabei geschützt werden, so dass verhindert werden kann, dass die Lackierung die chemisch-physischen Eigenschaften verändert und die Wirkung der Ölabdichtungen einschränkt. In der gleichen Weise und aus gleichem Grund müssen das Typenschild und die Öleinfüllschraube sowie die Bohrung der Entlüftungsschraube (wo vorhanden) geschützt werden.

OPT2
Opzioni - Verniciatura
Options - Painting and surface protection
Optionen - Lackierung und Oberflächenschutz

Serie *Series* Baureihe	Grandezza *Size* Baugröße	Verniciatura Interna *Inner painting* Innenlackierung	Verniciatura Esterna *Outer painting* Außenlackierung		Piani lavorati *Machined surfaces* Bearbeitete Flächen	Alberi *Shafts* Wellen
			Tipo e Caratteristiche vernice *Paint type and features* Lacktyp und -eigenschaften	Verniciabile *Can be painted* Kann lackiert werden		
TypSTM						
R	63-70-85-110-130-150-180-215-250	Uguale a verniciatura esterna *Same as outer painting* Wie Außenlackierung	Verniciatura a Polvere RAL 5010 *Powder coating RAL 5010* Pulverlackierung RAL 5010	Sì Dopo Sgrassatura e Carteggiatura e/o applicazione di un PRIMER *Yes* *After Degreasing and sanding and/or application of a PRIMER* Ja Nach Fettentfernung und Abschliff und/oder Auftrag eines PRIMER	Quando il materiale è la ghisa sono protetti con olio antiruggine. *When material is cast iron, they are protected with rustproof oil.* Falls aus Gusseisen mit Rostschutzöl geschützt.	Protetti con olio antiruggine. *Protected with rustproof oil.* Mit Rostschutzöl geschützt
W	25-30-40-50-63-75-90-110-130-150					
CR (CRI-CRMI)	Vedere Tipo R. / *See R. type*/ Siehe R. Typ					
C (CR-CB)	70-85-110-130-150-180-215-250					
U	63-75-90-110					
WM	63-71-80-90-100-112		Verniciatura RAL 5010			
Without Paint						
R	28-40-50	Nessuna *None* Keine	Nessuna *None* Keine	Sì - Prodotti monocomponente e bicomponente *Yes -Monocomponent and bicomponent products* Ja - Ein- und Zweikomponenten-Produkte	Nessuna *None* Keine	Protetti con olio antiruggne. *Protected with rustproof oil.* Mit Rostschutzöl geschützt
CR (CRI-CRMI)	Vedere Tipo R. / *See R. type*/ Siehe G. Typ					
C (CR-CB)	40-50					
U	40-50					
Z	12-19-24-32-38-42-55-75					
ZL	331-332-333-334-432-433-434					

1.12 Stato di fornitura

1.12.1 MATERIALI COSTRUTTIVI

1.12.1.1 Casse - Flange - Coperchi

1.12 Scope of the supply

1.12.1 MATERIAL

1.12.1.1 Housings - Flanges - Covers

1.12 Lieferzustand

1.12.1 KOSTRUKTIONSMATERIAL

1.12.1.1 Gehäuse - Flanschen – Deckel

Serie *Series* Baureihe	Casse/-Housings/Gehäuse		Flange - Coperchi/Flanges - Covers/Flanschen – Deckel	
	Alluminio/*Aluminium*/Aluminium	Ghisa/*Grey*/Guss	Alluminio/*Aluminium*/Aluminium	Ghisa/*Grey*/Guss
R	28 - 40 - 50 - 63 - 70 - 85	110 - 130 - 150 - 180 - 215 - 250	28 - 40 - 50 - 63 - 70 - 85 - 110	130 - 150 - 180 - 215 - 250
W	25 - 30 - 40 - 50 - 63 - 75 - 90	110 -130-150	25 - 30 - 40 - 50 - 63 - 75 - 90	110 -130-150
CR (CRI-CRMI)	Vedere tipo R			
C (CR-CB)	40 - 50 - 70	85 - 110	40 - 50 - 70 - 85 - 110	130 - 150 - 180 - 215 - 250
U	40 - 50 - 63 - 75 - 90 - 110	-	40 - 50 - 63 - 75 - 90 - 110	-
WM	63 - 71	80 - 90 - 100 - 112	63 - 71	80 - 90 - 100 - 112
Z	-	12-19-24-32-38-42-55-75	-	12-19-24-32-38-42-55-75
ZL	331-332-333-334-432-433-434	-	331-332-333-334-432-433-434	-

1.12..2 Materiale degli anelli di tenuta

1.12.1.2 Materials of Seals

1.12.1.2 Dichtungsstoffe

Serie *Series* Baureihe	**OPT** Opzioni - Materiale degli anelli di tenuta Options - Materials of Seals Optionen - Dichtungsstoffe	
	— (Tenute STANDARD Oil Seals Standard Ölabdichtungen Standard)	.... Opzioni - Disponibile Options Available Optonen - verfügbar — A richiesta On request Auf Anfrage
R	— **(VT1 - NBR2)**	**VT2 - SL1- SL2 - SL**
CR (CRI-CRMI)	— **(VT1 - NBR2)**	**VT2 - SL1- SL2 - SL**
C (CR-CB)	— **(VT1 - NBR2)**	**VT2 - SL1- SL2 - SL**
U	— **(VT1 - NBR2)**	**VT2 - SL1- SL2 - SL**
W	— **(NBR)**	—
WM	— **(NBR)**	—
Z	— **(NBR)**	—

NBR1	Paraoli in NBR in entrata	NBR oil seals at input end	Ölabdichtungen aus NBR im Antrieb
NBR2	Paraoli in NBR in uscita	NBR oil seals at output end	Ölabdichtungen aus NBR im Abtrieb
NBR	Paraoli in NBR in entrata ed in uscita	NBR oil seals at input and output end	Ölabdichtungen aus NBR im An- und Abtrieb
VT1	Paraoli in viton in entrata	Viton oil seals at input end	Ölabdichtungen aus Viton im Antrieb
VT2	Paraoli in viton in uscita	Viton oil seals at output end	Ölabdichtungen aus Viton im Abtrieb
VT	Paraoli in viton in entrata ed in uscita	Viton oil seals at input and output end	Ölabdichtungen aus Viton im An- und Abtrieb
SL1	Paraoli in silicone in entrata	Input Silicon oil seals	Eingehender Silikon-Dichtungsring
SL2	Paraoli in silicone in uscita	Output Silicon oil seals	Ausgehender Silikon-Dichtungsring
SL	Paraoli in silicone in entrata ed in uscita	Input and outpul oil seals	Ein-und ausgehende Silikon-Dichtungsringe

1.12 Stato di fornitura

1.12 Scope of the supply

1.12 Lieferzustand

1.12.2 Lubrificazione

1.12.2 Lubrication

1.12.2 Schmierung

	OPT1 - Opzioni - Stato fornitura olio Options - Scope of the supply - Options - OIL Optionen - Lieferzustand - Optionen - Öl	
	Lub	Sigla ordine Designation order Bezeichnung Bestellung
RI RMI	28	INOIL_STD
	40	
	50	
	63	
	70	
	85	
	110	OUTOIL
	130	
	150	
	180	
	215	
	250	

	OPT1 - Opzioni - Stato fornitura olio Options - Scope of the supply - Options - OIL Optionen - Lieferzustand - Optionen - Öl	
	Lub	Sigla ordine Designation order Bezeichnung Bestellung
CR CB	40	INOIL_STD
	50	
	70	
	85	OUTOIL
	110	
	130	
	150	
	180	
	215	
	250	

	OPT1 - Opzioni - Stato fornitura olio Options - Scope of the supply - Options - OIL Optionen - Lieferzustand - Optionen - Öl	
	Lub	Sigla ordine Designation order Bezeichnung Bestellung
UI UMI	40	INOIL_STD
	50	
	63	
	75	
	60	
	110	

	OPT1 - Opzioni - Stato fornitura olio Options - Scope of the supply - Options - OIL Optionen - Lieferzustand - Optionen - Öl	
	Lub	Sigla ordine Designation order Bezeichnung Bestellung
WI WMI	25	INOIL_STD
	30	
	40	
	50	
	63	
	75	
	90	
	110	OUTOIL
	130	
	150	

	OPT1 - Opzioni - Stato fornitura olio Options - Scope of the supply - Options - OIL Optionen - Lieferzustand - Optionen - Öl	
	Lub	Sigla ordine Designation order Bezeichnung Bestellung
CRI CRMI	28/28	INOIL_STD
	28/40	
	28/50	
	28/63	
	28/70	
	40/40	
	40/50	
	40/63	
	40/70	
	40/85	
	50/70	
	50/85	
	50/110	
	63/70	
	63/85	
	63/110	
	63/130	
	70/85	
	70/110	
	70/130	
	85/110	OUTOIL
	85/130	
	85/150	
	85/180	
	110/150	
	110/180	
	110/215	
	130/180	
	130/250	

	OPT1 - Opzioni - Stato fornitura olio Options - Scope of the supply - Options - OIL Optionen - Lieferzustand - Optionen - Öl	
	Lub	Sigla ordine Designation order Bezeichnung Bestellung
ZL	331	INOIL_STD
	332	
	333	
	334	
	432	
	433	
	434	

	OPT1 - Opzioni - Stato fornitura olio Options - Scope of the supply - Options - OIL Optionen - Lieferzustand - Optionen - Öl	
	Lub	Sigla ordine Designation order Bezeichnung Bestellung
Z	12	OUTOIL
	19	
	24	
	32	
	38	
	42	
	55	
	75	

	OPT1 - Opzioni - Stato fornitura olio Options - Scope of the supply - Options - OIL Optionen - Lieferzustand - Optionen - Öl	
		Sigla ordine Designation order Bezeichnung Bestellung
WM	63	INOIL_STD
	71	
	80	
	90	
	100	
	112	

1.12 Stato di fornitura

1.12.2 Lubrificazione

ATTENZIONE:
Lo stato di fornitura è messo in evidenza con una targhetta adesiva posta sul riduttore.
Verificare la corrispondenza tra stato di fornitura e targhetta adesiva.

1.12 Scope of the supply

1.12.2 Lubrication

CAUTION:
Gearbox state of supply is indicated on a nameplate applied on gearbox.
Ensure that nameplate data and state of supply correspond.

1.12 Lieferzustand

1.12.2 Schmierung

ACHTUNG:
Der entsprechende Lieferzustand wird auf einem Aufkleber am Getriebe angegeben.
Überprüfen Sie die Übereinstimmung zwischen effektivem Lieferzustand und Aufkleber.

OPT1 - Opzioni - Stato fornitura olio-
Options - Scope of the supply - Options - OIL
Optionen - Lieferzustand - Optionen - Öl

Stato fornitura Scope of the supply Lieferzustand	Riduttore - Lubrificazione Gearbox - Lubrification Getriebe - Schmierung	Tipo Type Typ	NOTE Note Hinweis	Targhetta Namplate Aufkleber
OUTOIL Riduttore Privo di Lubrificante *Gearbox with no lubricant* Getriebe ohne Schmiermittel	Si consiglia l'uso di oli a base sintetica. Vedere a tale proposito le indicazioni riportate paragrafo1.2 e 1.6. Tutti i riduttori con limitatore di coppia LC-LP-LF devono essere lubrificati ad olio: **la lubrificazione a grasso non è ammessa.** The use of synthetic oil is recommended. see details in paragraph 1.2 and 1.6. All gearboxes incorporating torque limiters LC-LP-LF will have to be lubricated with oil: **grease lubrication is not admitted**. Der Einsatz von synthetischem Öl wird empfohlen. Siehe diesbezüglich die Hinweise im Abschnitt 1.2 und 1.6. Alle Getriebe mit Rutschkupplung LC-LP-LF müssen mit Öl geschmiert werden: **Eine Fettschmierung ist hier nicht zulässig**.		Se richiesti completi di lubrificante, verranno forniti con olio standard - "**INOIL_STD**" If customer requests supply of gearbox with lubricant, we shall supply - "**INOIL_STD**" Falls diese Getriebe mit Schmiermittelfüllung angefordert werden - "**INOIL_STD**"	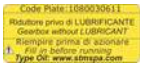
INOIL_STD Riduttore Completo di Lubrificante Standard STM *Gearbox with lubricant STM standard* Getriebe mit Standard Schmiermittel STM	RI-CRI-CR-UI-WI-Z **OMALA S4 WE 320**	OilGear_TYPE CLP PG Synthetic **PG**	WI - Nothing namplate	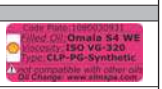
	WM **SPIRAX S2 ATF AX**	ATF_Oil Mineral	WM - Look at 1.12.3	
	ZL331 **FG B 00b tamlith**	Grease	—	Nothing
	ZL332-333-334-432-433-434 **OMALA S2 G 100**	OilGear_TYPE CLP Mineral	—	Nothing
INOIL_Food Riduttore Completo di Lubrificante "ALIMENTARE" *Gearbox with lubricant "FOOD-TYPE"* Getriebe mit Schmiermittel "LEBENSMITTEL"	RI-CRI-CR-UI-WI-Z **CASSIDA GL 320**	OilGear_TYPE CLP HCE Synthetic **HCE** **NSF H1**	—	
ASOIL Riduttore Completo di Lubrificante Speciale - a richiesta Gearbox with Special lubricant - On request Getriebe mit Sondern-Schmiermittel - Auf Anfrage	A richiesta On request Auf Anfrage	OilGear_TYPE CLP PG Synthetic **PG**	—	
		OilGear_TYPE CLP HC Synthetic **PAO**		
		OilGear_TYPE CLP Mineral		
		OilGear_TYPE CLP HCE Synthetic **HCE** **NSF H1**		
		Grease		

Nota campo- ASOIL
Nella targhetta sono riportate le seguenti informazioni:
- Code_Plate;
- Sigla lubrificante;
- ISO VG;
- Type DIN;
- NSF;
- Altre prescrizioni.

Note range-ASOIL
The type plate contains the following information:
- Code_Plate
- Lubricant type
- ISO VG
- Type DIN
- NSF
- other details

Hinweis Bereich-ASOIL
Auf dem Typenschild finden Sie folgende Informationen:
- Code_Plate
- Schmiermitteltyp
- ISO VG
- Type DIN
- NSF
- andere Hinweise

1.12 Stato di fornitura

1.12.2 Lubrificazione

Riduttori forniti con il cuscinetto schermato

Se ne consiglia il ringrasaggio indipendentemente dalle ore di esercizio effettuate, dopo almeno 2-3 anni.

Pertanto è stato predisposto un ingrassatore per provvedere all'opportuno ringrassaggio.

Le Caratteristiche tecniche generali del grasso utilizzato sono:

- Inspessente: base di Litio;
- NGLI: 2;
- Olio: minerale con adittivazione EP di viscosità minima ISO VG 160;
- Adittivi: l'olio presente nel grasso deve avere caratteristiche di adittivazione EP;

SPECIFICHE E APPROVAZIONI

ISO:**L-X-BCHB 2**
DIN 51 825: **KP2K -20**

1.12 Scope of the supply

1.12.2 Lubrication

Worm gearboxes with a shielded bearing

It is recommended to grease it at least every 2-3 years regardless of the operating hours.

To this end it is provided with a greaser.

Following are the general technical features of the lubrication grease:

- Thickener: Lithium-based;
- NGLI: 2;
- Oil: mineral with EP additives with minimum viscosity as per ISO VG 160;
- Additives: the oil in the grease must feature EP additive;

SPECIFICATIONS AND APPROVALS

ISO:**L-X-BCHB 2**
DIN 51 825: **KP2K -20**

1.12 Lieferzustand

1.12.2 Schmierung

Getrieben mit abgeschirmtem Lager geliefert werden

Wir empfehlen, unabhängig von den erfolgten Betriebsstunden, mindests alle 2-3 Jahre ein entsprechendes Nachschmieren.

Daher wurde ein angemessener Schmiernippel für das Nachschmieren vorgesehen.

Allgemeine technische Eigenschaften des verwendeten Fetts:

- Verdickungsmittel: auf Lithiumbasis;
- NGLI: 2;
- Öl: Mineralöl mit Zusatz von EP mit Mindestviskosität gemäß ISO VG 160;
- Additive: das im Fett enthaltene Öl muss die Eigenschaften der EP Additivierung aufweisen;

SPEZIFIKATIONEN
ISO:**L-X-BCHB 2**
DIN 51 825: **KP2K -20**

1.12.3 VARIATORE MECCANICO

1.12.3 MECHANICAL VARIATOR

1.12.3 MECHANISCHES VERSTELLGETRIEBE

TARGHETTA ALLEGATA AL VARIATORE MECCANICO
NAMEPLATE ON MECHANICAL VARIATOR
DEM MECHANISCHEN VERSTELLGETRIEBE BEIGEFÜGTES TYPENSCHILD

WM

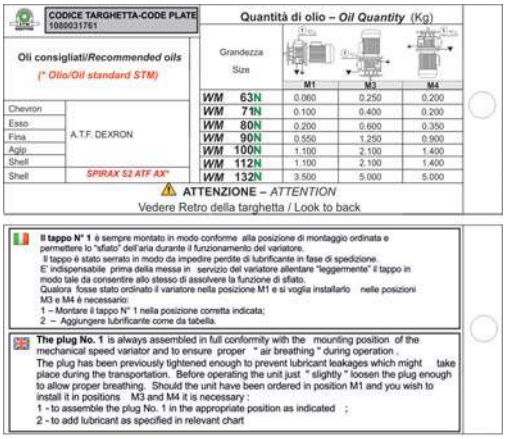

CODICE TARGHETTA-CODE PLATE 10000031761

Oli consigliati/*Recommended oils*
(* Olio/Oil standard STM)

Chevron	A.T.F. DEXRON
Esso	
Fina	
Agip	
Shell	
Shell	*SPIRAX S2 ATF AX**

Quantità di olio – *Oil Quantity* (Kg)

Grandezza / Size	M1	M3	M4
WM 63N	0.060	0.250	0.200
WM 71N	0.100	0.400	0.200
WM 80N	0.200	0.600	0.350
WM 90N	0.550	1.250	0.900
WM 100N	1.100	2.100	1.400
WM 112N	1.100	2.100	1.400
WM 132N	3.500	5.000	5.000

ATTENZIONE – *ATTENTION*
Vedere Retro della targhetta / Look to back

Il tappo N° 1 è sempre montato in modo conforme alla posizione di montaggio ordinata e permettere lo "sfiato" dell'aria durante il funzionamento del variatore.
Il tappo è stato serrato in modo da impedire perdite di lubrificante in fase di spedizione.
E' indispensabile prima della messa in servizio del variatore allentare "leggermente" il tappo in modo tale da consentire allo stesso di assolvere la funzione di sfiato.
Qualora fosse stato ordinato il variatore nella posizione M1 e si voglia installarlo nelle posizioni M3 e M4 è necessario:
1 – Montare il tappo N° 1 nella posizione corretta indicata;
2 – Aggiungere lubrificante come da tabella.

The plug No. 1 is always assembled in full conformity with the mounting position of the mechanical speed variator and to ensure proper " air breathing " during operation .
The plug has been previously tightened enough to prevent lubricant leakages which might take place during the transportation. Before operating the unit just " slightly " loosen the plug enough to allow proper breathing. Should the unit have been ordered in position M1 and you wish to install it in positions M3 and M4 it is necessary :
1 - to assemble the plug No. 1 in the appropriate position as indicated ;
2 - to add lubricant as specified in relevant chart

1.12 Stato di fornitura

1.12.4 Connessione motore/riduttore con giunto STM/ROTEX

Qualora la connessione tra riduttore e macchina motrice sia effettuata con un giunto è necessario verificare se è necessario montare un linguetta di dimensioni a disegno STM.
La linguetta e la targhetta nella quale sono riportate le istruzioni di montaggio sono allegate ad ogni fornitura.
Qualora non fornite segnalare il problema al Nostro Ufficio Commerciale ed attenersi alla presenti istruzioni per l'istallazione del motore sul riduttore.
Di seguito sono allegate targhette con le relative istruzioni di montaggio.

1.12 Scope of the supply

1.12.4 Connecting the motor and gearbox with STM/ROTEX joint

If gearbox and driving machine are connected by means of a joint, check whether it is necessary to install a key sized as specified on STM drawing.
Key and nameplate indicating assembly instructions come with any supply.
Should they be missing, report this problem to our Sales Dept. and follow these instructions for installing the motor to gearbox.

Follow are showed some of the nameplates bearing the installation instructions

1.12 Lieferzustand

1.12. Verbindung zwischen motor und getriebe über kupplung STM/ROTEX

Bei Verbindung zwischen Getriebe und Antriebseinheit über eine Kupplung muss überprüft werden, ob ein Federkeil gemäß STM-Maßzeichnung erforderlich ist.
Der Federkeil und das Schild, auf dem die Montageanleitung wiedergegeben wird, sind im Lieferumfang enthalten.
Sollten sie nicht mitgeliefert worden sein, muss dies unserer Verkaufsabteilung mitgeteilt werden. Für die Installation des Motors am Getriebe muss man sich an die entsprechenden Anleitungen halten
.Auf den folgenden Seiten werden die Blätter mit den entsprechenden Montageanleitungen angefügt.

Giunto a disegno "STM"
Joint to "STM" drawing
Kupplung gemäss "STM"-zeichnung

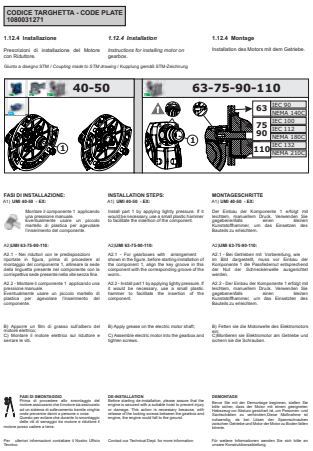

Connessione motore/riduttore
Connecting the motor/gearbox
Verbindung zwischen motor und Getriebe
RMI 110 - PAM 132

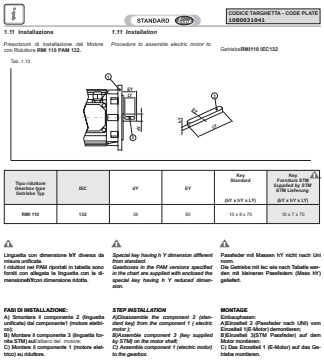

Per quanto non quì specificato, fare riferimento al manuale d'uso e manutenzione reperibile sul ns. sito Web: www.stmspa.com

For additional information please refer to STM maintenance booklet available on our internet site: www.stmspa.com

Fuer weitere Auskünfte bitte STM Wartungshandbuch nachsehen. Es ist in internet : www.stmspa.com

1.12.4 Installazione

Prescrizioni di installazione del Motore con Riduttore.

1.12.4 Installation

Instructions for installing motor on gearbox.

1.12.4 Montage

Installation des Motors mit dem Getriebe.

Giunto a disegno STM / *Coupling made to STM drawing* / Kupplung gemäß STM-Zeichnung

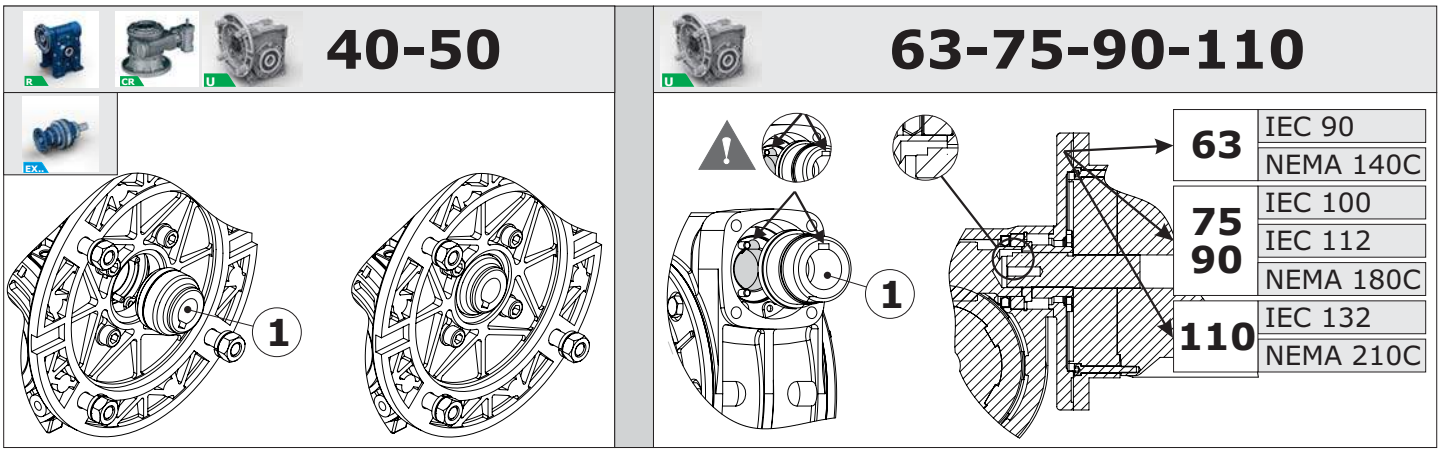

FASI DI INSTALLAZIONE:

A1) **UMI 40-50 - EX:**

Montare il componente 1 applicando una pressione manuale.
Eventualmente usare un piccolo martello di plastica per agevolare l'inserimento del componente.

A2) **UMI 63-75-90-110:**

A2.1 - Nei riduttori con le predisposizioni riportate in figura, prima di procedere al montaggio del componente 1, allineare la sede della linguetta presente nel componente con la corrispettiva sede presente nella vite senza fine.

A2.2 - Montare il componente 1 applicando una pressione manuale.
Eventualmente usare un piccolo martello di plastica per agevolare l'inserimento del componente.

B) Apporre un film di grasso sull'albero del motore elettrico;
C) Montare il motore elettrico sul riduttore e serrare le viti.

INSTALLATION STEPS:

A1) **UMI 40-50 - EX:**

Install part 1 by applying lightly pressure. If it would be necessary, use a small plastic hammer to facilitate the insertion of the component.

A2) **UMI 63-75-90-110:**

A2.1 - For gearboxes with arrangement shown in the figure, before starting installation of the component 1, align the key groove in this component with the corresponding groove of the worm..

A2.2 - Install part 1 by applying lightly pressure. If it would be necessary, use a small plastic hammer to facilitate the insertion of the component.

B) Apply grease on the electric motor shaft;

C) Assemble electric motor into the gearbox and tighten screws.

MONTAGESCHRITTE

A1) **UMI 40-50 - EX:**

Der Einbau der Komponente 1 erfolgt mit leichtem, manuellem Druck. Verwenden Sie gegebenenfalls einen kleinen Kunststoffhammer, um das Einsetzen des Bauteils zu erleichtern.

A2) **UMI 63-75-90-110:**

A2.1 - Bei Getrieben mit Vorbereitung, wie im Bild dargestellt, muss vor Einbau der Komponente 1 die Passfedernut entsprechend der Nut der Schneckenwelle ausgerichtet werden.

A2.2 - Der Einbau der Komponente 1 erfolgt mit leichtem, manuellem Druck. Verwenden Sie gegebenenfalls einen kleinen Kunststoffhammer, um das Einsetzten des Bauteils zu erleichtern.

B) Fetten sie die Motorwelle des Elektromotors ein;
C)Montieren sie Elektromotor am Getriebe und sichern sie die Schrauben.

FASI DI SMONTAGGIO
Prima di procedere allo smontaggio del motore assicurarsi che il motore sia assicurato ad un sistema di sollevamento tramite cinghia onde prevenire danni a persone o cose.
Questo per evitare che durante lo smontaggio delle viti di serraggio tra motore e riduttore il motore posso cadere a terra.

Per ulteriori informazioni contattare il Nostro Ufficio Tecnico.

DE-INSTALLATION
Before starting de-installation, please assure that the engine is secured with a suitable hoist to prevent injury or damage. This action is necessary because, with release of the locking screws between the gearbox and engine, the engine could fall to the ground.

Contact our Technical Dept. for more information

DEMONTAGE
Bevor Sie mit der Demontage beginnen, stellen Sie bitte sicher, dass der Motor mit einem geeigneten Hebezeug vor Absturz gesichert ist, um Personen- und Sachschäden zu verhindern.Diese Maßnahme ist notwendig, da bei Lösen der Spannschrauben zwischen Getriebe und Motor der Motor zu Boden fallen könnte.

Für weitere Informationen wenden Sie sich bitte an unsere Konstruktionsabteilung.

1.12.4 Installazione

Prescrizioni di installazione del Motore con Riduttore **RMI 110 PAM 132.**

1.12.4 Installation

*Procedure to assemble electric motor to Gearbox **RMI110 PAM132***

1.12.4 Montage

Vorschriften für Einbau des Motors an Getriebe **RMI110 IEC132**

Tab. 1.13

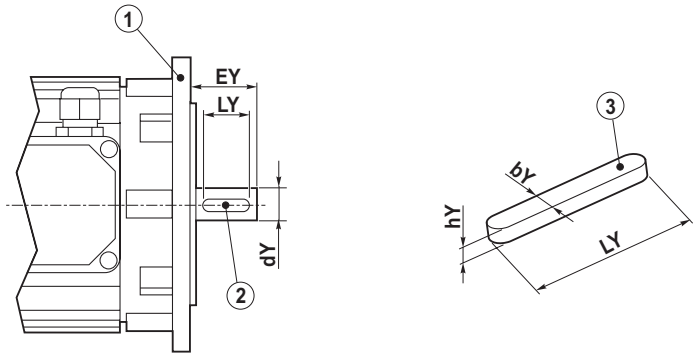

Tipo riduttore *Gearbox type* Getriebe Typ	IEC	dY	EY	Key Standard (bY x hY x LY)	Key Fornitura STM *Supplied by STM* STM Lieferung (bY x hY x LY)
RMI 110	**132**	38	80	10 x 8 x 70	10 x 7 x 70

Linguetta con dimensione **hY** diversa da misura unificata.
I riduttori nei PAM riportati in tabella sono forniti con allegata la linguetta con la dimensione **hY** con dimensione ridotta.

Special key having h Y dimension different from standard.
Gearboxes in the PAM versions specified in the chart are supplied with enclosed the special key having h Y reduced dimension.

Passfeder mit Massen hY nicht nach Uni norm.
Die Getriebe mit Iec wie nach Tabelle werden mit kleineren Passfedern (Mass hY) geliefert.

FASI DI INSTALLAZIONE:
A) Smontare il componente 2 (linguetta unificata) dal componente1 (motore elettrico);
B) Montare il componente 3 (linguetta fornita STM) sull'albero del motore;
C) Montare il componente 1 (motore elettrico) su riduttore.

STEP INSTALLATION
A)Disassemble the component 2 (standard key) from the component 1 (electric motor);
B)Assemble component 3 (key supplied by STM) on the motor shaft;
C) Assemble component 1 (electric motor) to the gearbox.

MONTAGE
Einbauphasen:
A)Einzelteil 2 (Passfeder nach UNI) vom Einzelteil 1(E-Motor) demontieren;
B)Einzelteil 3(STM Passfeder) auf dem Motor montieren;
C) Das Einzelteil 1 (E-Motor) auf das Getriebe montieren.

1.13 Normative applicate

1.13.1 Specifiche prodotti non “ATEX”

I riduttori della STM SpA sono organi meccanici destinati all’uso industriale e all’incorporazione in apparecchiature meccaniche più complesse. Dunque non vanno considerati macchine indipendente per una predeterminata applicazione ai sensi 2006/42/CE, né tantomeno dispositivi di sicurezza.

1.13 Standards applied

1.13.1 Specifications of non - "ATEX" products

STM SpA gearboxes are mechanical devices for industrial use and incorporation in more complex machines. Consequently, they should not be considered neither self-standing machines for a pre-determined application according to 2006/42/CE *nor safety devices.*

1.13 Angewendete Normen

1.13.1 Spezifikationen für produkte, die nicht der "ATEX"-norm entsprechen

Bei den Getrieben der STM SpA handelt es sich um Mechanikorgane, die für den industriellen Einsatz und einen Einbau in komplexere Einrichtungen bestimmt sind. Sie werden deshalb weder unter dem Aspekt unabhängiger, für eine bestimmte Anwendung vorgesehener Maschinen im Sinne der 2006/42/CE, noch als Sicherheitsvorrichtungen berück- sichtigt.

1.13 Normative applicate

1.13.2 Specifiche prodotti “ATEX”

Campo applicabilità
La direttiva ATEX (2014/34/UE) si applica a prodotti elettrici e non elettrici destinati a essere introdotti e svolgere la loro funzione in atmosfera potenzialmente esplosiva. Le atmosfere potenzialmente esplosive vengono suddivise in gruppi e zone a seconda della probabilità di formazione. I prodotti STM sono Conformi alla seguente classificazione:

1- Gruppo: **II**
2- Categoria: **Gas 2G** polveri **2D**
3- Zona: Gas **1 ; 2** – Polveri **21 ; 22**

1.13 Standards applied

1.13.2 Specifications of "ATEX" products

Application field
ATEX set of provisions (2014/34/UE) is referred to electric and non-electric products which are used and run in a potentially explosive environment. The potentially explosive environments are divided into different groups and zones according to the probability of their formation. STM products are in conformity with following classification:

*1- Group : **II***
*2- Type : **Gas 2G** dust **2D***
*3-Zone : Gas **1 ; 2** – Dust **21** ; 22*

1.13 Angewendete Normen

1.13.2 Spezifikationen für "ATEX"-produkte

Anwendungsbereich
Die ATEX-Richtlinie (2014/34/UE) wird bei elektrischen und nicht elektrischen Produkten angewendet, die dazu bestimmt sind, in potentiell explosionsfähigen Atmosphären eingesetzt und betrieben zu werden. Die potentiell explosionsfähigen Atmosphären werden in Abhängigkeit der Wahrscheinlichkeit in Gruppen und Zonen unterteilt. Die STM-Produkte entsprechen der folgenden Klassifizierung:
1- Gruppe: **II**
2- Kategorie: **Gas 2G** Staub **2D**
3- Zone: Gas **1 ; 2** - Staub **21 ; 22**

Massime temperature di superficiali / *Max surface temperature allowed* / Maximale Oberflächentemperaturen					
Classe di temperatura / *Temperature class* / Temperaturklasse	**T1**	**T2**	**T3**	**T4**	**T5**[(1)]
Massima temp.di superficie / *Max surface temperature /* Max. Oberflächentemperaturen (°C)	450	300	200	135	100[(1)]
Classi di temperatura ATEX dei prodotti STM / *ATEX temperature class of STM products* / ATEX Temperaturklassen der STM-Produkte					
[(1)] Classe di temperatura ATEX ottenibile a richiesta / *ATEX temperature class on request* / Auf Anfrage erhältliche ATEX-Temperaturklasse					

I prodotti STM sono marcati classe di temperatura **T4** per IIG (atmosfera gassosa) e **135° C** per IID (atmosfera polverosa).

Nel caso di classe di temperatura T5 occorre verificare la potenza limite termico declassata (rif. normativa interna NORM_0198, visionabile sul sito web: *www.stmspa.com*).

I prodotti del gruppo IID (atmosfera polverosa) vengono definiti dalla massima temperatura di superficie effettiva.

La massima temperatura di superficie è determinata in normali condizioni di installazione e ambientali (–20°C e +40°C) e senza depositi di polvere sugli apparecchi. Qualunque scostamento da queste condizioni di riferimento può influenzare notevolmente lo smaltimento del calore e quindi la temperatura.

*STM products are branded temperature class **T4** for IIG (gas environment) and **135°C** for IID (dust environment).*

In case of T5 temperature class it will be necessary to verify the declassed thermal limit power (refer to internal standard NORM_0198, available on the web site: www.stmspa.com).

The products of the family IID (dust environment) are defined by the max effective surface temperature.

Max surface temperature is determined in standard installation and environmental conditions (-20°C and +40°C) and in absence of dust on product surface.
Any other condition will modify the heat dissipation and consequently the temperature.

Die STM-Produkte sind mit der Temperaturklasse **T4** für IIG (Atmosphäre mit gasförmiger Belastung) und 135° C für IID (Atmosphäre mit staubförmiger Belastung) gekennzeichnet.
Bei der Temperaturklasse T5 muss die deklassierte thermische Grenzleistung überprüft werden (Bezug auf firmeninterne NORM_0198, abrufbar aus der Website: www.stmspa.com.

Die der Gruppe IID (Atmosphäre mit staubförmiger Belastung) angehörigen Produkte werden ihrer effektiven maximalen Oberflächentemperatur gemäß definiert.
Die maximale Oberflächentemperatur wird in normalen Einbau- und Umgebungsbedingungen (-20°C und +40°C) und ohne auf den Vorrichtungen vorhandenen Staubablagerungen bestimmt.
Jegliche Abweichung von diesen Bezugsbedingungen kann sich erheblich auf die Wärmeableitung bzw. auf die Betriebstemperatur auswirken.

1.13.3 Prodotti disponibili

I prodotti disponibili in esecuzione “ATEX” sono:
- Vite senza fine (RI,RMI);
- Vite senza fine con precoppia (CR,CB);

N.B
Sono escluse dalla cerificazione tutte le versioni con limitatore di coppia e con motore compatto.

1.13.3 Products available

Products available in ‘’ ATEX ‘’ execution:

- Worm screw (RI,RMI);
- Worm screw with snug torque (CR,CB);

N.B.
All versions with torque limiter and compact motor are excluded from certification.

1.13.3 Verfügbare Produkte

In der "ATEX"-Version verfügbare Produkte:

- Schneckengetriebe (RI, RMI);
- Schneckengetriebe mit Vorstufe (CR,CB);

HINWEIS
Ausgenommen von dieser Zertifizierung sind alle Versionen mit Rutschkupplung und Kompaktmoto-

1.13 Normative applicate

1.13.4. COME SI APPLICA

Al momento di una richiesta di offerta per prodotto conforme a normativa ATEX 2014/34/UE occorre compilare la ***scheda acquisizione dati*** (www.stmspa.com).
Effettuare le verifiche come prima descritto.
I riduttori certificati verranno consegnati con:
-una seconda targhetta contenente i dati ATEX;
-ove previsto un tappo sfiato, tappo sfiato con molla interna;
-se rispondente alla classe di temperatura T4 e T5 verrà allegato un indicatore di temperatura (132 °C nel caso di T4 e 99°C rispettivamente per la T5)
-Indicatore di temperatura : termometro a singolo rilevamento, una volta raggiunta la temperatura indicata si annerisce segnalando il raggiungimento di tale limite.

1.13 Standards applied

1.13.4. HOW IS IT APPLIED

In case of request of offer relating to any product in conformity with the provisions ATEX/2014/34/UE, the ***specifications paper*** *should be filled in* (www.stmspa.com).
Perform the inspections as described above. Certified reducers will be delivered with:
- a second nameplate containing ATEX data;
- a breather valve with internal spring, where a breather is needed;
- if in accordance with classes of temperature T4 and T5, a temperature gauge will be included (132 °C in case of T4 and 99 °C in case of T5).
- Temperature gauge: single-reading thermometer, it blackens once temperature is reached, pointing out the achievement of that limit.

1.13 Angewendete Normen

1.13.4. ANWENDUNGSWEISE

Bei einer Angebotsanfrage für der Richtlinie ATEX 2014/34/UE entsprechende Produkte muss das Datenerfassungsformular (www.stmspa.com) ausgefüllt werden.
Dazu die zuvor beschriebenen Kontrollen vornehmen.
Die zertifizierten Getriebe werden wie folgt ausgestattet geliefert: -mit einem zweiten Typenschild mit ATEX-Daten;
-wo vorgesehen, mit einem Entlüftungs- verschluss, Entlüftungsverschluss mit interner Feder;
-falls der Temperaturklasse T4 und T5 entsprechend, wird eine Temperaturanzeige vorgesehen (132 °C bei T4 und 99°C bei T5)
-Temperaturanzeige: einzelnes Erfassungs-thermometer - bei Erreichen der angegebenen Temperatur wechselt die Farbe zur Anzeige der erreichten Temperatur in Schwarz.

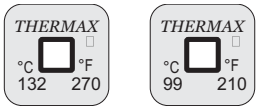

1.13.5 UE Direttive - marcatura CE- ISO9001

Direttiva Bassa Tensione 2014/35/UE
I motoriduttori, motorinvii angolari, motovariatori e i motori elettrici STM sono conformi alle prescrizioni della direttiva Bassa Tensione .

2014/30/UE Compatibilità elettromagnetica
I motoriduttori, motoriviiangolari, motovariatori e i motori elettrici STM sono conformi alle specifiche della direttiva di Compatibilità Elettromagnetica.

Direttiva Macchine 2006/42/CE
I motoriduttori, motoriviiangolari, motovariatori e i motori elettrici STM non sono macchine ma organi da installare o assemblare nelle macchine.

Marchio CE, dichiarazione del fabbricante e dichiarazione di conformità.

I motoriduttori, motovariatori e i motori elet- trici hanno il marchio CE.
Questo marchio indica la loro conformità alla direttiva Bassa Tensione e alla direttiva Compatibilità Elettromagnetica.
Su richiesta, STM può fornire la dichiarazione di conformità dei prodotti e la dichiarazione del fabbricante secondo la direttiva macchine.

ISO 9001
I prodotti STM sono realizzati all'interno di un sistema di qualità conforme allo standard ISO 9001. A tal fine su richiesta è possibile rilasciare copia del certificato.

1.13.5 UE Directives-CE mark-ISO 9001

Directive 2014/35/UE Low VoltageSTM
geared motors, right angle drives with motor, motovariators and electric motors meet the specification of the low voltage directive.

2014/30/UE Electromagnetic Compatibility
STM geared motors, right angle drives with motor, motovariators and electric motors correspond to the specifications of the EMC directive.

Machinery Directive 2006/42/CE
STM geared motors, right angle drives with motor, motovariators and electric motors are not standalone machines, they are exclusively for installation into a machine or for assembly on a machine.

CE Mark, Conformity Declarations and Manufacturer's Declaration.
STM geared motors, right angle drives with motor, motovariators and electric motors carry the CE Mark.
It indicates conformity to the low voltage directive and to electromagnetic compatibility directive.
On request STM supplies both the conformity declarations and the manufacturer's declaration according to the machine directive.

ISO 9001
STM products have been designed and manufactured according to ISO 9001 quality system standard.
On request a copy of the certification can be issued.

1.13.5 UE-Richtlinien - CE-Zeichen - ISO9001

Niederspannungsrichtlinie. 2014/35/UE
Die Getriebemotoren, Winkelgetriebe, Verstellgetriebe und Elektromotoren der STM entsprechen den Vorschriften der Niederspannungsrichtlinie.

2014/30/UE Elektromagnetische Verträglichkeit
Die Getriebemotoren, Winkelgetriebe, Verstellgetriebe und Elektromotoren der STM entsprechen den Vorschriften der Richtlinie zur Elektromagnetischen Verträglichkeit.

Maschinenrichtlinie 2006/42/CE
Die Getriebemotoren, Winkelgetriebe, Verstellgetriebe und Elektromotoren der STM sind keine Maschinen sondern Organe, die in Maschinen eingebaut oder an diesen montiert werden.

CE-Zeichen, Hersteller- und Konformitätserklärung
Die Getriebemotoren, Verstellgetriebe und Elektromotoren tragen das CE-Zeichen.

Dieses Zeichen weist auf ihre Konformität mit der Niederspannungsrichtlinie und der Richtlinie zur Elektromagnetischen Verträglichkeit hin.
Auf Anfrage kann die STM die Konformitätserklärung und die Hersteller- erklärung gemäß Maschinenrichtlinie zu den Produkten liefern.

ISO 9001
Die STM-Produkte werden in einem Qualitätssystem gemäß dem Standard ISO 9001 realisiert. Auf Anfrage kann daher eine Kopie der Zertifizierung geliefert werden.

1.13 Normative applicate

1.13.6 Normative riferimento Progettazione e Fabbricazione

Tutti i prodotti della STM sono progettati nel rispetto delle seguenti normative:

Calcolo degli ingranaggi e cuscinetti

ISO 6336
Calcolo della capacità di carico degli ingranaggi cilindrici.

BS 721
Calcolo della capacità di carico delle viti e delle corone elicoidali.

ISO 281
Calcolo della durata a fatica dei cuscinetti volventi.

Alberi
DIN 743
Calcolo della durata a fatica degli alberi

Materiali

EN 10084
Acciaio da cementazione per ingranaggi e viti senza fine.

EN 10083
Acciaio da bonifica per alberi.

UNI EN 1982
Bronzo per corone elicoidali.

UNI EN 1706
Alluminio e leghe di Alluminio

UNI EN 1561
Fusioni in ghisa grigia.

UNI EN 1563 2004
Getti di ghisa a grafite sferoidale

UNI 3097
Acciaio per cuscinetti per piste rotolamento.

1.13 Standards applied

1.13.6 Standards applied

All STM products are designed following these standards:

Calculation of gearboxes and bearings

ISO 6336:
Calculation of load capacity of spur and helical gears

BS 721:
Calculation of load capacity for worm gearing.

ISO 281:
Rolling bearings — Dynamic load ratings and rating life

Shafts
DIN743
Shafts — Dynamic load ratings and rating life

Materials

EN 10084
Case hardening steels for gears and worms

EN 10083
Quenched and Tempered Steels for shafts

UNI EN 1982
Copper for helical worm-gears

UNI EN 1706
Aluminium alloy

UNI EN 1561
Grey iron casting

UNI EN 1563 2004
Spheroidal cast iron

UNI 3097
Ball and roller bearing steel

1.13 Angewendete Normen

1.13.6 Bezugsnormen Entwicklung und Produktion

Alle Produkte der STM werden unter Einhaltung folgender Normen entwickelt:

Berechnung der Zahnräder und Lager

ISO 6336
Berechnung der Belastungsfähigkeit der zylindrischen Zahnräder.

BS 721
Berechnung der Belastungsfähigkeit der Schnecken und Schrägzahnräder.

ISO 281
Berechnung der Belastungsdauer der Wälzlager.

Wellen
DIN743
Berechnung der Belastungsdauer der Wellen.

Material

EN 10084
Einsatzstahl für Zahnräder und Schnecken.

EN 10083
Vergütungsstahl für Wellen.

UNI EN 1982
Bronze für Schrägzahnräder

UNI EN 1706
Aluminium und Aluminiumlegierungen

UNI EN 1561
Grauguss-Legierungen

UNI EN 1563 2004
Sphäroguss

UNI 3097
Stahl für Lagergleitbahnen

1.0 RIDUTTORI A VITE SENZA FINE R - CR - C
1.0 WORM GEARBOXES R - CR - C
1.0 SCHNECKENGETRIEBE R - CR - C

R-CR-C

1.1	Caratteristiche tecniche	*Technical characteristics*	Technische Eigenschaften	B1
1.2	Designazione	*Designation*	Bezeichnungen	B4
1.2	Versioni	*Versions*	Ausführungen	B5
1.4	Lubrificazione	*Lubrication*	Schmierung	B16
1.5	Carichi radiali e assiali	*Axial and overhung loads*	Radiale und Axiale Belastungen	B24
1.6	Prestazioni riduttori	*Gearboxes performances*	Leistungen der Getriebe	B27
1.7	Prestazioni motoriduttori	*Gearmotors performances*	Leistungen der Getriebemotoren	B42
1.8	Dimensioni	*Dimensions*	Abmessungen	B80
1.9	Accessori	*Accessories*	Zubehör	B98

B

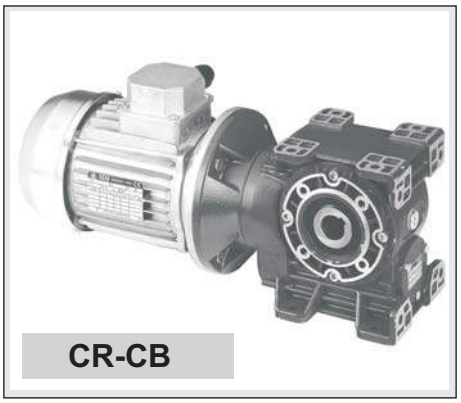

1.1 Caratteristiche tecniche

RI-RMI - Il rinnovamento del prodotto principale dell'azienda, prevede sostanzialmente tre innovazioni: due tecnologiche e una commerciale
E' stata utilizzata la pressofusione per tutti i particolari in alluminio (dalla grandezza 28 alla 85) per migliorare la resistenza flessotorsionale viene da anni adottato il profilo ZI per la dentatura (sezione ad evolvente) per migliorare il rendimento e la silenziosità ed infine è stata introdotta la flangiatura modulare in uscita (FL) per aumentarne la flessibilità.

Nuove idee per crescere insieme: per primi dal 1987 con il brevetto del limitatore di coppia integrato all'interno del riduttore standard.

CRI-CRMI - Semplicemente unendo due unità a vite senza fine, otteniamo questa serie di riduttori per applicazioni con rapporti molto lenti: basso rendimento ma alta competitività e silenziosità Ovviamente sono disponibili tutti gli accessori della serie R , quali le viti bisporgenti in entrata, i conici sulla corona uscita, il limitatore di coppia, albero lento e il braccio di reazione.

CR-CB - Nella realizzazione di questi riduttori, ha dominato la scelta tecnica di realizzare un unico carter che contenesse tutti gli ingranaggi
Questa soluzione consente un efficiente smaltimento del calore unitamente ed una elevata rigidità e semplicità di applicazione
Gli effetti più positivi si riflettono sul rendimento, sulla durata e sulla coppia trasmissibile che la logica del compromesso costo/ prestazioni ne esalta la convenienza tra i rapporti intermedi.

1.1 Technical characteristics

RI-RMI - The company has decided to update main product by adding three innovative principles : two technical and one commercial.
All components in aluminium are die casted (from size 28 to size 85) to increase resistance to torsional and structure flexibility.
ZI teething profile (section and involute) has been adopted to increase efficiency and silentness.
Finally, a modular attachable output flange (FL) has been adopted to increase flexibility.

New ideas to approach a bigger market together: first since 1987 the patent of the torque limiter built inside our standard gearbox.

CRI-CRMI - Simply to connect two worm gear, we obtain this gearboxes series for applications with low ratios: less efficiency but high competitivity and silentness.
All accessories of the series R are available, such as double extension input, output taper bearing, torque limiter, output solid shaft and torque arm.

CR-CB - When designing this range of gearbox, STM technicians decided to project one single body to include all gears.
This solution allows an efficient heat dissipation as well as a high housing rigidity and application easiness.
Efficiency will then be positively improved but also longevity and highest transmittable torque.
The compromise cost/performances is particularly centered in the middle range reduction ratios.

1.1 Technische Eigenschaften

RI-RMI - Die Erneuerung des Kernprodukt des Unternehmens bietet drei wesentliche Innovationen: zwei technische und eine wirtschaftliche.
Es wurde für alle Aluminium-Teile (ab Größe 28 bis 85) das Druckgießverfahren angewendet, um den Biege-Widerstand zu verbessern. Für die Evolventenverzahnung wurde das Profil ZI verwendet, um die Leistung und Geräuschlosigkeit zu verbessern, und letztendlich wurde der modulare Ausgangsflansch (FL) eingeführt, um die Flexibilität zu erhöhen.

Neue Ideen für gemeinsames Wachstum: Seit 1987 nennen wir den Einbau des Drehmomentbegrenzers im Inneren unserer Standardgetriebe unser Patent.

CRI-CRMI - Durch die einfache Kombination von zwei Schneckeneinheiten erhalten wir diese Getriebereihe für sehr langsame Anwendungsverhältnisse: niedrige Leistung, aber hohe Wettbewerbsfähigkeit.

Selbstverständlich stehen alle Zubehörteile der Baureihen R zur Verfügung.

CR-CB - Bei der Herstellung dieser Getriebe lag der technische Schwerpunkt auf der Konstruktion eines einzigen Gehäuses, das alle Zahnräder beinhaltet.
Diese Lösung ermöglicht eine effiziente Wärmeableitung sowie eine hohe Steifigkeit und eine einfache Handhabung.
Die positiven Auswirkungen spiegeln sich bei der Leistungsfähigkeit, der Dauer und der Drehmomentübertragung wider. Der notwendige Kompromiss zwischen Preis / Leistung erweist sich als äußerst vorteilhaft für mittlere Übersetzungsverhältnisse.

1.1 Caratteristiche tecniche

Carattestiche giunto STM

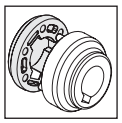

- Ingombri ***Ridotti***;
- Semplicità di connessione;
- ***NO*** Fretting;
- ***NO*** Vibrazioni;
- Progettato per garantire efficienza e affidabilità con servizi gravosi in presenza di urti e con numerosi avviamenti.

1.1 Technical characteristics

STM Special features - Coupling

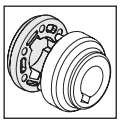

*-**Reduced** Sizes*
-Simplified connections
*-**No** fretting*
*-**No** vibrations*
-Designed in order to warrant efficiency and reliability with heavy duty in case of bumps and frequent start-upsSimplified connections

1.1 Technische Eigenschaften

Die STM Sondernmerkmale - Kupplung:

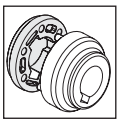

-Verringerter Platzbedarf;
-Einfacher Anschluss;
-Keine Abnutzung;
-Keine Vibrationen;
-Gewährleistet Effizienz und Zuverlässigkeit bei hoher Belastung, Stossbeeinträchtigung und zahlreichen Maschinen-Starts.

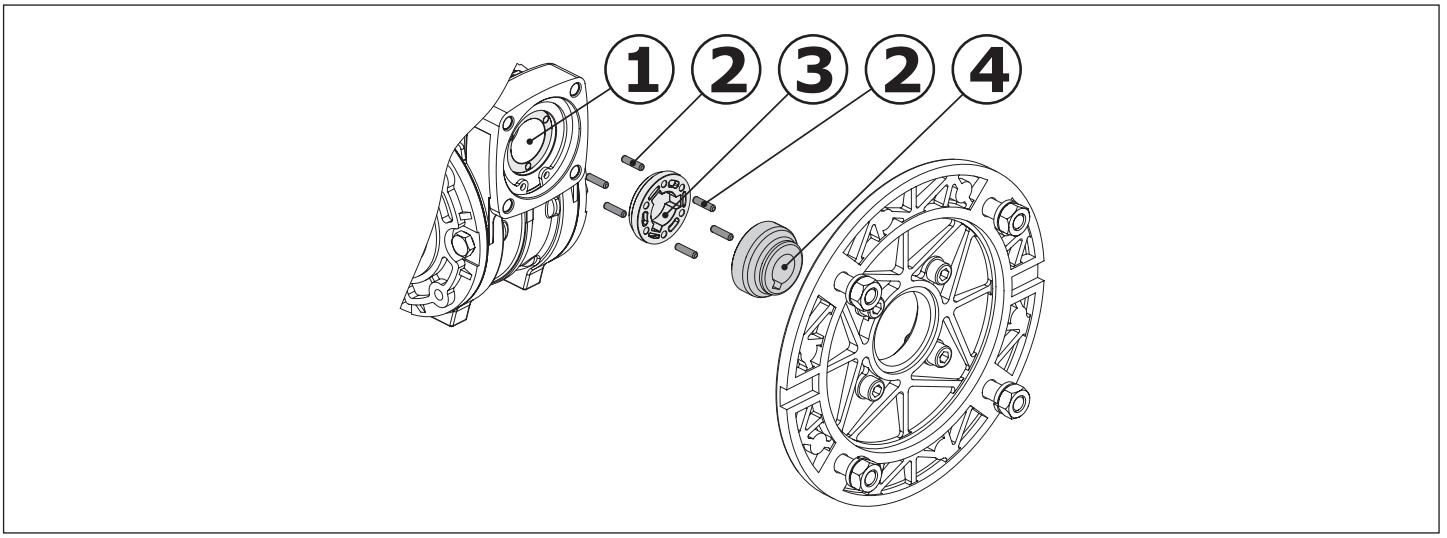

MATERIALE:
1 - Vite senza fine
Acciaio Cementazione;
2 - Pioli - - Acciaio per cuscinetti
3 - Giunto - Tecnopolimero PA 46
4 -Semigiunto - Acciaio da bonifica.

MANUTENZIONE:
-Facilità di Montaggio motore;
-Facilità di Smontaggio

MODULARITA':
-Possibilità di utilizzare il giunto sulle serie "**RMI**" - "**CRMI".**

TEMPI DI CONSEGNA:
-Maggiore modularità del prodotto;
-Stock a magazzino del prodottoassemblato.

MATERIAL:
1 - Worm gear – cementation steel
2 – Pin – bearing steel
3 - Coupling – techno polymer PA 46
4 – Coupling half - tempered steel

MAINTEINANCE:
-Easy motor assembly;
-Easy disassembly.

MODULARITY:
*Possibility of coupling's using specially those of **"RMI**" - "**CRMI" series.***

DELIVERY DATES
-Higher product's modularity
-Stock warehouse finished product.

MATERIAL:
1 – Schneckenwelle - Einsatzstahl
2 – Stifte – Lagerstahl
3 – Kupplung – Technopolymer PA 46
4 – Kupplungshälfte – Stahl wärmebehandelt

WARTUNG:
-Einfacher Motoreinbau;
-Einfacher Ausbau.

MODULARITÄT
Die Kupplung kann in den Serien „**RMI**" - „**CRMI...G**" verwendet werden.

LIEFERZEITEN:
-Größere Modularität des Produktes;
-Montiertes Produkt imLaberbestand

1.1 Caratteristiche tecniche

Limitatore di coppia STM

ATTENZIONE !
Il limitatore di coppia non può essere considerato in alcun caso un dispositivo per la sicurezza dell'operatore ma solo un sistema di protezione della macchina.

Il limitatore di coppia STM è utile in tutti i casi nei quali si voglia proteggere una trasmissione da sovraccarichi, urti e qualunque irregolarità della coppia assorbita dall'utilizzatore.

La scelta ottimale dei materiali della corona (bronzo GCuSn12 UNI 7013) e dell'albero e della bussola (acciaio temprato e rettificato) consente di garantire delle durate molto elevate anche in presenza di frequenti slittamenti.
Nei confronti delle frizioni tradizionali pre- senta numerosi vantaggi:

- è incorporato, senza variazioni dimen- sionali, nei riduttori a vite senza fine semplici RI/RMI, combinati CRI/CRMI e con precoppia CR/CB nella gamma delle grandezze 28,40,50,63,70,85, 110,130,150.
- è protetto da qualunque contaminante (acqua, polvere, olio, grasso),ecc.
- è concepito per lavorare a bagno d'olio, cosa che lo rende affidabile nel tempo ed esente da usura.
- è facilmente regolabile dall'esterno tra mite il serraggio di un dado esagonale.
- può slittare anche per diversi minuti senza danneggiarsi.

Il limitatore di coppia è montato nel riduttore utilizzando cuscinetti radiali **ed esclu- dendo l'applicazione di cuscinetti conici** in quanto i carichi assiali generati da questi ultimi provocherebbero alterazioni nella taratura del limitatore stesso.
Nel par. 1.6 sono riportati i valori della coppia di slittamento del limitatore in funzione del numero di giri del dado di regolazione o della ghiera.
Ricordiamo inoltre che su specifica richie- sta, nei riduttori combinati, è possibile montare il limitatore di coppia sul primo riduttore (più piccolo) con la possibilità di mantenere l'irreversibilità del gruppo, qualora la scelta dei rapporti la preveda, e con un costo più contenuto del dispositivo.

Configurazioni:

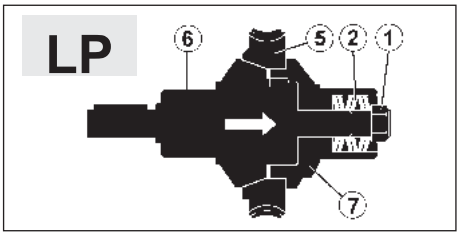

Facendo riferimento alle figure, la trasmis- sione del moto avviene per attrito fra le su- perfici dell'albero (6) della corona dentata (5) e della bussola (7) che vengono sotto- poste ad una determinata compressione (regolabile) per mezzo dell'azione eserci- tata sulle molle a tazza (2) dal dado di rego- lazione o dalla ghiera (1).

1.1 Technical characteristics

STM torque limiter

ATTENTION !
The torque limiter can not be considered as a security device for the operator but as a protection system for the machine.

STM torque limiter is useful in all those cases where it is necessary to protect a transmission from overloads, shocks and any other torque irregularities.

The perfect choice of the wormheel mate- rial (bronze GCuSn12 UNI 7013) together with the shaft and bushings which are made out of ground and hardened steel, enable the manufacturer to guarantee long life even with frequent slippings.
Several are the advantages that it offers when compared with traditional clutches:

- *it is built-in in the wormgearboxes type RI-RMI, in the combined units type CRI/CRMI and with primary reduction type CR/CB in sizes 28,40,50, 63,70,85,110,130,150 without any design modifications.*
- *it is protected from any possible polluting agents (water, dust, oil, grease) etc.*
- *it has been designed for oil-bath operation therefore reliable and wearfree.*
- *it is easily adjustable from outside by turning a standard hexagonal nut.*
- *it can slip for several minutes at a time without damage.*

*The torque limiter is assembled on to the gearbox by means of radial bearings **and not taper roller bearings** since the axial loads created by them could alter the calibration of the torque limiter itself.*
On chapter 1.6 are listed the values of the slipping torque of the torque limiter in operation and of the nut's number of turns.
It is important to draw the attention on the fact that, upon request, it is possible to assemble the torque limiter on to the first gearbox (the smaller one) in the combined units and this will not affect the irreversibility of the unit depending on the ratios of the gearboxes. As a result the unit will certainly be less expensive.

Versions:

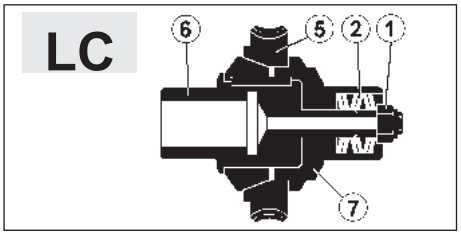

With reference to pictures shown below, transmission of movement takes place by means of friction between the shaft, the wormwheel and the bushing.They are infact subject of a determined compression (which can be adjusted) created by the effect of the nut on the washers.

1.1 Technische Eigenschaften

Die STM Rutschkupplung

ACHTUNG !
Bei der Rutschkupplung handelt es sich nicht um eine Sicherheits- vorrichtung für das Bedienpersonal, sondern um ein Schutzsystem für die Anlage.

Ist ein Schutz vor Überlastungen, stoßartigen Belastungen etc. erforderlich, so ist die integrierte Rutschkupplung von STM eine unentbehrliche Zusatzausstattung.

Eine optimale Werkstoffkombination - beim Schneckenrad Bronze GCuSn 12 Uni 7013 und bei der Welle gehärteter und geschliffener Stahl - garantieren auch bei häufigem Schlupf eine hohe Lebensdauer
Sie bietet immer dann Vorteile, wenn die normale Belastung eines Antriebes über- schritten wird.

- Integriert in die Standardschneckenge- triebe RI/RMI, Doppelschneckengetriebe CRI/CRMI und Stirnradschneckengetrie- be CR/CB; alle Ausführungen in den Größen 28, 40, 50, 63, 70, 85, 110, 130 und 150.
- durch die integrierte Bauweise geschützt gegen äußere Einflüsse wie Staub, Wasser, Öl, Fett, etc.
- im Ölbad laufend, dadurch zuverlässig und wartungsfrei.
- einfache Drehmomenteinstellung durch eine von außen zugängliche Einstellmutter.
- Schlupf über einen längeren Zeitraum hinweg fügt der Kupplung keinen Schaden zu, allerdings ist die erhöhte Erwärmung bei Dauerschlupf zu beachten.

Schneckengetriebe mit Rutschkupplung können nur mit Radiallagern ausgestattet werden. Zur Einstellung des Schlupf- momentes ist eine Axialverschiebung des Druckringes erforderlich, was den Einsatz von Kegelrollenlagern verhindert.
Das gewünschte Schlupfmoment kann mit Hilfe der Einstellmutter auf Basis der Werte kapitel 1.6 eingestellt werden.
Bei Doppelschneckengetrieben ist es auf Wunsch möglich, die Rutschkupplung in die erste Stufe zu integrieren. Dadurch wird die mögliche Selbsthemmung des Getriebes erhalten und die Rutschkupplung kann kleiner dimensioniert werden.
Dies ist jedoch nur bei geeigneten Untersetzungsverhältnissen möglich.

Ausgangswellenausführungen:

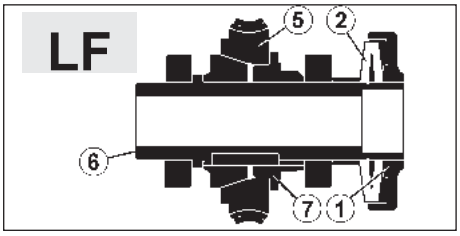

Die Drehmomentübertragung findet durch Reibschluß zwischen dem Konus der Abtriebswelle und dem Schneckenrad statt.
Die (einstellbare) Reibkraft wird durch die auf den Druckring wirkende Kraft der Tellerfedern erzeugt.

B

1.2 Designazione — *1.2 Designation* — 1.2 Bezeichnung

WEB: Reference Designation

Maschine	Typ Connection	Size	Output Version	Mounting Version	Output Flange	Reduction ratio	IEC type and Input Shaft	Input Version	Input Shaft	Designazione Motori *Designation Motors* Bezeichnung Motoren	Double Extended Input Shaft	Tapered Output Bearings	Limiter Output Version	Limiter Output Motion	Limiter HEAVY Calibration	Limiter Scope of Supply	Type Shaft Diameter	Shaft Diameter	Mounting Position Output Flange	Mounting positions	Position Terminal Box
00 M	01 Tyc on	02 SIZE	03 OV	03a MV	03b OF	04 IR	05 IECT	06 IV	07 IS		08 BE	09 TOB E	10 LOV	11 LOM	12 LHC	13 LSO S	14 TYP SD	15 SD	16 MPO F	17 MP	19 PMT

CODE: Example of order: "RMI 40 S 1/7 71B5 LCB TM"

R	MI I	28 40 50 63 70 85 110 130 150 180 215 250	S I D P FL F1 F2 F3 F4 PP F.F.	—	—	Vedi tabelle prestazioni *See performance tables* *Siehe Leistungs-tabellen*	— G	— N	80B5 ... 80B14 — / — Look *CT 18* / —	—	— B	— C	— LC LP LF	— A B	— TM	— 100 ...	— US	— ø...	— SIN	M1 M2 M3 M4 M5 M6	1 2 3 4 5 6 7 8

CODE: Example of order: "CRMI 40/85 S1 1/140 63B5 LCB"

CR	MI I	28/28 ... 130/250	S I D A	1 ... 8 1 ... 16	— P FL F1 F2 F3 F4 PP F.F	Vedi tabelle prestazioni *See performance tables* *Siehe Leistungs-tabellen*	— G	— N	80B5 ... 80B14 — / — Look *CT 18* / —	—	— B ..B B..B	— C	— LC LP LF	— A B	— TM	— 100 ...	— US	— ø...	—	M1 M2 M3 M4 M5 M6	1 2 3 4 5 6 7 8

WEB: Reference Designation

Maschine	Typ Connection	Output Version	Mounting Version	Output Flange	Size	Reduction ratio	IEC type and Input Shaft	Input Version	Input Shaft	Designazione Motori *Designation Motors* Bezeichnung Motoren	Double Extended Input Shaft	Tapered Output Bearings	Limiter Output Version	Limiter Output Motion	Limiter HEAVY Calibration	Limiter Scope of Supply	Type Shaft Diameter	Shaft Diameter	Mounting Position Output Flange	Mounting positions	Position Terminal Box
00 M	01 Tyc on	03 OV	03a MV	03b OF	02 SIZE	04 IR	05 IECT	06 IV	07 IS		08 BE	09 TOB E	10 LOV	11 LOM	12 LHC	13 LSO S	14 TYP SD	15 SD	16 MPO F	17 MP	19 PMT

CODE: Example of order: "CB /F1 40 1/44.7 56B5 LCB"

C	B R	/ Foot — Flange	—	— P FL F1 F2 F3 F4 PP F.F	40 50 70 85 110 130 150 180 215 250	Vedi tabelle prestazioni *See performance tables* *Siehe Leistungs-tabellen*	—	— N	80B5 ... 80B14 — / — Look *CT 18* / —	—	— B	— C	— LC LP LF	— A B	— TM	— 100 ...	— US	— ø...	— SIN	M1 M2 M3 M4 M5 M6	1 2 3 4 5 6 7 8

00 M - Macchina — *M - Maschine* — **M - Getriebe**

	R		CR		C

1.2 Designazione — *1.2 Designation* — 1.2 Bezeichnung

01 TYPCON - Tipo connessione — *TYPCON - Type Connection* — TYPCON - Typ Verbindung

RI	RMI	CRI	CRMI	CR	CB	CR	CB

02 SIZE - Grandezza — *SIZE - Size* — SIZE - Größe

RI RMI	28	40	50	63	70	85	110	130	150	180	215	250
CRI CRMI	28/28	28/40 40/40	28/50 40/50	28/63 40/63	28/70 40/70 50/70 63/70	40/85 50/85 63/85 70/85	50/110 63/110 70/110 85/110	63/130 70/130 85/130	85/150 110/150	85/180 110/180 130/180	110/215	130/250
CR CB	—	40	50	—	70	85	110	130	150	180	215	250

03 03a 03b — **RI RMI**

OV - Versione Uscita	*OV - Output Version*	OV - Abtriebausführung
MV - Versione Montaggio	*MV - Mounting Version*	MV - Bauversion
OF - Flangia Uscita	*OF - Output Flange*	OF - Flansche am Abtrieb

S

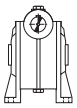

Foot - "upper worm"

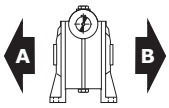

Foot - "upper worm"

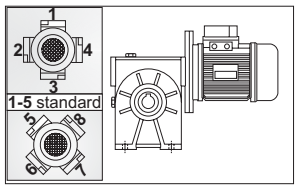

I

Foot - "lower worm"

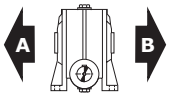

Foot - "lower worm"

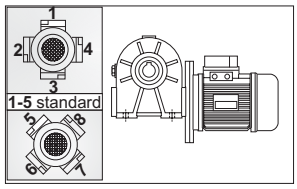

D

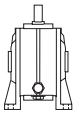

Foot - "lateral worm"

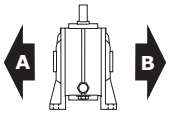

Foot - "lateral worm"

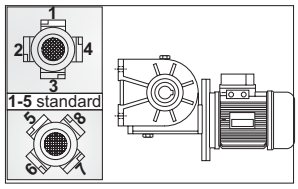

FL **F.**

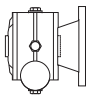

Flange mounted

Left - side Standard
Flange mounted

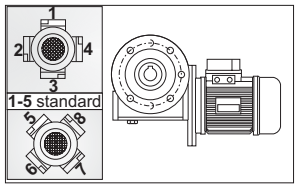

P

Flange mounted

Left - side Standard
Flange mounted

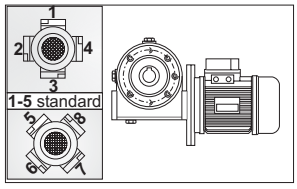

PP **F.F.**

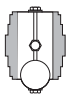

Flange mounted - "Two"

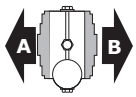

Flange mounted - "Two"

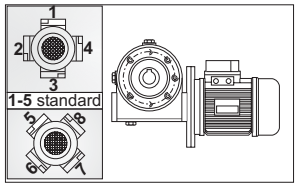

Elenco versioni
Versions
Ausführungen

Il senso dell'elica è destro
The helix is right-hande
Die Schnecke ist rechtsgängig

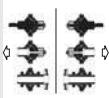

Lato uscita moto limitatore
Limiter Output Motion
Rutschkupplung-Abtriebsseite

Posizioni della Morsettiera
Position Terminal Box
Montagposition
Klemmenkasten

1.2 Designazione

1.2 Designation

1.2 Bezeichnung

03 03a 03b	CRI CRMI	OV - Versione Uscita	*OV - Output Version*	OV - Abtriebausführung
		MV - Versione Montaggio	*MV - Mounting Version*	MV - Bauversion
		OF - Flangia Uscita	*OF - Output Flange*	OF - Flansche am Abtrieb

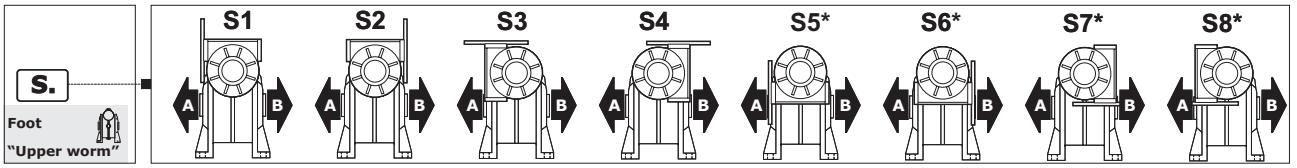

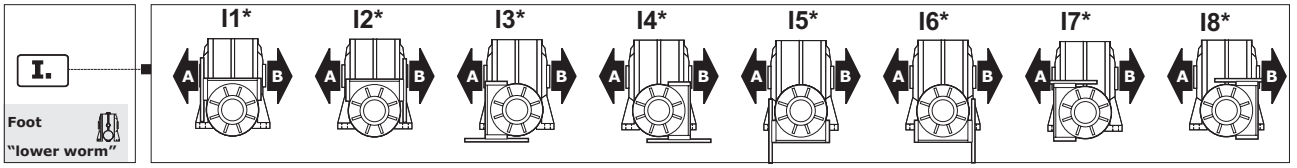

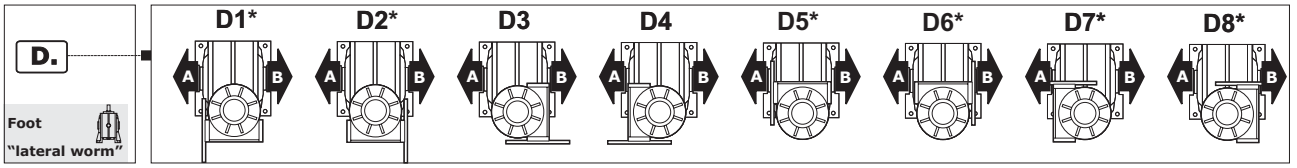

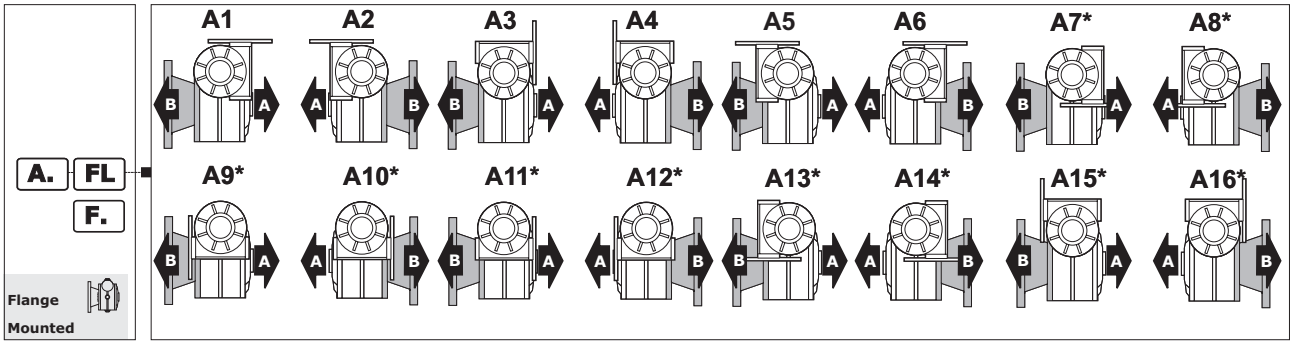

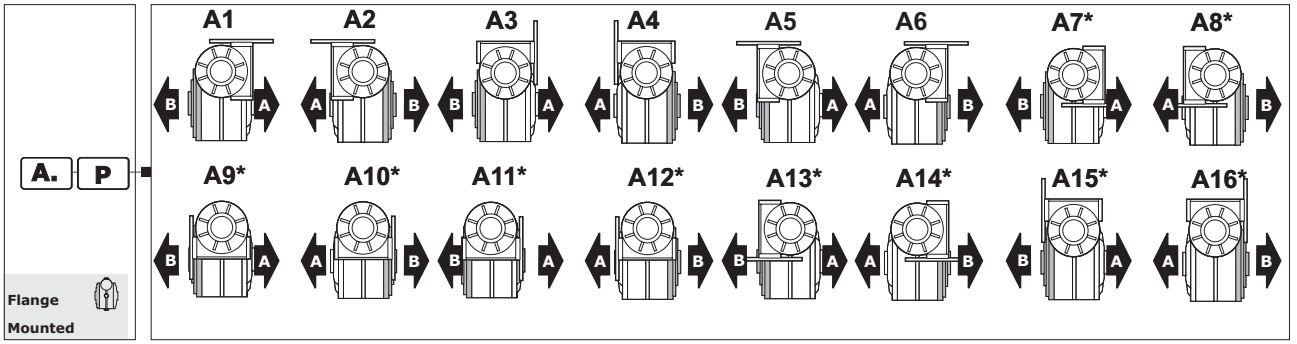

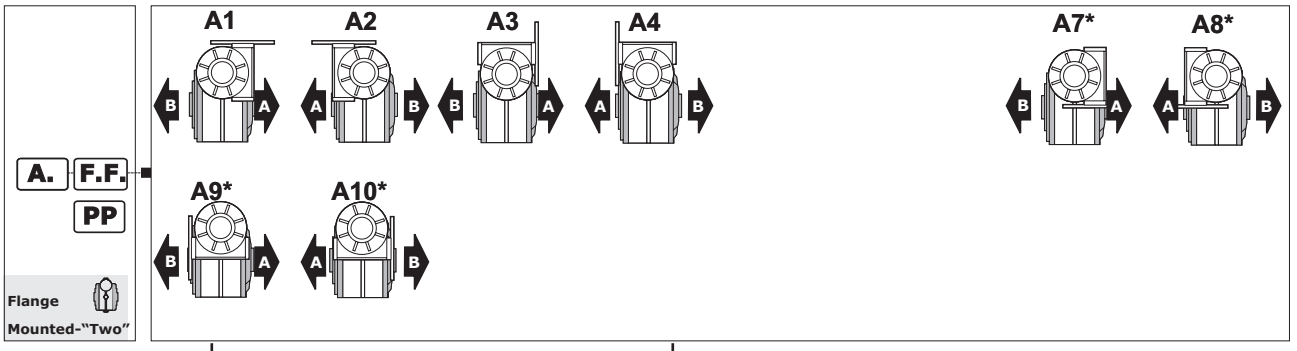

Elenco versioni
Versions
Ausführungen

Lato uscita moto limitatore
Limiter Output Motion
Rutschkupplung-Abtriebsseite

(*) Per le versioni contrassegnate chiedere l'applicabilità delle flange B5 e B14 al ns. Servizio tecnico.
(*) When selecting gearboxes please ask our technicians availability of B5 and B14 flanges on the version marked.
(*) Während der Auswahl des Getriebe mit Motorflansch aufgebaut bitte unsere Techniker die Möglichkeit B5/B14 Flansch auf der benötigte Ausführung befragen.

1.2 Designazione / *1.2 Designation* / 1.2 Bezeichnung

03 03a 03b	CRI CRMI	OV - Versione Uscita	*OV - Output Version*	OV - Abtriebausführung
		MV - Versione Montaggio	*MV - Mounting Version*	MV - Bauversion
		OF - Flangia Uscita	*OF - Output Flange*	OF - Flansche am Abtrieb

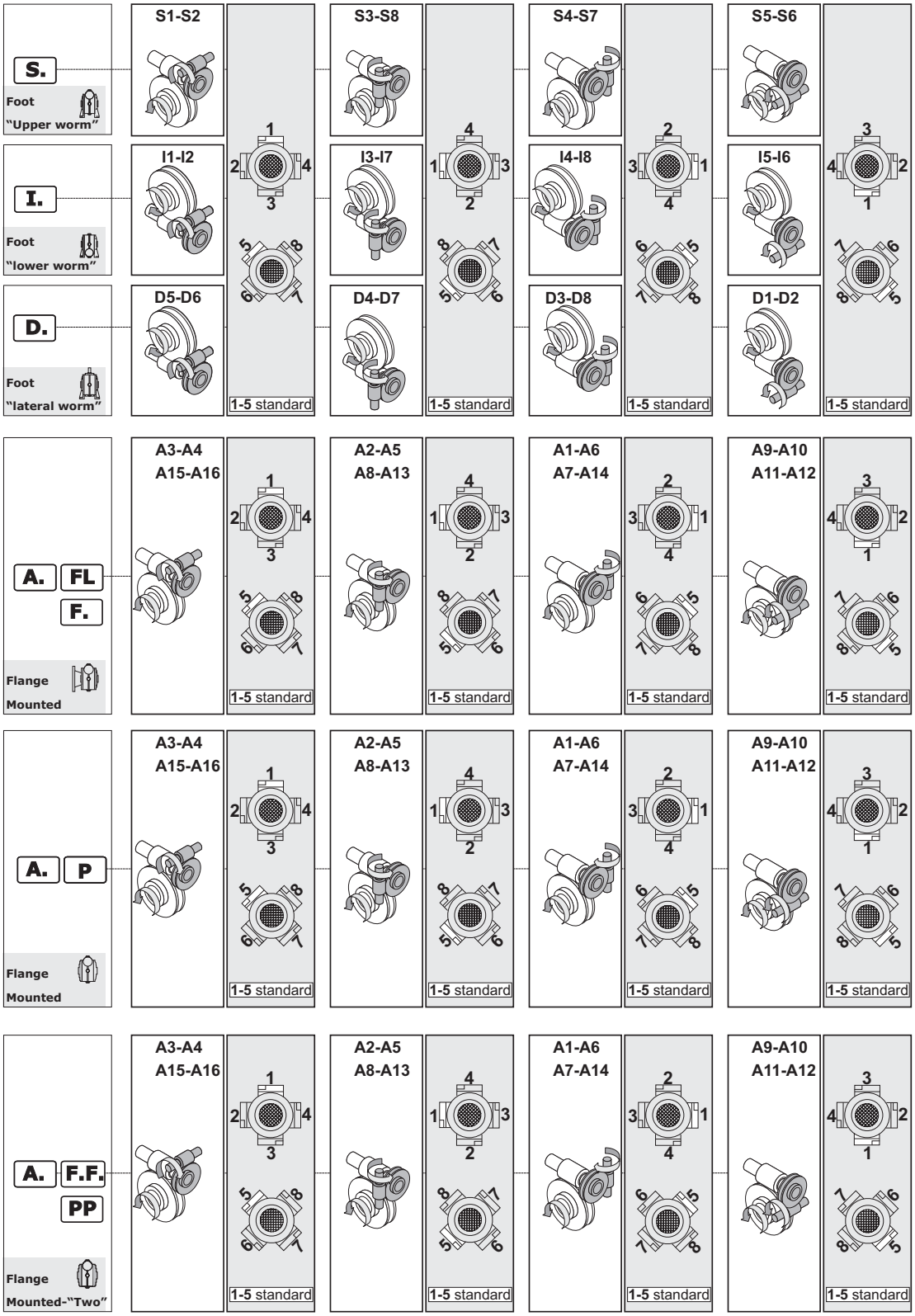

Il senso dell'elica è destro
The helix is right-hande
Die Schnecke ist rechtsgängig

Posizioni della Morsettiera
Position Terminal Box
Montagposition
Klemmenkasten

1.2 Designazione | *1.2 Designation* | 1.2 Bezeichnung

03 03a 03b	CB CR	OV - Versione Uscita MV - Versione Montaggio OF - Flangia Uscita	*OV - Output Version* *MV - Mounting Version* *OF - Output Flange*	OV - Abtriebausführung MV - Bauversion OF - Flansche am Abtrieb

40 - 50 - 70 - 85 - 110

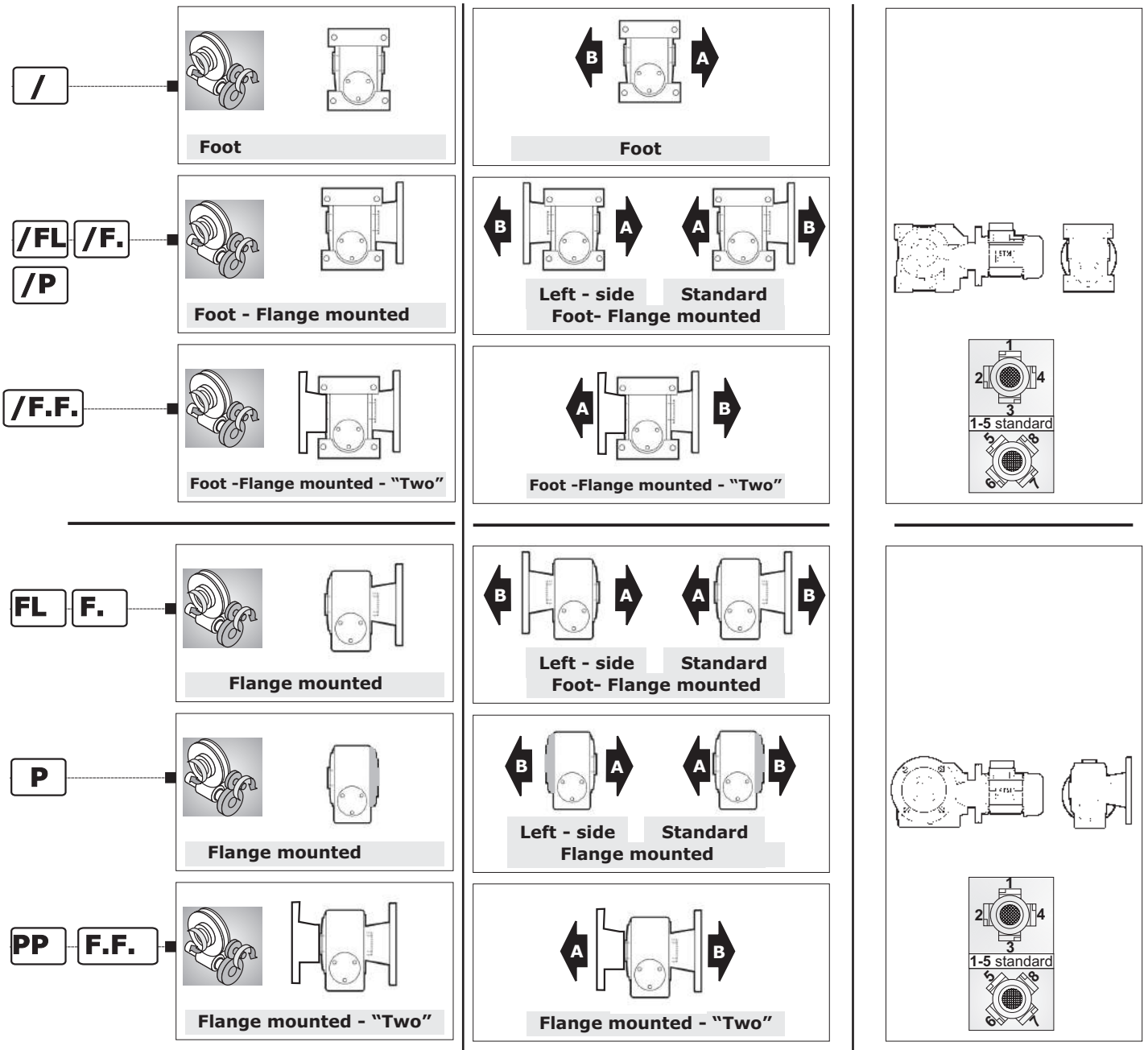

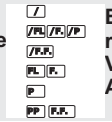

Elenco
rsioni
Versions
Ausführunge

Il senso dell'elica è destro
The helix is right-hande
Die Schnecke ist rechtsgängig

Lato uscita moto limitatore
Limiter Output Motion
Rutschkupplung-Abtriebsseite

Posizioni della Morsettiera
Position Terminal Box
Montagposition
Klemmenkasten

1.2 Designazione

1.2 Designation

1.2 Bezeichnung

03 03a 03b	CB CR	OV - Versione Uscita	*OV - Output Version*	OV - Abtriebausführung
		MV - Versione Montaggio	*MV - Mounting Version*	MV - Bauversion
		OF - Flangia Uscita	*OF - Output Flange*	OF - Flansche am Abtrieb

130 - 150 - 180 - 215 - 250

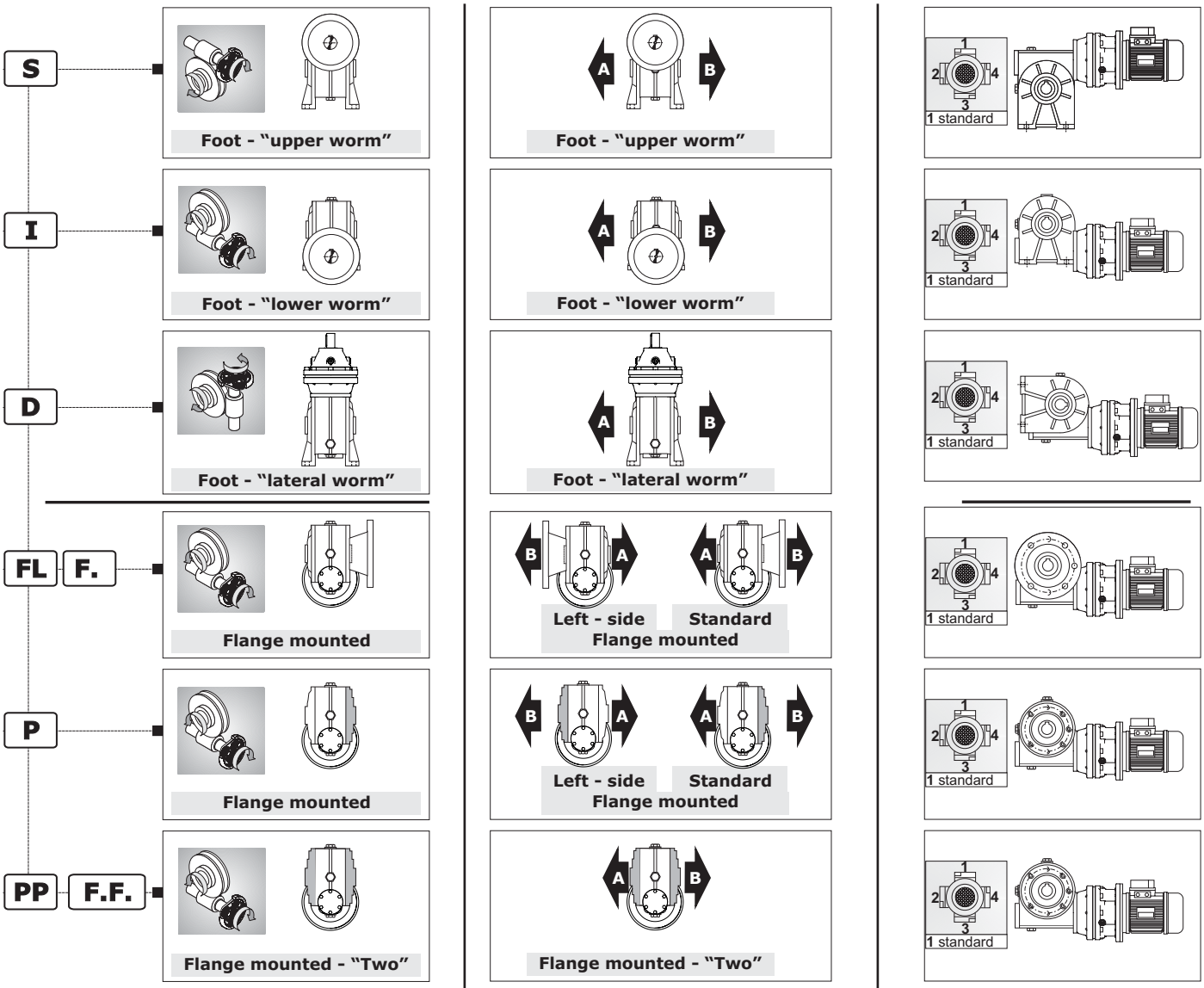

S I D FL F. P PP F.F. — Elenco versioni / Versions / Ausführungen

Il senso dell'elica è destro
The helix is right-hande
Die Schnecke ist rechtsgängig

Lato uscita moto limitatore
Limiter Output Motion
Rutschkupplung-Abtriebsseite

Posizioni della Morsettiera
Position Terminal Box
Montagposition
Klemmenkasten

04 IR- Rapporto di riduzione

(Vedi prestazioni). Tutti i valori dei rapporti sono approssimati. Per applicazioni dove necessita il valore esatto consultare il ns. servizio tecnico.

IR - Reduction ratio

(See ratings). Ratios are approximate values. If you need exact values for a specific application, please contact our Engineering.

IR - Übersetzungsverhältnis

(Siehe "Leistungen"). Bei allen Werten der Übersetzungen handelt es sich um approximative Wertangaben. Bei Applikationen, bei denen die exakte Wertangabe erforderlich ist, muss unser Technischer Kundendienst konsultiert werden.

1.2 Designazione

1.2 Designation

1.2 Bezeichnung

05 06 07	**RMI** **CRMI**	**IECT - Tipo IEC e Albero Entrata**	***IECT - IEC type and Input Shaft***	**OV - IEC Typ und Antriebswelle**
		IV - Versione Entrata	***IV - Input Version***	**IV - Antriebausführung**
		IS - Albero Entrata	***IS - Input shaft***	**IS - Antriebswelle**

Possibili accoppiamenti con motori IEC - *Possible couplings with IEC motors* - Mögliche Verbindungen mit IEC-Motoren

					ir - (Rapporto di riduzione / Reduction ratio / Übersetzungsverhältnis)											
					5	7	10	15	20	28	40	49	56	70	80	100
		IECT	IV	IS	—	140	200 280	600	400	—	—	980 1372 1960	—	2800	—	4000 5600 7000 8000 10000
28	28/28-28/40-28/50 -28/63-28/70	—	—	63	—	**11/90** (B14)										
				56	—	**9/120** (B5) - **9/80•** (B14)										
40	40/40-40/50-40/63 -40/70-40/85	G	—	71	**14/160** (B5) **- 14/105** (B14) **-** 14/140 - 14/120 - 14/90•											
				63	**11/140** (B5) **- 11/90•** (B14) **-** 11/160 - 11/120 - 11/105											
				56	**9/120** (B5) **- 9/160 -** 9/140 - 9/105 - 9/90•											
50	50/70-50/85 50/110	G	—	80	**19/120** (B14) **- 19/200** (B5) - 19/160 - 19/140 - 19/105• - 19/90•											
				71	**14/160** (B5) **- 14/105•** (B14) - 14/200 - 14/140 - 14/120 - 14/90•											
				63	**11/140 (B5) - 11/90•** (B14) - 11/200 - 11/160 - 11/120 - 11/105•											
63	63/70-63/85 63/110-63/130	G	—	90	**24/200** (B5) **- 24/140** (B14) - 24/160 - 24/120 - 24/105•											
				80	**19/200** (B5) - **19/120** (B14) - 19/160 - 19/140 - 19/105•											
				71	**14/160** (B5) - **14/105•** (B14) - 14/200 - 14/140 - 14/120											
70	70/85-70/110 70/130	—	—	100 (3)	—	**28/160** (B14)										
				90	—	**24/200** (B5) **-24/140** (B14) 24/160-24/120 -24/105•										
				80	—	**19/200** (B5) - **19/120** (B14) 19/160 - 19/140 - 19/105•										
				71 (1)	—						**14/160** (B5)-**14/105•** (B14) 14/200-14/140-14/120					
85	85/110-85/130 85/150-85/180	—	—	100	—	**28/250** (B5) - **28/160** (B14) 28/200 - 28/140										
				90	—	**24/200** (B5) **- 24/140** (B14) 24/250 - 24/160 - 24/120•										
				80 (1)	—						**19/200** (B5)-**19/120•** B14 19/250-19/160-19/140					
110	110/150-110/180 110/215	—	—	132 (2)(4)	—	**38/300** (B5)										
				112	—	**28/250** (B5) - **28/160** (B14) 28/200										
				100	—	**28/250** (B5) - **28/160** (B14) 28/200										
				90 (1)	—						**24/200** (B5) 24/250 - 24/160					
130	130/180-130/250	—	—	132	—	**38/300** (B5)										
				112	—	**28/250** (B5) 28/200										
				100	—	**28/250** (B5) 28/200										
150	—	—	—	160	—	**42/350** (B5)										
				132	—	**38/300** (B5) 38/350 - 38/250 - 38/200										
				112 (1)	—	**28/250** (B5) 28/350 - 28/300 - 28/200										
				100 (1)	—	**28/250** (B5) 28/350 - 28/300 - 28/200										
180	—	—	—	180	—	**48/350** (B5)										
				160	—	**42/350** (B5) 42/300 - 42/250										
				132	—	**38/300** (B5) 38/350 - 38/250										
215 250	—	—	—	225	—	**60/450** (B5)										
				200	—	**55/400** (B5)										
				180	—	**48/350** (B5)										
				160	—	**42/350** (B5)										
				132	—	**38/300** (B5)										

(1) I riduttori con vite bisporgente vengono realizzati con boccola di riduzione in acciaio (es. per 110 boccola riduzione ø 28/24).

N.B.
Per le grandezze 40, 50, 63 sono possibili solo queste configurazioni:
La bisporgenza è realizzata solo con giunto;

(2) Versione F2 - Non disponibile

(3) Si sconsiglia di montare i riduttori nelle posizioni di montaggio 03 e 04.

(4) **ATTENZIONE!**
(Vedere Paragrafo 1.12).

(1) The and worm gearboxes with double extended input shaft have a steel axle box (e.g. for 110 axle box ø 28/24).

N.B.
These are the only configurations possible for sizes 40, 50, 63
The double extension is made by using a coupling;

(2) Version F2 not available.

(3) We advise you to mount the speed reducer in the positions 03 or 04.

(4) ***WARNING!***
(Look at chapter 1.12).

(1) Getriebe mit beidseitiger Antriebswelle haben eine Stahl-Reduziermuffe (z.B. 110 Muffe 28/24)

Hinweis:
Für die Größen 40, 50, 63 sind nur diese Konfigurationen möglich:
Das doppelte Wellenende wurde nur mit Kupplung hergestellt;

(2) Ausführung F2 - Nicht erhältlich

(3) Wir abraten die Getriebe in position Nummer 03 oder 04 zu montieren.

(4) **ACHTUNG!**
(s. S. 1.12).

1.2 Designazione / *1.2 Designation* / 1.2 Bezeichnung

05 06 07	**CB**	IECT - Tipo IEC e Albero Entrata	*IECT - IEC type and Input Shaft*	OV - IEC Typ und Antriebswelle
		IV - Versione Entrata	*IV - Input Version*	IV - Antriebausführung
		IS - Albero Entrata	*IS - Input shaft*	IS - Antriebswelle

40 - 50 - 70 - 85 - 110

130 - 150 - 180 - 215 - 250

Possibili accoppiamenti con motori IEC - *Possible couplings with IEC motors* - Mögliche Verbindungen mit IEC-Motoren

Size	IECT	IV	IS	ir Tutti / *All* / Alle
40	—	—	63	**11/140** (B5) - **11/90** • (B14) 11/120 - 11/80
			56	**9/120** (B5) - **9/80** (B14) 9/140
50	—	—	71	**14/160** (B5) 14/140
			63	**11/140** (B5) - **11/90** • (B14) 11/160
			56	**9/120** (B5) - **9/80** • (B14) 9/160 - 9/140
70	—	—	90	**24/200** (B5)
			80	**19/200** (B5) 19/160
			71	**14/160** (B5) 14/140
			63	**11/140** (B5) 11/160
85	—	—	90	**24/200** (B5) 24/160
			80	**19/200** (B5) 19/160
			71	**14/160** (B5) 14/140
			63	**11/140** (B5) 11/160
110	—	—	112	**28/250** (B5)
			100	**28/250** (B5)
			90	**24/200** (B5)
			80	**19/200** (B5)

Size	IECT	IV	IS	ir Tutti / *All* / Alle
130 150	—	—	180	**48/350** (B5)
			160	**42/350** (B5)
			132	**38/300** (B5)
			112	**28/250** (B5)
			100	**28/250** (B5)
			90	**24/200** (B5)
			80	**19/200** (B5)
			71	**14/160** (B5)
			63	**11/140** (B5)
180 215	—	—	225	**60/450** (B5)
			200	**55/400** (B5)
			180	**48/350** (B5)
			160	**42/350** (B5)
			132	**38/300** (B5)
			112	**28/250** (B5)
			100	**28/250** (B5)
			90	**24/200** (B5)
			80	**14/160** (B5)
			71	**11/140** (B5)
			63	**9/120** (B5)
250	—	—	280	**75/550** (B5)
			250	**65/550** (B5)
			225	**60/450** (B5)
			200	**55/400** (B5)
			180	**48/350** (B5)
			160	**42/350** (B5)
			132	**38/300** (B5)
			112	**28/250** (B5)
			100	**28/250** (B5)
			90	**24/200** (B5)
			80	**19/200** (B5)
			71	**14/160** (B5)
			63	**11/140** (B5)

Nella tab. sono riportate le grandezze motore accoppiabili (IEC) unitamente alle dimensioni albero/flangia motore standard
Legenda:
11/140 (B5): combinazioni albero/flangia standard
11/120 : combinazioni albero/flangia a richiesta

In table the possible shaft/flange dimensions IEC standard are listed.
Key:
11/140 *: standard shaft/flange combination*
11/120 : shaft/flange combinations upon request

In Tabelle sind die möglichen Welle/Flansch- Abmessungen IEC-Standard aufgelistet.
Legende:
11/140 : Standardkombinationen Welle/Flansch
11/120 : Sonderkombinationen Welle/Flansch

IECT	—	Accoppiamento diretto / *Direct coupling /* Direkte Passung
	G	Accoppiamento con Giunto / *Direct with coupling /* Direkte mit Kupplung
IV	—	Predisposto per accoppiamento con Unità Motrice IEC / *pre arrangement motor IEC /* geeignet für die Kombination mit Antriebseinheit IEC
	N	A richiesta / on Request / Auf Anfrage Predisposto per accoppiamento con Unità Motrice NEMA/ *pre arrangement motor NEMA /* geeignet für die Kombination mit Antriebseinheit NEMA - **CT 36 US GB**
IS	**...**	Grandezza IEC / *Size IEC /*

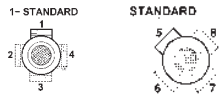

Posizione morsettiera - Vedere - 19 - PMT - Pagina B15
Terminal board position - Look - 19 - PMT - Page B15
Lage des Klemmenkastens - Siehe - 19 - PMT - Auf Seite B15

Designazione motore elettrico Se è richiesto un motoriduttore completo di motore è necessario riportare la designazione di quest'ultimo. A tale proposito consultare il ns. catalogo dei motori elettrici Electronic Line.	*Electric motor designation* *For applications requiring a gearmotor, motor designation must be specified.To this end, please refer to our Electronic Line electric motor catalogue.*	Bezeichnung des Elektromotors Wird ein Getriebemotor komplett mit Elektromotor angefordert, müssen dessen Daten angegeben werden. Diesbezüglich verweisen wir auf unseren Katalog der Elektromotoren "Electronic Line".

1.2 Designazione

1.2 Designation

1.2 Bezeichnung

05 06 07	RI CRI CR	IECT - Tipo IEC e Albero Entrata	*IECT - IEC type and Input Shaft*	OV - IEC Typ und Antriebswelle
		IV - Versione Entrata	*IV - Input Version*	IV - Antriebausführung
		IS - Albero Entrata	*IS - Input shaft*	IS - Antriebswelle

— Nessuna indicazione = diametro standard;

— No indications = standard diameter;

— Keine Angabe = Standard-durchmesser

RI	28	40	50	63	70	85	110	130	150	180	215	250
	(∅ 9)	(∅ 11)	(∅ 14)	(∅ 18)	(∅ 19)	(∅ 24)	(∅ 28)	(∅ 38)	(∅ 42)	(∅ 48)	(∅ 48)	(∅ 55)

CRI	28/28 28/40 28/50 28/63 28/70	40/40 40/50 40/63 40/70 40/85	50/70 50/85 50/110	63/70 63/85 63/110 63/130	70/85 70/110 70/130	85/110 85/130 85/150 85/180	110/150 110/180 110/215	130/180 130/250	—	—	—	—
	(∅ 9)	(∅ 11)	(∅ 14)	(∅ 18)	(∅ 19)	(∅ 24)	(∅ 28)	(∅ 38)	—	—	—	—

CR	—	40	50	—	70	85	110	130	150	180	215	250
	—	(∅ 14)	(∅ 19)	—	(∅ 24)	(∅ 28)	(∅ 32)	(∅ 38)	(∅ 38)	(∅ 48)	(∅ 48)	(∅ 65)

08 BE - Bisporgenza Entrata

1)RI-RMI - CR-CB

— Nessuna indicazione = vite senza bisporgenza;
B = vite con bisporgenza.

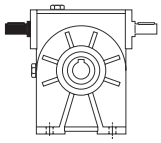

2)CRI-CRMI

— Nessuna indicazione = vite senza bisporgenza;
2.1 - B
CRI28/50..B - Bisporgenza 2°
2.2 - ...B
CRI28/50..28B-Bisporgenza 1°
2.3 - B...B
CRI28/50..B28 B - Bisporgenza 1° e 2°.

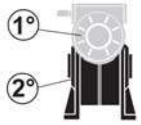

N.B.
Vedere note pagina B10.

BE - Input double extension

1)RI-RMI - CR CB

— No indications = input shaft without double extension;
***B** = double extended input shaft.*

2)CRI-CRMI

— No indications = input shaft without doubleextension;
2.1 - B
***CRI28/50..B**-Double Extension 2°*
***2.2 -...B**:*
***CRI28/50.28B**-Double Extension 1°*
***2.3 - B...B**:*
***CRI28/50..B28 B**-Double Extension 1° and 2°.*

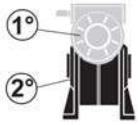

N.B.
Please see notes page B10

BE - Doppelte vorstehende Antriebswelle

1)RI-RMI - CR-CB

— Keine Angabe = Schnecken ohne doppeltes Wellenende
B = Schnecke mit doppeltem Wellenende

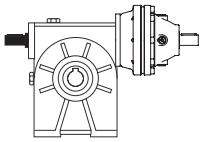

2)CRI-CRMI

— Keine Angabe = Schnecke ohne doppeltes Wellenende
2.1 - B
CRI28/50..B 2°
2.2 - ...B
CRI28/50..28B 1°
2.3- B.. B
CRI28/50..B28 B 1° und 2°

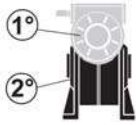

Zu beachten sind bitte die Hinweise auf Seite B10.

09 TOBE - Cuscinetti Conici Uscita

— Nessuna indicazione = Cuscinetti Uscita del tipo radiale a una corona di sfere;

C = Cuscinetti conici in uscita.

N.B. Per Le versioni con limitatore di coppia questa opzione non è disponibile

TOBE - Tapered Output Bearings

— No indications = Output Radial Ball Bearing

***C** = Tapered output bearings.*

***N.B.** For the versions using limiters*

TOBE - Abtriebskegellager

— Keine Angabe = Abtriebslager vom Typ Radial-Kugellager;

C = Ausgangskegellager.

Hinweis: Für die Ausführung mit Drehzahlbegrenzer

1.2 Designazione

10 LOV - Versione Limitatore

Alla designazione del riduttore, determinata reperendo i dati necessari nei rispettivi cataloghi, deve seguire la lettera **L** che contraddistingue il limitatore incorporato, unitamente alla versione desiderata:

1.2 Designation

LOV - Limiter Output Version

*Once the right designation of the gearbox has been selected following the indications reported in the respective catalogues, letter **L** must be added to indicate the built-in limiter together with the required version:*

1.2 Bezeichnung

LOV - Rutschkupplung-Ausführung

Nach der Wahl des Getriebetyps (basie- rend auf den im jeweiligen Katalogab- schnitt zu findenden Angaben) wird der Getriebespezifikation bei Bedarf einer Rut- schkupplung der Buchstabe **L** hinzugefügt. Der Typ der Rutschkupplung muß folgen- dermaßen gekennzeichnet werden:

LP	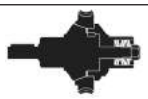	**albero sporgente**	***double extended shaft***	**Vollwelle**
LC		**albero cavo non passante**	***hollow shaft***	**einseitig Hohlwelle**
LF		**albero cavo passante**	***through hollow shaft***	**durchgehend Hohlwelle**

11 LOM - Lato uscita moto limitatore

LOM - Limiter Output Motion

LOM - Rutschkupplung-Abtriebsseite

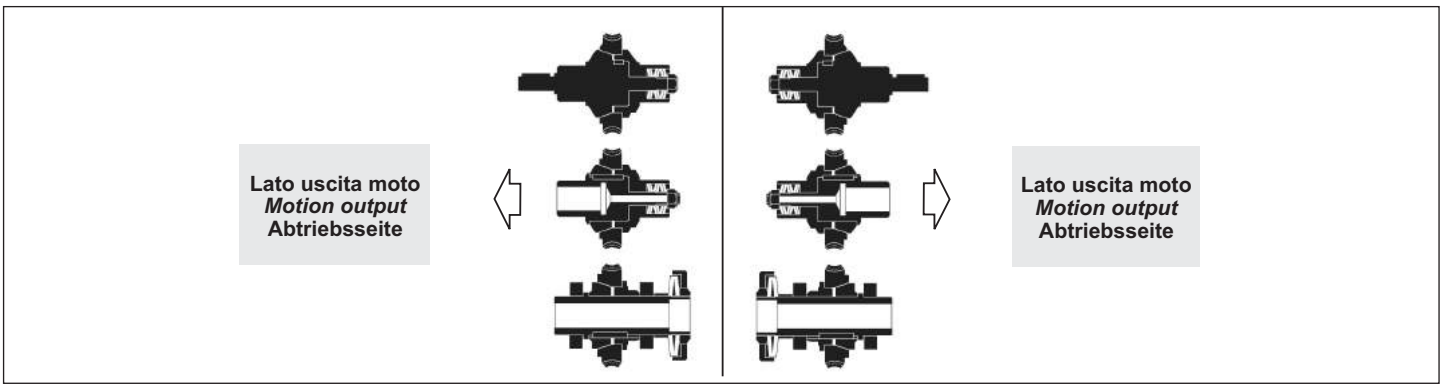

E' molto importante precisare anche il lato dove si desidera l'uscita del moto **A, B,** avvalendosi degli schemi riportati nelle pagine **A 5-6-7-8-9** , ricordando che, ovviamen te, dalla parte opposta dell'uscita sarà possibile effettuare la taratura del limitatore agendo sull'apposito dado o ghiera.

Per la determinazione della posizione dell' al bero di uscita nelle versioni a piedi o PP, è sufficiente osservare il riduttore dalla parte entrata moto o (per la versione di montaggio **D**) lato vite ; se l'albero è desiderato sul lato sinistro, la posizione di montaggio del limitatore sarà in esecuzione **A**, viceversa, se l' albero è a destra si dovrà richiedere l'esecuzione **B**.

Nelle versioni FL o P, l'esecuzione A è considerata quella che prevede l'uscita- moto dal lato del coperchio chiuso o coperchio F0 (lato opposto alla flangia); l'esecuzione B è invece quella in cui l'uscita-moto è dalla stessa parte della flangia FL o P.

A tale proposito si desidera evidenziare che nelle versioni FL è stata riportata l'esecuzione dell'albero di uscita tipo "A".
Anche se tecnicamente fattibile, la ghiera o il dado si trovano all'interno della flangia stessa, pertanto difficilmente accessibili.

N.B. La scelta della posiz. A e B dell' albero uscita è dipendente dalla versione di montaggio del riduttore.

*It is also essential to specify where the output of motion **A** and **B** is required according to the diagram shown in the page **A 5-6-7-8-9** , reminding that on the opposite side of the output it is possible to carry out the limiter calibration by acting on to the appropriate nut or ring nut.*

*In order to determine the position of the output shaft in foot or PP version, it is enough to look at the gearbox from the input side or wormshaft side (mounting position **D**), if shaft is required on to the left hand side, mounting position of limiter will be **A**, on the contrary, if shaft is required on to the right hand side, version **B** should be required.*

In the FL or P versions, execution A is the one that provides the output of motion from the closed cover or F0 cover (on the opposite side of the flange); execution B, instead, is the one that provides the output of motion from FL or P side.

In this context please note that in the version FL the output shaft is executed with type "A". Even if technically possible, washers or nuts are in the flange itself and these are hard to reach.

NOTE. Choice of shaft positions A and B are related to mounting position of gearbox.

Außerdem muß die Abtriebsseite **A**, **B** mit Hilfe der anschließend aufgeführten Skizzen **A 5-6-7-8-9** angegeben werden - unter Berücksichtigung, daß die Einstellmutter sich auf der dem Abtrieb gegenüberlie- genden Seite befindet .

Zur Bestimmung der Lage der Abtrieb- swelle wird ein Getriebe in Fußversion oder Version PP von der Eingangsseite oder (bei der Montageversion **D**) von der Schraubenseite betrachtet: befindet sich die Welle auf der linken Seite, ist die Montagestellung des Drehmomentbegrenzers Ausführung **A**, andernfalls - wenn die Welle sich auf der rechten Seite befindet-handelt es sich um Ausführung **B.**

Bei den Versionen in einfacher P- oder Flanschausfuhrung ist zu beachten, daß bei der Ausführung A der Abtrieb auf der Seite des geschlossenen oder F0-Deckels (gegen- über dem Flansch), liegt folglich befindet sich die Einstellmutter dann im Flansch.

In diesem Zusammenhang wird darauf hingewiesen, dass in der Version FL die Ausgangswelle mit Typ "A" ausgeführt wird.
Auch wenn technisch möglich, sind Unterlegscheiben oder Muttern im Flansch selbst zu finden und daher schwer zu erreichen.

HINWEIS. Die Wahl der Abtriebsposition A oder B ist abhängig von der Montageposition des Getriebes.

1.2 Designazione

12 LHC - Taratura maggiorata limitatore

— Nessuna indicazione = Senza taratura maggiorata;
Disponibile - RI-RMI;

TM = Taratura maggiorata
Disponibile - RI-RMI - CRI-CRMI - CR-CB

13 LSOS - Stato fornitura limitatore

— Nessuna indicazione = Se non specificato il limitatore è fornito NON TARATO.

... = A richiesta è possibile fornire il limitatore tarato con un valore specifico della coppia di slittamento M_{2S} .

Nelle tabelle delle prestazioni sono riportate le coppie di slittamento M_{2S} in funzione del numero dei giri del dado, o della ghiera di regolazione ottenibili con la disposizione standard delle molle.

Altrimenti è possibile accordarsi con nostro Ufficio Commerciale per un valore di taratura specifico.

14 TYPSD - Tipo Albero uscita

— Nessuna indicazione = le dimensioni dell' albero sono secondo il sistema di misura SI (mm);

US = a richiesta
è possibile richiedere alberi con le dimensioni secondo il sistema di misura US (inch).
CT 36 US GB

15 SD - Diametro Albero

Diametro albero:
— Nessuna indicazione = diametro foro standard;
diametro foro opzionale = (vedi tabella).

1.2 Designation

LHC - Limiter HEAVY Calibration

— *No indications = Without HEAVY Calibration;*
Available - RI-RMI

TM = HEAVY Calibration
Available - RI-RMI - CRI-CRMI - CR-CB

LSOS - Limiter-Scope of the supply

— *No indications = If not specified in detail, the limiter is supplied without calibration.*

On request it is possible to provide the limiter with a calibrated slipping torque M2S:

In the following tables the slipping torques M_{2S} are listed according to number of turns of nut or ring nut obtainable with a standard arrangement of the springs.

Otherwise is possible to agree specific setting value with our Sales Dept. .

TYPSD - Typ output shaft

— *No indications = The shaft dimensions are subject to the system of units SI (mm).*

US = On request
It's possible to request shafts dimensions according US measurement system (inch).

CT 36 US GB

SD - Shaft diameter

Shaft Diameter:
— No indications = standard hole diameter;

optional hole diameter *= (see table).*

1.2 Bezeichnung

LHC - Rutschkupplung-Erhöhtes Ansprechmoment

— Keine Angabe = Ohne Erhöhtes Ansprechmoment;
Verfügbar - RI-RMI;

TM = Erhöhtes Ansprechmoment
Verfügbar - RI-RMI - CRI-CRMI - CR-CB

LSOS - Rutschkupplung-Lieferzustand

— Keine Angabe = Wenn nicht detailliert angegeben, wird der Begrenzer ohne Kalibrierung geliefert

Auf Anfrage ist es möglich, den Begrenzer mit einem kalibrierten Rutschmoment M2S zu liefern.

In der folgenden Tabelle sind die Rutsch-momente M_{2S} dargestellt, wie sie je nach Stellung der Sechskant- oder Nutmutter mit der Standardanordnung der Tellerfedern erreicht werden.

Es ist außerdem möglich mit unserer Verkaufsabteilung einen bestimmten Eichwert festzusetzen.

TYPSD - Typ Abtriebwelle

— Keine Angabe = Die Wellendimensionen unterliegen dem Einheitensystem SI (mm)

US = Auf Anfrage
es ist möglich Wellen anzuforden, die den amerikanischen Abmessungen (inch) entsprechen.
CT 36 US GB

SD - Durchmesser Abtirebswelle

Wellendurchmesser:
— Keine Angabe = Standard-Bohrungsdurchmesser
Optionaler Bohrungsdurchmesser = (siehe Tabelle).

RI - RMI	28	40	50	63	70	85	110	130	150	180	215	250
CRI - CRMI	28/28	28/40 40/40	28/50 40/50	28/63 40/63	28/70 40/70 50/70 63/70	40/85 50/85 63/85 70/85	50/110 63/110 70/110 85/110	63/130 70/130 85/130	85/150 110/150	85/180 110/180 130/180	110/215	130/250
CR - CB	—	40	50	—	70	85	110	130	150	180	215	250
Standard (mm)	14	19	24	25	28	32	42	48	55	65	90	110
Optional (mm)	—	(18)	(25)	—	—	(35)	—	—	—	—	—	—

1.2 Designazione

16 MPOF - Lato Flangia Uscita

— Nessuna indicazione = flangia uscita con montaggio destro;

SIN = flange uscita con montaggio sinistro.

1.2 Designation

MPOF - Mounting Position Output

— No indication (standard) = output flange on right side;

***SIN** = output flange on left side.*

1.2 Bezeichnung

MPOF - Montageseite Abtiebsflansch

— Keine Angabe (Standard) = Abtriebs- flansch rechts;

SIN = Abtriebsflansch links.

RI-RMI

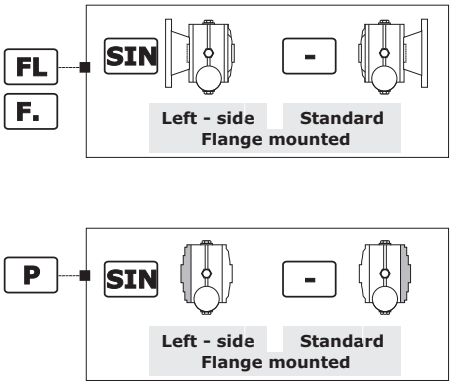

CR-CB 40-50-70-85-110

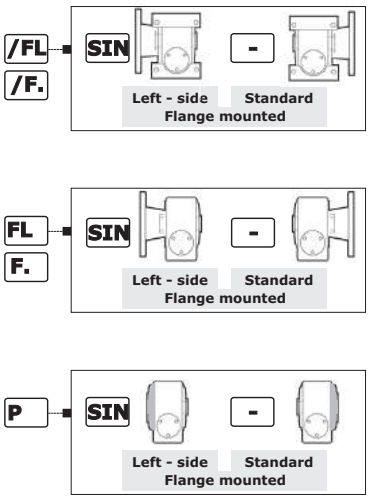

CR-CB - 130-150-180-215-250

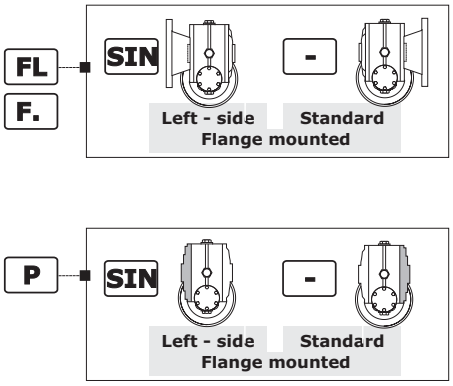

CRI-CRMI

— Fare riferimento ai campi 3 - 3a - 3b
— Reference fields 3 - 3a - 3b
— Referenzfelder 3 - 3a - 3b

17 MP - Posizioni di montaggio

[M2, M3, M4, M5, M6] Posizioni di montaggio con indicazione dei tappi di livello, carico e scarico; se non specificato si considera standard la posizione **M1** (vedi par. 1.4)

MP - Mounting positions

***[M2, M3, M4, M5, M6]** Mounting position with indication of breatherm level and drain plugs; if not specified, standard position is **M1** (see par. 1.4).*

MP - Einbaulagen

Montageposition **[M2, M3, M4, M5, M6]** mit Angabe von . Entlüftung, Schaugläsern und Ablaßschraube. Wenn nicht näher spezifiziert, wird die Standard - position **M1** zugrunde gelegt (s. Abschnitt 1.4).

18 OPT-ACC. - Opzioni

OPT-ACC - Options

OPT-ACC. - Optionen

vedi par. 1.9 see pa. 1.9 s. Abschnitt 1.9	ACC1	AL	Alberi lenti - AL	Output shafts - AL	Abtriebswellen - AL
		AL_BU	Alberi lenti Bisporgenti - AL_BU	Double Output shafts - AL_BU	Beidseitige Abtriebswellen - AL_BU
		PROT.	Coperchio di protezione	Protection cover	Schultzvorrichtungdeckel
	ACC3	BRS	Braccio Reazione Semplice	Torque arm - Single	Drehmomentstütze - Normal
		BRS_VKL	Braccio Reazione Semplice_con boccola_VKL	Torque arm - Single_with VKL_bushing	Drehmomentstütze - Normal_mit VKL - Buchse
	ACC9	ELSX	Vite senza fine - Elica Sinistra	Worm Geraboxe - Left helix	Linksgängige Schraubenlinie der Schneke
vedi Sezione A-1.12 see Section A-1.12 s. Abschnitt A-1.12	OPT.	OPT	Materiale degli anelli di tenuta	Materials of Seals	Dichtungsstoffe
		OPT1	Stato fornitura olio	Scope of the supply - Options - OIL	Optionen - Lieferzustand - Optionen - Öl
		OPT2	Verniciatura	Painting and surface protection	Lackierung und Oberflächenschutzl

19 PMT - Posizioni della Morsettiera

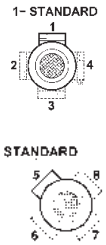

[2, 3, 4] Posizione della morsettiera del motore se diversa da quella standard (1).

N.B.
La configurazione standard della flangia at- tacco motore prevede 4 fori a 45°.

Per le flange contrassegnate con il simbolo (•) (**vedi pagina B10)** i fori per il fissaggio al motore sono disposti in croce (esempio +). Pertanto è opportuno valutare l'ingombro della morsettiera del motore che verrà installato in quanto essa verrà a trovarsi orientata a 45° rispetto agli assi. Per la scelta della posizione della morsettiera rispetto agli assi fare riferimento allo schema seguente (in cui la posizione 5 è quella standard):

PMT - Position Terminal Box

***[2, 3, 4]** Position of the motor terminal box if different from the standard one (1).*

Note.
The standard configuration for the 4 holes is 45° to the axles (like an x: see par 2.3).

*For the flanges marked with (•) (**see page B10)** the holes to fit the motor are on the axles (like a +). Therefore we suggest to check the dimensions of the terminal board of the motor as it will be at 45° to the axles. Please choose the terminal board position refering to the following sketch (in which n° 5 is the standard position):*

PMT - Montagposition Klemmenkasten

Montageposition Klemmenkasten **[2, 3, 4],** wenn abweichend von Standardposition [1] (für Motorgetriebe).

HINWEIS.
In der Standardkonfiguration sind die 4 Flansch- bohrungen im 45°-Winkel zu den Achsen angeordnet
Bei Flanschen, die mit (•) (**Siehe auf Seite B10)** gekennzeichnet sind, sind die Bohrungen auf den Achsen angeord- net (wie ein +). Es sollte deshalb der Platzbedarf des Motorklemmenkastens beachtet werden, da er sich in 45°-Position zu den Achsen befinden wird. Die Lage des Klemmenkastens des Motors wählen Sie bitte anhand der folgenden Skizze (Pos. 5 ist Standardposition):

1.4 Lubrificazione

1.4 Lubrication

1.4 Schmierung

Posizioni di montaggio
Mounting positions
Montagepositionen

RI - RMI

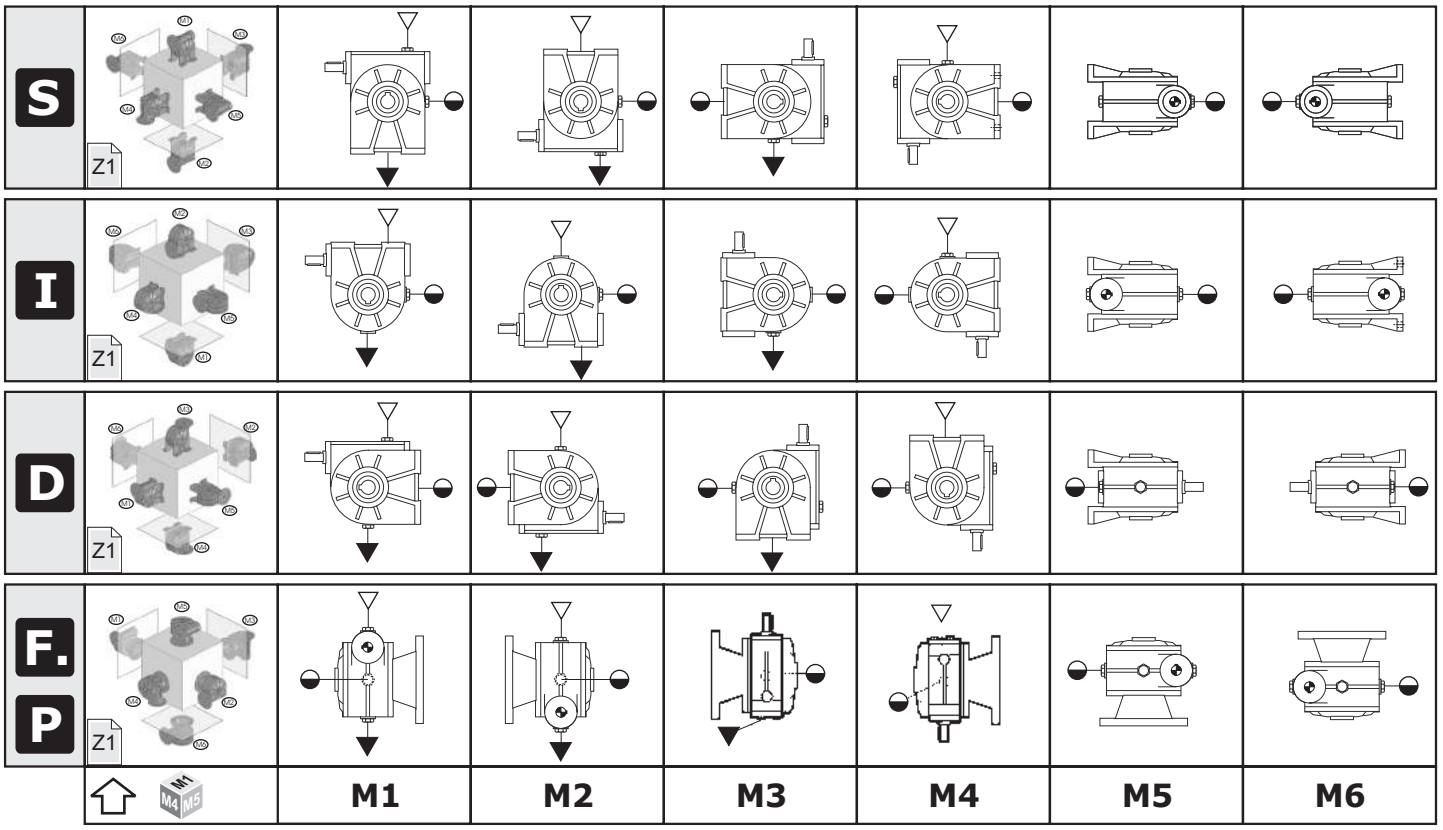

▽ Carico / *Breather plug* / Nachfüllen - Entlüftung
◒ Livello / *Level plug* / Pegel
▼ Scarico / *Drain plug* / Ablassschraube

	Posizioni di montaggio - Mounting positions - Montagepositionen		
		Posizioni Positions Positionen	Prescrizioni da indicare in fase d'ordine Ordering requirements Anforderungen bei der Bestellung
RI RMI	28	M1-M2 M3-M4 M5-M6	**Non necessaria** ***Not necessary*** **Nicht erforderlich**
	40		
	50		
	63		
	70		
	85	M1-M2 M3-M4 M5-M6	**Necessaria** **Necessary** **Erforderlich**
	110		
	130		
	150		
	180		
	215		
	250		

M3-M4
Particolare attenzione va posta per i riduttori montati nelle posizioni M3 e M4 che sono forniti con il cuscinetto schermato.

M3-M4
Particular attention should be paid to worm gearboxes with a shielded bearing mounted in positions M3 and M4.

M3-M4
Besondere Aufmerksamkeit sollte den Getrieben zukommen, die in den Einbaulagen M3 und M4 montiert werden und mit abgeschirmtem Lager geliefert werden.

TARGHETTA - RIDUTTORE

NON NECESSARIA
Indicata sempre nella targhetta del riduttore la posizione di montaggio "M1".

NECESSARIA
La posizione richiesta è indicata nella targhetta del riduttore

Identification Plate - Gearbox

NOT NECESSARY
The mounting position is always indicated on the nameplate “M1”.

NECESSARY
The indication it on the label of the gearbox

Typeschild - Getriebe

NICHT ERFORDERLICH
Die Einbaulage ist immer auf dem Typenschild angegeben “M1”.

ERFORDERLICH
Findet man die angefragte Position auf dem Typenschild des Getriebe

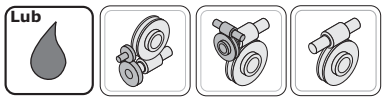

1.4 Lubrificazione

1.4 Lubrication

1.4 Schmierung

	Quantità di lubrificante - *Lubricant Quantity - Schmiermittelmenge - [Kg]*								OPT1	Tappi-Plug-Stopf		
			M1	M2	M3	M4	M5	M6		N°	Diameter	Type
RI RMI	RI-RMI	28	0.030						INOIL_STD	1	1/8"	
		40	0.070							1	1/4"	
	RI	50	0.170							1	1/4"	
	RMI		0.130							1		
	RI	63	0.350							1	3/8"	
	RMI		0.240							1		
	RI	70	0.430							1		
	RMI		0.350							1		
	RI-RMI	85	0.800 0.550 (LP-LC-LF)	0.550						1		
	RI-RMI	110	2.600	2.100					OUTOIL	3	1/2"	
		130	4.100	2.900								
		150	6.000	5.000								
		180	11.00	9.000								
		215	20.00	13.00						4	1"	
		250	29.00	20.00						4		

RI-RMI 85-110-130-150-180-215-250

M1 - Durante il riempimento attenersi ai quantitativi poiché in alcuni casi il livello del lubrificante oltrepassa la spia di livello.

M2-M3-M4-M5-M6 - Quantità indicative; durante il riempimento attenersi alla spia di livello.

Attentione !:
Il tappo di sfiato è allegato solo nei riduttori che hanno più di un tappo olio

Nota: Se in fase d'ordine la posizione di montaggio è omessa, il riduttore verrà fornito con i tappi predisposti per la posizione M1.

Eventuali forniture con predisposizioni tappi diverse da quella indicata in tabella, dovranno essere concordate.

RI-RMI 85-110-130-150-180-215-250

M1 - During filling keep to the required quantities as in some cases the level of the lubricant exceeds the level shown by the indicator:

M2-M3-M4-M5-M6 - Indicative quantities, check the oil sight glass during filling.

Warning!:
A breather plug is supplied only with worm gearboxes that have more than one oil plug

Note: If the mounting position is not specified in the order, the worm gearbox supplied will have plugs pre-arranged for position M1.

The supply of gearboxes with different plug pre-arrangements has to be agreed with the manufacturer.

RI-RMI 85-110-130-150-180-215-250

M1 - Für die Auffüllung sind die angegebenen Mengen zu beachten, da in einigen Fällen der Füllstand des Schmiermittels das Füllstands-Kontrollfenster übersteigt.

M2-M3-M4-M5-M6-Richtungsweisende Mengen, bei der Auffüllung auf das Füllstand-Kontrollfenster Bezug nehmen.

Achtung!:
Der Entlüftungsstopfen ist lediglich bei den Getrieben vorhanden, die über mehr als einen Ölfüllstopfen verfügen

Anmerkung:Sollte in der Auftragsphase die Einbaulage nicht angegeben werden, wird das Getriebe mit Stopfen für die Einbaulage M1.

Lieferungen, die eine Auslegung hinsichtlich der Stopfen aufweisen, die von den Angaben in der Tabelle abweichen, müssen vorab vereinbart werden..

1.4 Lubrificazione

1.4 Lubrication

1.4 Schmierung

Posizioni di montaggio
Mounting positions
Montagepositionen

CRI - CRMI

	Posizioni di montaggio - Mounting positions - Montagepositionen			
	1° 2°	Posizioni Positions Positionen	Prescrizioni da indicare in fase d'ordine Ordering requirements Anforderungen bei der Bestellung	
			SIZE 1	**SIZE 2**
CRI CRMI	28/28	M1-M2 M3-M4 M5-M6	**Non necessaria** ***Not necessary*** **Nicht erforderlich**	**Non necessaria** ***Not necessary*** **Nicht erforderlich**
	28/40			
	28/50			
	28/63			
	28/70			
	40/40			
	40/50			
	40/63			
	40/70			
	40/85			
	50/70			
	50/85			
	50/110			
	63/70			
	63/85			
	63/110			
	63/130			
	70/85			
	70/110			
	70/130			
	85/110	M1-M2 M3-M4 M5-M6	**Necessaria** **Necessary** **Erforderlich**	**Non necessaria** ***Not necessary*** **Nicht erforderlich**
	85/130			
	85/150			
	85/180			
	110/150			
	110/180			
	110/215			
	130/180			
	130/250			

SIZE1
Per i riduttori 85/...; 110/..., 130/... **è necessario** specificare la posizione di montaggio dei riduttori "SIZE 1" - 85 , 110 e 130 facendo riferimento allo schema dei riduttori RI-RMI.

M3-M4
Particolare attenzione va posta per i riduttori montati nelle posizioni M3 e M4 che sono forniti con il cuscinetto schermato.

TARGHETTA - RIDUTTORE

NON NECESSARIA
Indicata sempre nella targhetta del riduttore la posizione di montaggio "M1".

NECESSARIA
La posizione richiesta è indicata nella targhetta del riduttore

SIZE1
For 85/...; 110/..., 130/... , *gearboxes **it is necessary** to specify the mounting position of the gearboxes "SIZE 1" - 85, 110 and 130 referring to the RI-RMI gearbox diagram.*

M3-M4
Particular attention should be paid to worm gearboxes with a shielded bearing mounted in positions M3 and M4.

Identification Plate - Gearbox

NOT NECESSARY
The mounting position is always indicated on the nameplate “M1”.

NECESSARY
The indication it on the label of the gearbox

SIZE1
Für die Getriebe 85/...; 110/..., 130/... , **muss** die Einbaulage des Getriebes "SIZE 1" - 85, 110 und 130 verbindlich angegeben werden.
Dabei ist auf den Anschlussplan der Getriebe RI-RMI Bezug zu nehmen.

M3-M4
Besondere Aufmerksamkeit sollte den Getrieben zukommen, die in den Einbaulagen M3 und M4 montiert werden und mit abgeschirmtem Lager geliefert werden.

Typeschild - Getriebe

NICHT ERFORDERLICH
Die Einbaulage ist immer auf dem Typenschild angegeben “M1”.

ERFORDERLICH
Findet man die angefragte Position auf dem Typenschild des Getriebe

1.4 Lubrificazione

1.4 Lubrication

1.4 Schmierung

Lub	Quantità di lubrificante - *Lubricant Quantity - Schmiermittelmenge - [Kg]*										OPT1	Tappi-Plug-Stopf		
		Size 1	M1	M2	M3	M4	M5	M6	Size 2	M1-M2-M3 M4-M5-M6		N°	Diameter	Type
CRI CRMI	28/28	28	0.030						28	0.030	INOIL_STD	Vedere corrispettiva SIZE1 e SIZE2 facendo riferimento ai riduttori della serie R See corresponding SIZE1 and SIZE2 with reference to gear series R Siehe entsprechend SIZE 1 und SIZE 2 mit Bezug auf die Getriebe der Serie R		
	28/40	28							40	0.070				
	28/50	28							50	0.130				
	28/63	28							63	0.240				
	28/70	28							70	0.350				
	40/40	40	0.070						40	0.070				
	40/50	40							50	0.130				
	40/63	40							63	0.240				
	40/70	40							70	0.350				
	40/85	40							85	0.800 0.550*				
	50/70	50	CRI - 0.170 CRMI - 0.130						70	0.350				
	50/85	50							85	0.800 0.550*				
	50/110	50							110	2.600				
	63/70	63	CRI - 0.350 CRMI - 0.240						70	0.350				
	63/85	63							85	0.800 0.550*				
	63/110	63							110	2.600				
	63/130	63							130	4.100				
	70/85	70	CRI - 0.430 CRMI - 0.350						85	0.800 0.550*				
	70/110	70							110	2.600				
	70/130	70							130	4.100				
	85/110	85	0.800 0.550*	0.550					110	2.600	OUTOIL			
	85/130	85							130	4.100				
	85/150	85							150	6.000				
	85/180	85							180	11.00				
	110/150	110	2.600	2.100					150	6.000				
	110/180	110							180	11.00				
	110/215	110							215	20.00				
	130/180	130	4.100	2.900					180	11.00				
	130/250	130							250	29.00				

Lub

SIZE 1
RI-RMI 85-110-130

M1 - Durante il riempimento attenersi ai quantitativi poiché in alcuni casi il livello del lubrificante oltrepassa la spia di livello.

M2-M3-M4-M5-M6 - Quantità indicative; durante il riempimento attenersi alla spia di livello.

SIZE 2
Durante il riempimento attenersi ai quantitativi poiché in alcuni casi il livello del lubrificante oltrepassa la spia di livello.

SIZE 1-SIZE2
* **RI-RMI 85 -** Versioni LC-LP-LF.

SIZE 1
RI-RMI 85-110-130

M1 - During filling keep to the required quantities as in some cases the level of the lubricant exceeds the level shown by the indicator.

M2-M3-M4-M5-M6 - Indicative quantities, check the oil sight glass during filling.

SIZE 2
During filling keep to the required quantities as in some cases the level of the lubricant exceeds the level shown by the indicator.

SIZE1-SIZE2
***RI-RMI 85 -** Versions LC-LP-LF.

SIZE 1
RI-RMI 85-110-130

M1 - Für die Auffüllung sind die angegebenen Mengen zu beachten, da in einigen Fällen der Füllstand des Schmiermittels das Füllstands-Kontrollfenster übersteigt.

M2-M3-M4-M5-M6-Richtungsweisende Mengen, bei der Auffüllung auf das Füllstand-Kontrollfenster Bezug nehmen.

SIZE 2
Für die Auffüllung sind die angegebenen Mengen zu beachten, da in einigen Fällen der Füllstand des Schmiermittels das Füllstands-Kontrollfenster übersteigt.

SIZE1-SIZE2
* **RI-RMI 85 -** Ausführungen LC-LP-LF.

1.4 Lubrificazione

1.4 Lubrication

1.4 Schmierung

Posizioni di montaggio
Mounting positions
Montagepositionen

CR - CB

40 - 50 - 70 - 85 - 110

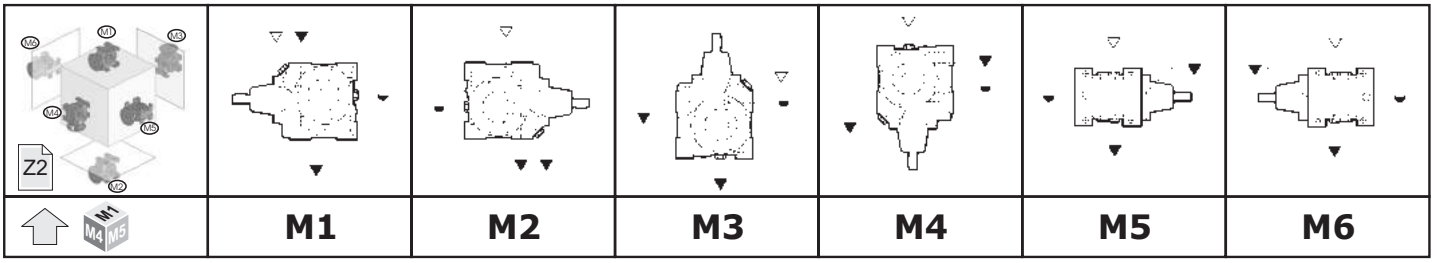

▽ Carico / *Breather plug* / Nachfüllen - Entlüftung
◒ Livello / *Level plug* / Pegel
▼ Scarico / *Drain plug* / Ablassschraube

	Posizioni di montaggio - Mounting positions - Montagepositionen		
		Posizioni Positions Positionen	Prescrizioni da indicare in fase d'ordine Ordering requirements Anforderungen bei der Bestellung
CR CB	40	M1-M2 M3-M4 M5-M6	**Non necessaria** ***Not necessary*** **Nicht erforderlich**
	50		**Necessaria** **Necessary** **Erforderlich**
	70		
	85		
	110		

TARGHETTA - RIDUTTORE

NON NECESSARIA
Indicata sempre nella targhetta del riduttore la posizione di montaggio "M1".

NECESSARIA
La posizione richiesta è indicata nella targhetta del riduttore

Identification Plate - Gearbox

NOT NECESSARY
The mounting position is always indicated on the nameplate “M1”.

NECESSARY
The indication it on the label of the gearbox

Typeschild - Getriebe

NICHT ERFORDERLICH
Die Einbaulage ist immer auf dem Typenschild angegeben “M1”.

ERFORDERLICH
Findet man die angefragte Position auf dem Typenschild des Getriebe

1.4 Lubrificazione

1.4 Lubrication

1.4 Schmierung

Lub	Quantità di lubrificante - *Lubricant Quantity - Schmiermittelmenge - [Kg]*							OPT1	Tappi-Plug-Stopf		
		M1	M2	M3	M4	M5	M6		N°	Diameter	Type
CR CB	40	0.260	0.260	0.260	0.260	0.260	0.260	INOIL_STD	1	1/4"	
	50	0.440	0.600	0.600	0.600	0.440	0.440		1	1/4"	
	70	0.950	1.300	1.300	1.300	0.950	0.950		1	3/8"	
	85	1.550	2.800	2.800	2.800	1.550	1.550	OUTOIL	4	3/8"	
	110	3.600	6.000	6.000	6.000	3.600	3.600		4	1/2"	

Durante il riempimento attenersi ai quantitativi poiché in alcuni casi il livello del lubrificante oltrepassa la spia di livello.

During filling keep to the required quantities as in some cases the level of the lubricant exceeds the level shown by the indicator.

Für die Auffüllung sind die angegebenen Mengen zu beachten, da in einigen Fällen der Füllstand des Schmiermittels das Füllstands-Kontrollfenster übersteigt.

Attentione !:
Il tappo di sfiato è allegato solo nei riduttori che hanno più di un tappo olio

Nota: Se in fase d'ordine la posizione di montaggio è omessa, il riduttore verrà fornito con i tappi predisposti per la posizione M1.

Eventuali forniture con predisposizioni tappi diverse da quella indicata in tabella, dovranno essere concordate.

Warning!:
A breather plug is supplied only with worm gearboxes that have more than one oil plug

Note: If the mounting position is not specified in the order, the worm gearbox supplied will have plugs pre-arranged for position M1.

The supply of gearboxes with different plug pre-arrangements has to be agreed with the manufacturer.

Achtung!:
Der Entlüftungsstopfen ist lediglich bei den Getrieben vorhanden, die über mehr als einen Ölfüllstopfen verfügen

Anmerkung:Sollte in der Auftragsphase die Einbaulage nicht angegeben werden, wird das Getriebe mit Stopfen für die Einbaulage M1.

Lieferungen, die eine Auslegung hinsichtlich der Stopfen aufweisen, die von den Angaben in der Tabelle abweichen, müssen vorab vereinbart werden..

1.4 Lubrificazione

1.4 Lubrication

1.4 Schmierung

Posizioni di montaggio
Mounting positions
Montagepositionen

CR - CB

130 - 150 - 180 - 215 - 250

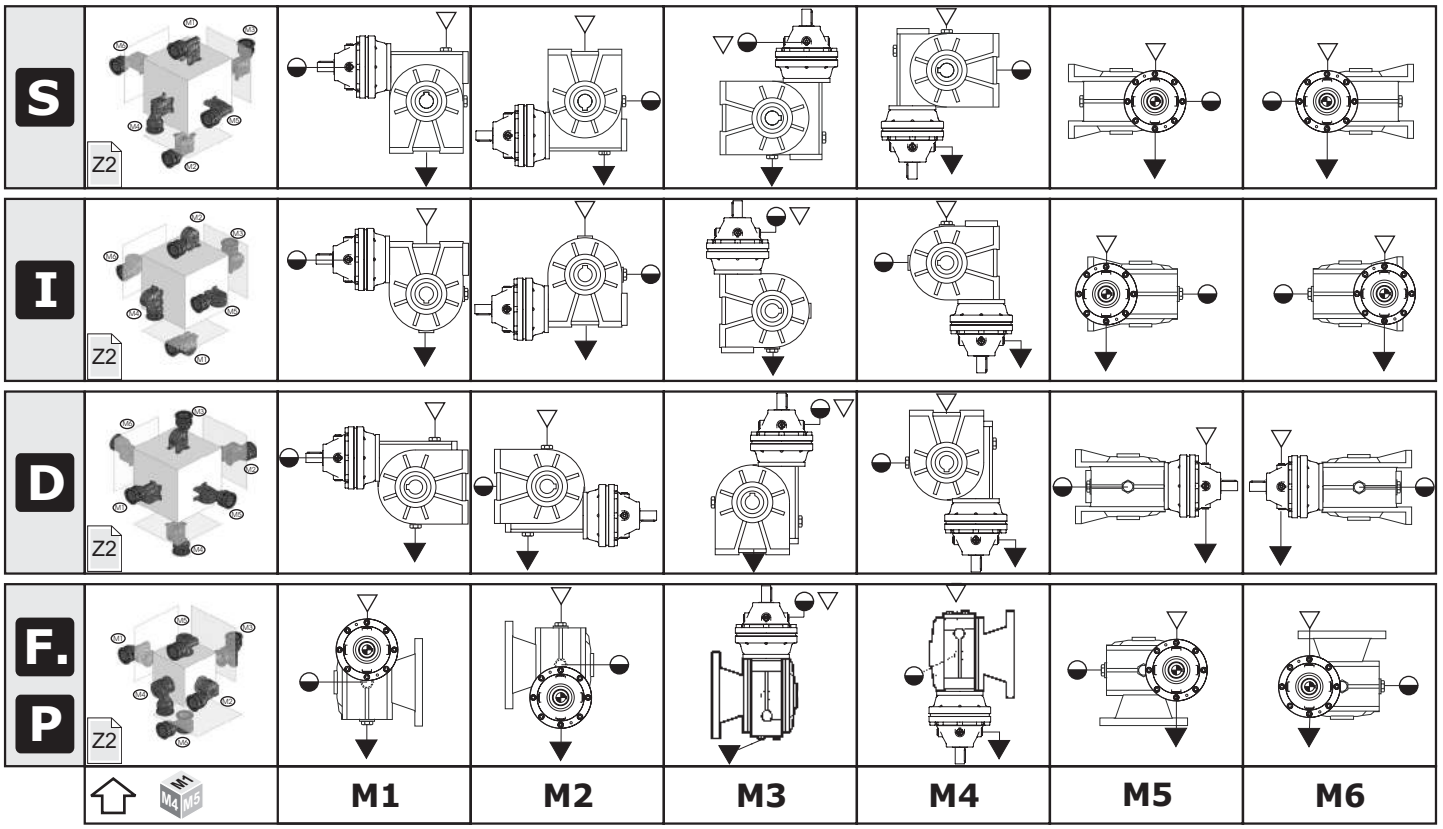

▽ Carico / *Breather plug* / Nachfüllen - Entlüftung
◒ Livello / *Level plug* / Pegel
▼ Scarico / *Drain plug* / Ablassschraube

	Posizioni di montaggio - Mounting positions - Montagepositionen		
		Posizioni Positions Positionen	Prescrizioni da indicare in fase d'ordine Ordering requirements Anforderungen bei der Bestellung
CR CB	130	M1-M2 M3-M4 M5-M6	Necessaria Necessary Erforderlich
	150		
	180		
	215		
	250		

TARGHETTA - RIDUTTORE

NON NECESSARIA
Indicata sempre nella targhetta del riduttore la posizione di montaggio "M1".

NECESSARIA
La posizione richiesta è indicata nella targhetta del riduttore

Identification Plate - Gearbox

NOT NECESSARY
The mounting position is always indicated on the nameplate “M1”.

NECESSARY
The indication it on the label of the gearbox

Typeschild - Getriebe

NICHT ERFORDERLICH
Die Einbaulage ist immer auf dem Typenschild angegeben “M1”.

ERFORDERLICH
Findet man die angefragte Position auf dem Typenschild des Getriebe

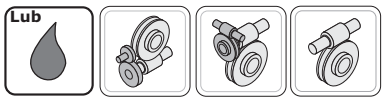

1.4 Lubrificazione

1.4 Lubrication

1.4 Schmierung

Lub	Quantità di lubrificante - *Lubricant Quantity - Schmiermittelmenge - [Kg]*							OPT1	Tappi-Plug-Stopf		
		M1	M2	M3	M4	M5	M6		N°	Diameter	Type
CR CB	130	5.100	3.900	5.750	3.900	3.400	3.400	OUTOIL	5-CB 7-CR	1/2" - 1/4"	
	150	7.900	6.200	9.300	6.200	5.600	5.600				
	180	13.20	10.70	15.85	10.70	9.850	9.850				
	215	23.45	14.90	27.55	14.90	13.95	13.95		6-CB 8-CR	1" - 1/4"	
	250	34.45	22.90	40.95	22.90	21.45	21.45		6-CB 8-CR	1" - 3/8"	

B

Quantità indicative; durante il riempimento attenersi alla spia di livello.

Attentione !:
Il tappo di sfiato è allegato solo nei riduttori che hanno più di un tappo olio

Nota: Se in fase d'ordine la posizione di montaggio è omessa, il riduttore verrà fornito con i tappi predisposti per la posizione M1.

Eventuali forniture con predisposizioni tappi diverse da quella indicata in tabella, dovranno essere concordate.

Indicative quantities, check the oil sight glass during filling.

Warning!:
A breather plug is supplied only with worm gearboxes that have more than one oil plug

Note: If the mounting position is not specified in the order, the worm gearbox supplied will have plugs pre-arranged for position M1.

The supply of gearboxes with different plug pre-arrangements has to be agreed with the manufacturer.

Richtungsweisende Mengen, bei der Auffüllung auf das Füllstand-Kontrollfenster Bezug nehmen.

Achtung!:
Der Entlüftungsstopfen ist lediglich bei den Getrieben vorhanden, die über mehr als einen Ölfüllstopfen verfügen

Anmerkung:Sollte in der Auftragsphase die Einbaulage nicht angegeben werden, wird das Getriebe mit Stopfen für die Einbaulage M1.

Lieferungen, die eine Auslegung hinsichtlich der Stopfen aufweisen, die von den Angaben in der Tabelle abweichen, müssen vorab vereinbart werden..

1.5 Carichi radiali e assiali

Quando la trasmissione del moto avviene tramite meccanismi che generano carichi radiali sull'estremità dell'albero,è necessario verificare che i valori risultanti non eccedono quelli indicati nelle tabelle.

Nella Tab. 2.5 - 2.6 sono riportati i valori dei carichi radiali ammissibili per l'albero veloce (Fr_1). Come carico assiale ammissibile contemporaneo si ha:

$$Fa_1 = 0.2 \times Fr_1$$

1.5 Axial and overhung loads

Should transmission movement determine radial loads on the angular shaft end, it is necessary to make sure that resulting values do not exceed the ones indicated in the tables.

In Table 2.5 - 2.6 permissible radial load for input shaft are listed (Fr_1). Contemporary permissible axial load is given by the following formula:

$$Fa_1 = 0.2 \times Fr_1$$

1.5 Radiale und Axiale Belastungen

Wird das Wellenende auch durch Radialkräfte belastet, so muß sichergestellt werden, daß die resultierenden Werte die in der Tabelle angegebenen nicht überschreiten.

In Tabelle 2.5 - 2.6 sind die Werte der zulässigen Radialbelastungen für die Antriebswelle (Fr_1) angegeben. Die Axialbelastung beträgt dann:

$$Fa_1 = 0.2 \times Fr_1$$

Tab. 2.5

RI

CRI

n_1 min^{-1}	Fr_1 (N)											
	RI - CRI											
	28	40	50	63	70	85	110	130	150	180	215	250
2800	51	187	272	357	425	595	850	1360	1870	2125	2593	3370
1400	60	220	320	420	500	700	1000	1600	2200	2500	3250	4225
900	60	250	350	460	530	800	1200	1800	2350	2700	3500	4600
700	70	280	400	500	570	900	1300	2000	2500	3000	3800	4800
500	70	310	450	530	600	1000	1450	2200	2700	3200	4000	5300

Tab. 2.6

CR

n_1 min^{-1}	Fr_1 (N)									
	CR									
	40	50	70	85	110	130	150	180	215	250
2800	468	510	723	808	1275	900	900	4000	4000	7000
1400	550	600	850	950	1500	1000	1000	5000	5000	8000
900	605	660	935	1045	1650	1200	1200	6000	6000	10000

In Tab. 2.7 - 2.8 sono riportati i valori dei carichi radiali ammissibili per l'albero lento (Fr_2) . Come carico assiale ammissibile contemporaneo si ha:

$$Fa_2 = 0.2 \times F_{r2}$$

In Table 2.6 - 2.8 permissible radial loads for output shaft are listed (Fr_2).
Permissible axial load is given by the following formula:

$$Fa_2 = 0.2 \times Fr_2$$

In Tabelle 2.6 - 2.8 sind die Werte der zulässigen Radialbelastungen für die Abtriebswelle angegeben.
Als zulässige Axialbelas- tung gilt:

$$Fa_2 = 0.2 \times Fr_2$$

Tab. 2.7

RI
RMI

CRI
CRMI

n_2 min^{-1}	Fr_2 (N)									
	RI - RMI - CRI - CRMI									
	28	40	50	63	70	85	110	130	150	180
400	506	686	925	946	1279	1626	2168	2890	4263	4516
280	595	808	1088	1114	1505	1913	2550	3400	5015	5313
200	700	950	1280	1310	1770	2250	3000	4000	5900	6250
140	750	1050	1450	1680	2350	2400	3150	4250	6700	6900
93	800	1200	1620	1740	2700	2500	3600	4800	7500	7500
70	900	1350	1850	1930	3100	2650	4150	5300	8400	8500
50	950	1500	2100	2150	3300	3560	4850	6600	9400	10300
35	1000	1600	2230	2300	3700	3850	5700	7500	10100	11500
29	1070	1700	2400	2500	3900	4400	6200	8200	11100	12500
25	1130	1800	2580	2700	4100	4620	6600	8750	12000	13400
20	1200	1950	2700	2900	4300	5150	7200	9600	12700	15200
18	1280	2100	2850	3100	4450	5500	7800	10300	14000	16300
14	1430	2300	3200	3300	4700	5800	8250	10700	15000	17000

Nei riduttori CRI-CRMI utilizzare i carichi a 14 min^{-1} (ovviamente i valori indicati in tabella si riferiscono al secondo riduttore).

Use 14 min^{-1} loads in the CRI-CRMI gearboxes (obviously the values in the table refer to the second gearbox).

Bei den Getrieben CRI-CRMI sind Lasten mit 14 min^{-1} zu verwenden (die in der Tabelle angegebenen Werte beziehen sich natürlich auf das zweite Getriebe).

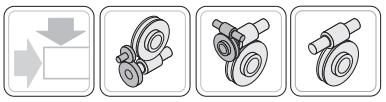

1.5 Carichi radiali e assiali

1.5 Axial and overhung loads

1.5 Radiale und Axiale Belastungen

CR
CB

Tab. 2.8

n_2 min^{-1}	Fr_2 (N) CR - CB							
	40	**50**	**70**	**85**	**110**	**130**	**150**	**180**
30	1700	2400	3900	4400	6200	8200	11100	12500
27	1800	2580	4100	4620	6600	8750	12000	13400
23	1850	2600	4200	4800	6800	8900	12500	14000
20	1950	2700	4300	5150	7200	9600	12700	15200
16	2100	2850	4450	5500	7800	10300	14000	16300
13	2300	3200	4700	5800	8250	10700	15000	17000
10	2300	3200	4700	5800	8250	10700	15000	17000
5	2300	3350	4700	5800	8250	10700	15000	17000

B

A richiesta possono essere fornite versioni rinforzate con cuscinetti a rulli conici sulla corona in grado di sopportare carichi superiori a quelli ammessi dalle versioni normali.
Si veda a tal proposito la tabella 2.9 - 2.10, in cui sono riportati i valori dei carichi radiali e assiali ammissibili sull'albero uscita nel caso di cuscinetti conici sulla corona. Si consiglia, in questi casi, di adottare versioni flangiate, verificando che il carico assiale venga interamente assorbito dal cuscinetto alloggiato nella flangia di fissaggio.
Si sconsiglia, invece (nei riduttori RI-RMI, CRI-CRMI) la versione a piede , in quanto la resistenza meccanica della struttura non è sufficiente a garantire la necessaria sicurezza sia statica sia dinamica (urti e sovraccarichi).
Tale soluzione non è prevista sulla grandezza 28.

In order to increase the load capacity of the gearboxes it is possible to fit taper roller bearings on to the output shaft. Such reinforced versions are available upon request.
With regard to this reinforced version, let see output radial and axial load values shown on tab. 2.9 - 2.10. It's advisable to use flange mounted versions and to make sure that the axial load is absorbed by the bearing, housed in the fixing flange.
The foot mounted version is not recommended, because the structural safety is very reduced, with regard both to static and dynamic conditions.

Please note that this solution is not available for size 28.

Für größere Belastungen stehen auf Wunsch auch verstärkte Ausführungen mit Kegelrollenlagern für die Schneckenwelle zur Verfügung.
Tabelle 2.9 - 2.10 listet die zulässigen Radial- und Axiallasten bei Verwendung von Kegelrollenlagern auf. Es wird in diesen Fällen empfohlen, Flanschausführungen zu verwenden und sicherzustellen, daß die axiale Last vollständig vom Lager, das sich im Befestigungsflansch befindet, aufgenommen wird. Die Fuâversion empfiehlt sich in diesem Falle nicht, da deren Festigkeit nicht ausreicht, um die erforderliche Sicherheit gegen Stoße und Überlasten sowohl in statischer wie in dynamischer Hinsicht zu gewährleisten.
Hinweis:

Für die Baugröße 28 ist diese Lösung nicht vorgesehen.

RI
RMI

CRI
CRMI

Tab. 2.9

CARICHI RADIALI - ASSIALI CON CUSCINETTI CONICI SULLA CORONA
AXIAL AND OVERHUNG LOADS WITH TAPER ROLLER BEARINGS ON WORMWHEEL
RADIALE UND AXIALE BELASTUNGEN MIT KEGELROLLENLAGERN AUF DEM SCHNECKENRAD [N]

n_2 (rpm)	RI - RMI																					
	40		**50**		**63**		**70**		**85**		**110**		**130**		**150**		**180**		**215**		**250**	
	Fr_2	Fa_2	Fr_2	Fa_2	Fr_2	Fa_2	Fr_2	Fa_2	Fr_2	Fa_2	Fr_2	Fa_2	Fr_2	Fa_2	Fr_2	Fa_2	Fr_2	Fa_2	Fr2	Fa2	Fr2	Fa2
400	2076	2708	4603	5325	4693	5415	5415	6588	5415	7220	7671	9837	7491	10559	14440	18772	17148	22382	20921	27306	25105	32767
280	2185	2850	4845	5605	4940	5700	5700	6935	5700	7600	8075	10355	7885	11115	15200	19760	18050	23560	22021	28743	26425	34492
200	2300	3000	5100	5900	5200	6000	6000	7300	6000	8000	8500	10900	8300	11700	16000	20800	19000	24800	23180	30256	27816	36307
140	2300	3000	5600	6500	5750	6650	6700	8200	6600	8800	9200	11800	8400	11850	17500	22700	20000	26000	24400	31720	29280	38064
93	2300	3000	6300	7300	6500	7550	7500	9150	7600	10100	9200	11800	9000	12700	18500	24000	21000	27400	25620	33428	30744	40114
70	2300	3000	6550	7600	6200	7200	7600	9300	6500	8650	9200	11800	9500	13400	19200	25000	22000	28700	26840	35014	32208	42017
50	2300	3000	6900	8000	6900	8000	8700	10600	7900	10500	10600	13600	10000	14100	20000	26000	23000	30000	28060	36600	33672	43920
35	2300	3000	6900	8000	6900	8000	9000	11000	9000	12000	13900	17800	12600	17750	20000	26000	23000	30000	28060	36600	33672	43920
29	2300	3000	6900	8000	6900	8000	9000	11000	9000	12000	14800	19000	13600	19200	20000	26000	23000	30000	28060	36600	33672	43920
25	2300	3000	6900	8000	6900	8000	9000	11000	9000	12000	14800	19000	14600	20600	20000	26000	23000	30000	28060	36600	33672	43920
20	2300	3000	6900	8000	6900	8000	9000	11000	9000	12000	14800	19000	15600	22000	20000	26000	23000	30000	28060	36600	33672	43920
18	2300	3000	6900	8000	6900	8000	9000	11000	9000	12000	14800	19000	15600	22000	20000	26000	23000	30000	28060	36600	33672	43920

1.5 Carichi radiali e assiali

1.5 Axial and overhung loads

1.5 Radiale und Axiale Belastungen

Tab. 2.10

CR
CB

CARICHI RADIALI - ASSIALI CON CUSCINETTI CONICI SULLA CORONA
AXIAL AND OVERHUNG LOADS WITH TAPER ROLLER BEARINGS ON WORMWHEEL
RADIALE UND AXIALE BELASTUNGEN MIT KEGELROLLENLAGERN AUF DEM SCHNECKENRAD [N]

n_2 (rpm)	CR - CB																			
	40		50		70		85		110		130		150		180		215		250	
	Fr_2	Fa_2	Fr_2	Fa_2	Fr_2	Fa_2	Fr_2	Fa_2	Fr_2	Fa_2	Fr_2	Fa_2	Fr_2	Fa_2	Fr_2	Fa_2	Fr2	Fa2	Fr2	Fa2
60	2300	3000	6550	7600	7600	9300	6500	8650	9200	11800	9500	13400	19200	25000	22000	28700	26840	35014	32208	42017
50	2300	3000	6900	8000	8700	10600	7900	10500	10600	13600	10000	14100	20000	26000	23000	30000	28060	36600	33672	43920
40	2300	3000	6900	8000	9000	11000	9000	12000	13900	17800	12600	17750	20000	26000	23000	30000	28060	36600	33672	43920
30	2300	3000	6900	8000	9000	11000	9000	12000	14800	19000	13600	19200	20000	26000	23000	30000	28060	36600	33672	43920
25	2300	3000	6900	8000	9000	11000	9000	12000	14800	19000	14600	20600	20000	26000	23000	30000	28060	36600	33672	43920
20	2300	3000	6900	8000	9000	11000	9000	12000	14800	19000	15600	22000	20000	26000	23000	30000	28060	36600	33672	43920
15	2300	3000	6900	8000	9000	11000	9000	12000	14800	19000	15600	22000	20000	26000	23000	30000	28060	36600	33672	43920
10	2300	3000	6900	8000	9000	11000	9000	12000	14800	19000	15600	22000	20000	26000	23000	30000	28060	36600	33672	43920
5	2300	3000	6900	8000	9000	11000	9000	12000	14800	19000	15600	22000	20000	26000	23000	30000	28060	36600	33672	43920

I carichi radiali indicati nelle tabelle si intendono applicati a metà della sporgenza dell'albero e sono riferiti ai riduttori operanti con fattore di servizio 1.
Valori intermedi relativi a velocità non riportate possono essere ottenuti per interpolazione considerando però che Fr_1 a 500 min^{-1} e Fr_2 a 14 min^{-1} rappresentano i carichi massimi consentiti.
Per i carichi non agenti sulla mezzeria dell'albero lento o veloce si ha:

a 0.3 della sporgenza:
$Fr_x = 1.25 \times Fr_{1-2}$
a 0.8 dalla sporgenza:
$Fr_x = 0.8 \times Fr_{1-2}$

The radial loads shown in the tables are applied on the centre line of the shaft extension and are related to gearboxes working with service factor 1.
Intermediate values of speeds that are not listed can be obtained through interpolation but it must be considered that Fr_1 at 500 min^{-1} and Fr_2 at 14 min^{-1} represent the maximum allowable loads.
For loads which are not applied on the centre line of the output or input shaft, following values will be obtained:

at 0.3 from extension:
$Fr_x = 1.25 \times Fr_{1-2}$
at 0.8 from extension:
$Fr_x = 0.8 \times Fr_{1-2}$

Bei den in der Tabelle angegebenen Ra dialbelastungen wird eine Krafteinwirkung auf die Mitte des Wellenendes zugrunde gelegt; außerdem arbeiten die Getriebe mit Betriebsfaktor 1. Zwischenwerte für nicht aufgeführte Drehzahlen können durch Interpolation ermittelt werden. Hierbei ist jedoch zu berücksichtigen, daß die Werte von Fr_1 bei 500 min^{-1} und von Fr_2 bei 14 min^{-1} die Maximalbelastungen repräsentieren.
Bei Lasten, die nicht auf die Mitte der Ab- bzw. Antriebswellen wirken, legt man folgende Werte zugrunde:

0.3 vom Wellenabsatz:
$Fr_x = 1.25 \times Fr_{1-2}$
0.8 vom Wellenabsatz:
$Fr_x = 0.8 \times Fr_{1-2}$

Tab. 2.11

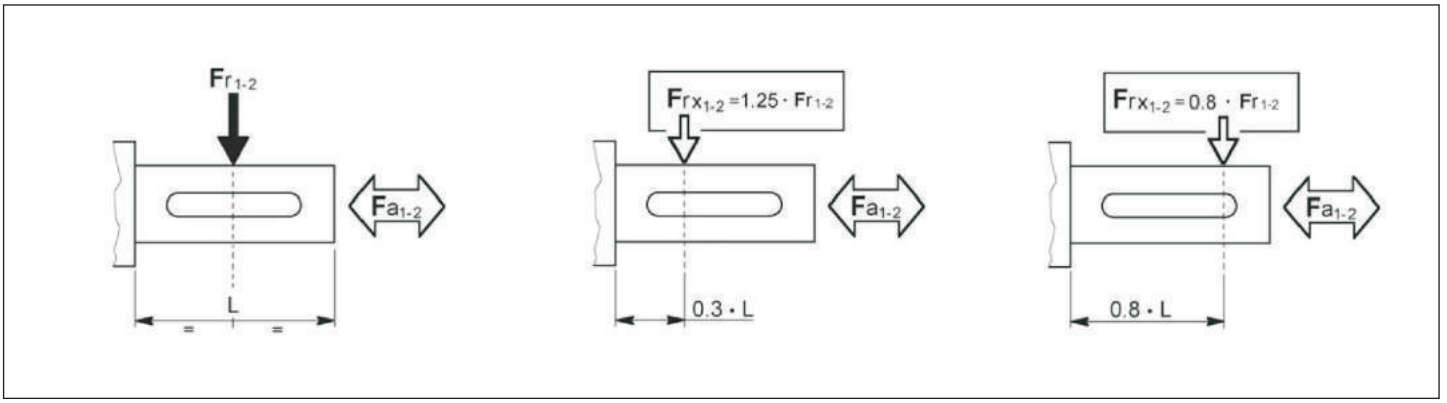

1.6 Prestazioni riduttori RI

1.6 RI Gearboxes performances

1.6 Leistungen der RI-Getriebe

RI 28

Kg 1.4

ir	n_1 = 2800 min^{-1} ⚠				n_1 = 1400 min^{-1}				n_1 = 900 min^{-1}				n_1 = 500 min^{-1}				RMI	RMI...G
	n_2 min^{-1}	T_{2M} Nm	P kW	RD %	n_2 min^{-1}	T_{2M} Nm	P kW	RD %	n_2 min^{-1}	T_{2M} Nm	P kW	RD %	n_2 min^{-1}	T_{2M} Nm	P kW	RD %	IEC	
7	400	11	0.56	83	200	15	0.39	81	129	18	0.31	79	71	22	0.21	78	63-56	–
10	280	13	0.47	81	140	17	0.32	79	90	20	0.24	77	50	24	0.17	76		
15	187	14	0.35	78	93	18	0.23	75	60	20	0.17	73	33	24	0.12	71		
20	140	12	0.23	75	70	15	0.15	72	45	18	0.12	69	25	21	0.08	67		
28	100	15	0.23	69	50	19	0.16	64	32	21	0.12	61	17.9	25	0.08	58		
40	70	13	0.15	64	35	16	0.10	59	23	18	0.08	56	12.5	21	0.05	53		
49	57	12	0.12	61	29	15	0.08	56	18.4	17	0.06	52	10.2	20	0.04	49	56	
56	50	12	0.11	59	25	15	0.07	54	16.1	17	0.06	52	8.9	19	0.04	47		
70	40	11	0.08	55	20	13	0.06	49	12.9	15	0.04	46	7.1	17	0.03	43		
80	35	10	0.07	50	17.5	12	0.05	45	11.3	13	0.04	41	6.3	15	0.03	38		
100	28	9	0.06	47	14.0	10	0.04	41	9.0	10	0.02	38	5.0	11	0.02	35		

RI 40

Kg 2.1

ir	n_1 = 2800 min^{-1} ⚠				n_1 = 1400 min^{-1}				n_1 = 900 min^{-1}				n_1 = 500 min^{-1}				RMI	RMI...G
	n_2 min^{-1}	T_{2M} Nm	P kW	RD %	n_2 min^{-1}	T_{2M} Nm	P kW	RD %	n_2 min^{-1}	T_{2M} Nm	P kW	RD %	n_2 min^{-1}	T_{2M} Nm	P kW	RD %	IEC	
5	560	27	1.8	86	280	37	1.28	85	180	44	1.00	83	100	54	0.69	82	71-63-56	71-63-56
7	400	27	1.3	84	200	37	0.93	83	129	44	0.73	81	71	54	0.50	80		
10	280	31	1.1	83	140	42	0.76	81	90	49	0.58	79	50	59	0.40	78		
15	187	32	0.78	80	93	42	0.53	77	60	49	0.41	75	33	59	0.28	73		
20	140	29	0.56	76	70	37	0.37	73	45	43	0.29	70	25	51	0.20	67		
28	100	34	0.50	71	50	43	0.34	67	32	50	0.26	64	17.9	59	0.18	61		
40	70	32	0.36	65	35	40	0.24	60	23	45	0.19	56	12.5	53	0.13	53		
49	57	30	0.29	62	29	38	0.20	57	18.4	43	0.16	53	10.2	50	0.11	49	63-56	
56	50	28	0.24	60	25	36	0.17	54	16.1	40	0.13	51	8.9	47	0.09	47		
70	40	23	0.18	53	20	28	0.12	47	12.9	32	0.10	44	7.1	37	0.07	39		
80	35	21	0.15	50	17.5	26	0.11	44	11.3	29	0.09	40	6.3	34	0.06	36		
100	28	23	0.13	51	14.0	28	0.09	45	9.0	30	0.07	41	5.0	31	0.04	38		

RI 50

Kg 3.8

ir	n_1 = 2800 min^{-1} ⚠				n_1 = 1400 min^{-1}				n_1 = 900 min^{-1}				n_1 = 500 min^{-1}				RMI	RMI...G
	n_2 min^{-1}	T_{2M} Nm	P kW	RD %	n_2 min^{-1}	T_{2M} Nm	P kW	RD %	n_2 min^{-1}	T_{2M} Nm	P kW	RD %	n_2 min^{-1}	T_{2M} Nm	P kW	RD %	IEC	
5	560	45	3.0	87	280	65	2.2	86	180	75	1.7	85	100	95	1.18	84	80-71	80-71-63
7	400	50	2.5	85	200	68	1.7	84	129	81	1.3	83	71	100	0.91	82		
10	280	55	1.9	84	140	73	1.3	82	90	86	1.0	81	50	105	0.70	79		
15	187	58	1.4	82	93	76	0.93	80	60	89	0.71	79	33	106	0.48	77		
20	140	57	1.1	79	70	74	0.71	76	45	86	0.55	74	25	102	0.38	71		
28	100	62	0.88	74	50	80	0.60	70	32	92	0.46	67	17.9	109	0.32	64	80-71-63	
40	70	64	0.67	70	35	81	0.45	66	23	92	0.34	63	12.5	108	0.24	59		
49	57	57	0.51	67	29	72	0.34	63	18.4	82	0.27	59	10.2	96	0.19	55	71-63	
56	50	55	0.44	65	25	69	0.30	60	16.1	78	0.23	56	8.9	91	0.16	53		
70	40	52	0.36	61	20	64	0.24	56	12.9	72	0.19	52	7.1	84	0.13	48		
80	35	47	0.30	57	17.5	58	0.21	51	11.3	66	0.17	47	6.3	75	0.11	43		
100	28	42	0.23	54	14.0	52	0.16	48	9.0	59	0.13	44	5.0	60	0.08	40		

⚠ ATTENZIONE!

Per situazioni con velocità di ingresso particolari attenersi alla tabella pagina A2.

I pesi riportati sono indicativi e possono variare in funzione della versione del riduttore.

N.B. Per i riduttori evidenziati dal doppio bordo nella colonna delle potenze è necessario verificare lo scambio termico del riduttore (come nel par. 1.7-A). Per maggiori informazioni contattare l'ufficio tecnico STM.

⚠ WARNING!

If in presence of non standard input speed please attain to the page A2.

Listed weights are for reference only and can vary according to the gearbox version.

NOTE. Please pay attention to the frame around the input power value: for this gearboxes it's important to check the thermal capacity (comp. chapter 1.7-A). For details please contact our technical department.

⚠ ACHTUNG!

Mit unstandardisierte Antriebsgeschwindigkeit bitte auf Seite A2.

Die angegebenen Gewichte sind Richtwerte und können je nach Getriebeversion etwas variieren.

HINWEIS. Sind in den Tabellen Nennleistungen eingerahmt, so ist die thermische Leistungsgrenze der Getriebe zu beachten (s. S. 1.7-A).
Für weitere Informationen wenden Sie sich bitte and unser technisches Büro.

1.6 Prestazioni riduttori RI — *1.6 RI Gearboxes performances* — 1.6 Leistungen der RI-Getriebe

RI 63

Kg 6.0

ir	n_1 = 2800 min^{-1}				n_1 = 1400 min^{-1}				n_1 = 900 min^{-1}				n_1 = 500 min^{-1}				RMI	RMI...G
	n_2 min^{-1}	T_{2M} Nm	P kW	RD %	n_2 min^{-1}	T_{2M} Nm	P kW	RD %	n_2 min^{-1}	T_{2M} Nm	P kW	RD %	n_2 min^{-1}	T_{2M} Nm	P kW	RD %	IEC	
5	560	79	5.3	88	280	110	3.8	86	180	132	2.9	86	100	164	2.0	85	90-80-71	90-80-71
7	400	84	4.1	86	200	115	2.9	84	129	137	2.2	84	71	169	1.5	83		
10	280	93	3.2	84	140	126	2.2	83	90	149	1.7	81	50	182	1.2	80		
15	187	98	2.3	82	93	131	1.6	80	60	153	1.2	78	33	184	0.85	76		
20	140	104	1.9	80	70	136	1.3	77	45	158	0.99	75	25	189	0.69	72		
28	100	105	1.5	75	50	135	1.0	71	32	156	0.77	68	17.9	186	0.54	65		
40	70	113	1.2	71	35	145	0.79	67	23	166	0.61	64	12.5	195	0.43	60		
49	57	98	0.85	69	29	125	0.58	64	18.4	142	0.45	61	10.2	166	0.31	57	80-71	
56	50	101	0.79	67	25	127	0.54	62	16.1	145	0.42	58	8.9	169	0.29	54		
70	40	94	0.62	63	20	117	0.42	58	12.9	133	0.33	54	7.1	154	0.23	50		
80	35	88	0.53	61	17.5	110	0.37	55	11.3	124	0.29	51	6.3	144	0.20	47		
100	28	80	0.41	57	14.0	99	0.28	51	9.0	112	0.22	47	5.0	125	0.15	43		

RI 70

Kg 7.5

ir	n_1 = 2800 min^{-1}				n_1 = 1400 min^{-1}				n_1 = 900 min^{-1}				n_1 = 500 min^{-1}				RMI	RMI...G
	n_2 min^{-1}	T_{2M} Nm	P kW	RD %	n_2 min^{-1}	T_{2M} Nm	P kW	RD %	n_2 min^{-1}	T_{2M} Nm	P kW	RD %	n_2 min^{-1}	T_{2M} Nm	P kW	RD %	IEC	
7	400	95	4.6	86	200	132	3.3	85	129	158	2.5	84	71	195	1.8	83	112-100 90-80	—
10	280	105	3.7	84	140	142	2.5	83	90	168	1.9	82	50	205	1.3	80		
15	187	109	2.6	82	93	145	1.8	80	60	170	1.4	78	33	205	0.94	76		
20	140	115	2.1	80	70	151	1.4	77	45	175	1.1	75	25	210	0.76	72	90-80	
28	100	113	1.6	74	50	147	1.1	71	32	170	0.84	68	17.9	202	0.59	64		
40	70	126	1.3	71	35	162	0.89	67	23	186	0.68	64	12.5	219	0.48	60	90-80-71	
49	57	131	1.2	68	29	166	0.78	64	18.4	190	0.61	60	10.2	223	0.43	56	80-71	
56	50	132	1.0	67	25	167	0.71	62	16.1	191	0.55	58	8.9	223	0.39	54		
70	40	120	0.81	62	20	149	0.55	57	12.9	169	0.42	54	7.1	197	0.30	49		
80	35	113	0.69	60	17.5	141	0.48	54	11.3	160	0.38	50	6.3	185	0.26	46		
100	28	103	0.52	58	14.0	128	0.37	51	9.0	144	0.29	47	5.0	166	0.20	43		

RI 85

Kg 14

ir	n_1 = 2800 min^{-1}				n_1 = 1400 min^{-1}				n_1 = 900 min^{-1}				n_1 = 500 min^{-1}				RMI	RMI...G
	n_2 min^{-1}	T_{2M} Nm	P kW	RD %	n_2 min^{-1}	T_{2M} Nm	P kW	RD %	n_2 min^{-1}	T_{2M} Nm	P kW	RD %	n_2 min^{-1}	T_{2M} Nm	P kW	RD %	IEC	
7	400	177	8.6	86	200	247	6.1	85	129	297	4.8	84	71	369	3.3	83	112-100 90	—
10	280	205	7.1	85	140	280	4.9	84	90	332	3.8	83	50	407	2.6	81		
15	187	211	5.0	82	93	283	3.4	81	60	333	2.6	79	33	403	1.8	77		
20	140	236	4.3	81	70	310	2.9	79	45	362	2.2	77	25	434	1.5	74		
28	100	210	2.9	75	50	275	2.0	72	32	319	1.6	69	17.9	381	1.1	65		
40	70	242	2.5	72	35	312	1.7	69	23	359	1.3	66	12.5	424	0.90	62	100-90-80	
49	57	225	1.9	70	29	287	1.3	65	18.4	329	1.0	62	10.2	387	0.71	58	90-80	
56	50	223	1.7	70	25	283	1.1	66	16.1	322	0.87	62	8.9	377	0.61	58		
70	40	208	1.3	66	20	261	0.90	61	12.9	297	0.70	57	7.1	346	0.49	53		
80	35	194	1.1	63	17.5	243	0.77	58	11.3	276	0.60	54	6.3	320	0.42	50		
100	28	172	0.85	59	14.0	217	0.60	53	9.0	243	0.46	50	5.0	281	0.33	44		

ATTENZIONE!

Per situazioni con velocità di ingresso particolari attenersi alla tabella pagina A2.

I pesi riportati sono indicativi e possono variare in funzione della versione del riduttore.

N.B. Per i riduttori evidenziati dal doppio bordo nella colonna delle potenze è necessario verificare lo scambio termico del riduttore (come nel par. 1.7-A). Per maggiori informazioni contattare l'ufficio tecnico STM.

WARNING!

If in presence of non standard input speed please attain to the page A2.

Listed weights are for reference only and can vary according to the gearbox version.

NOTE. Please pay attention to the frame around the input power value: for this gearboxes it's important to check the thermal capacity (comp. chapter 1.7-A). For details please contact our technical department.

ACHTUNG!

Mit unstandardisierte Antriebsgeschwindigkeit bitte auf Seite A2.

Die angegebenen Gewichte sind Richtwerte und können je nach Getriebeversion etwas variieren.

HINWEIS. Sind in den Tabellen Nennleistungen eingerahmt, so ist die thermische Leistungsgrenze der Getriebe zu beachten (s. S. 1.7-A).
Für weitere Informationen wenden Sie sich bitte and unser technisches Büro.

1.6 Prestazioni riduttori RI

1.6 RI Gearboxes performances

1.6 Leistungen der RI-Getriebe

RI 110

38 Kg

ir	n_1 = 2800 min^{-1}				n_1 = 1400 min^{-1}				n_1 = 900 min^{-1}				n_1 = 500 min^{-1}				RMI	RMI...G
	n_2 min^{-1}	T_{2M} Nm	P kW	RD %	n_2 min^{-1}	T_{2M} Nm	P kW	RD %	n_2 min^{-1}	T_{2M} Nm	P kW	RD %	n_2 min^{-1}	T_{2M} Nm	P kW	RD %	IEC	
7	400	341	16.6	86	200	478	11.6	86	129	577	9.1	85	71	720	6.4	84	132-112 100	–
10	280	391	13.5	85	140	537	9.3	85	90	640	7.2	84	50	788	5.0	82		
15	187	396	9.3	83	93	535	6.4	82	60	632	5.0	80	33	769	3.4	78		
20	140	465	8.3	82	70	617	5.6	81	45	722	4.3	79	25	869	3.0	76	112-100	
28	100	433	5.9	77	50	570	4.0	75	32	665	3.1	72	17.9	796	2.2	69		
40	70	493	4.9	74	35	638	3.2	72	23	737	2.6	68	12.5	873	1.8	65	112-100 90	
49	57	452	3.8	72	29	581	2.5	69	18.4	667	1.9	66	10.2	786	1.4	62		
56	50	364	2.7	71	25	465	1.8	69	16.1	532	1.4	64	8.9	624	0.97	60		
70	40	381	2.3	68	20	483	1.6	64	12.9	551	1.2	60	7.1	644	0.88	55		
80	35	390	2.2	66	17.5	491	1.5	62	11.3	559	1.1	58	6.3	651	0.80	53		
100	28	355	1.7	62	14.0	444	1.1	57	9.0	503	0.89	53	5.0	583	0.62	49		

RI 130

48 Kg

ir	n_1 = 2800 min^{-1}				n_1 = 1400 min^{-1}				n_1 = 900 min^{-1}				n_1 = 500 min^{-1}				RMI	RMI...G
	n_2 min^{-1}	T_{2M} Nm	P kW	RD %	n_2 min^{-1}	T_{2M} Nm	P kW	RD %	n_2 min^{-1}	T_{2M} Nm	P kW	RD %	n_2 min^{-1}	T_{2M} Nm	P kW	RD %	IEC	
7	400	501	24	88	200	706	16.8	88	129	855	13.2	87	71	1070	9.5	84	132-112 100	–
10	280	574	19.3	87	140	791	13.3	87	90	946	10.5	85	50	1167	7.4	83		
15	187	622	14.5	84	93	840	9.8	84	60	993	7.5	83	33	1210	5.3	80		
20	140	686	12.1	83	70	915	8.1	83	45	1073	6.2	82	25	1296	4.4	77		
28	100	607	8.4	76	50	805	5.5	76	32	941	4.2	75	17.9	1131	3.1	69		
40	70	693	6.9	74	35	903	4.5	73	23	1045	3.5	71	12.5	1243	2.5	65		
49	57	681	5.7	72	29	880	3.8	70	18.4	1014	2.8	69	10.2	1200	2.0	63	112-100	
56	50	636	4.6	72	25	814	3.1	69	16.1	935	2.3	68	8.9	1100	1.7	62		
70	40	639	3.9	69	20	812	2.5	67	12.9	928	2.0	62	7.1	1086	1.4	58		
80	35	616	3.3	68	17.5	778	2.2	64	11.3	886	1.7	60	6.3	1034	1.2	56		
100	28	551	2.5	64	14.0	691	1.7	59	9.0	785	1.3	55	5.0	913	0.94	51		

RI 150

77 Kg

ir	n_1 = 2800 min^{-1}				n_1 = 1400 min^{-1}				n_1 = 900 min^{-1}				n_1 = 500 min^{-1}				RMI	RMI...G
	n_2 min^{-1}	T_{2M} Nm	P kW	RD %	n_2 min^{-1}	T_{2M} Nm	P kW	RD %	n_2 min^{-1}	T_{2M} Nm	P kW	RD %	n_2 min^{-1}	T_{2M} Nm	P kW	RD %	IEC	
7	400	754	36	88	200	1070	25	88	129	1300	20	87	71	1630	14.2	86	160-132 112-100	–
10	280	850	29	87	140	1180	19.9	87	90	1420	15.6	86	50	1755	10.9	84		
15	187	935	22	85	93	1270	14.6	85	60	1500	11.4	83	33	1830	7.9	81		
20	140	1070	18.7	84	70	1430	12.5	84	45	1680	9.7	82	25	2040	6.8	79	132-112 100	
28	100	965	13.1	77	50	1280	8.8	76	32	1500	6.8	74	17.9	1810	4.8	71		
40	70	1070	10.3	76	35	1400	6.8	75	23	1630	5.3	73	12.5	1950	3.8	67		
49	57	1020	8.2	74	29	1320	5.6	71	18.4	1530	4.3	69	10.2	1800	3.0	65		
56	50	1018	7.2	74	25	1306	4.7	73	16.1	1500	3.7	68	8.9	1768	2.6	64		
70	40	927	5.5	70	20	1183	3.7	67	12.9	1355	2.9	63	7.1	1591	2.0	59		
80	35	896	4.8	69	17.5	1136	3.2	66	11.3	1297	2.5	62	6.3	1518	1.7	57		
100	28	818	3.6	66	14.0	1029	2.4	62	9.0	1169	1.9	58	5.0	1361	1.3	54		

ATTENZIONE!

Per situazioni con velocità di ingresso particolari attenersi alla tabella pagina A2.

I pesi riportati sono indicativi e possono variare in funzione della versione del riduttore.

N.B. Per i riduttori evidenziati dal doppio bordo nella colonna delle potenze è necessario verificare lo scambio termico del riduttore (come nel par. 1.7-A). Per maggiori informazioni contattare l'ufficio tecnico STM.

WARNING!

If in presence of non standard input speed please attain to the page A2.

Listed weights are for reference only and can vary according to the gearbox version.

NOTE. Please pay attention to the frame around the input power value: for this gearboxes it's important to check the thermal capacity (comp. chapter 1.7-A). For details please contact our technical department.

ACHTUNG!

Mit unstandardisierte Antriebsgeschwindigkeit bitte auf Seite A2.

Die angegebenen Gewichte sind Richtwerte und können je nach Getriebeversion etwas variieren.

HINWEIS. Sind in den Tabellen Nennleistungen eingerahmt, so ist die thermische Leistungsgrenze der Getriebe zu beachten (s. S. 1.7-A).
Für weitere Informationen wenden Sie sich bitte and unser technisches Büro.

1.6 Prestazioni riduttori RI

1.6 RI Gearboxes performances

1.6 Leistungen der RI-Getriebe

RI 180

Kg 130

ir	n_1 = 2800 min^{-1}				n_1 = 1400 min^{-1}				n_1 = 900 min^{-1}				n_1 = 500 min^{-1}				RMI	RMI...G
	n_2 min^{-1}	T_{2M} Nm	P kW	RD %	n_2 min^{-1}	T_{2M} Nm	P kW	RD %	n_2 min^{-1}	T_{2M} Nm	P kW	RD %	n_2 min^{-1}	T_{2M} Nm	P kW	RD %	IEC	
7	400	1015	48	89	200	1510	36	89	129	1840	28	88	71	2320	20	86	180-160 132	—
10	280	1190	40	88	140	1650	27	88	90	1990	22	87	50	2470	15.2	85		
15	187	1315	30	86	93	1800	20	86	60	2140	15.8	85	33	2620	11.2	82		
20	140	1515	26	84	70	2037	17.8	84	45	2400	13.6	83	25	2910	9.5	80	160-132	
28	100	1400	18.3	80	50	1870	12.4	79	32	2200	9.6	77	17.9	2660	6.8	73		
40	70	1525	14.9	75	35	2000	9.8	75	23	2330	7.5	73	12.5	2790	5.3	69		
49	57	1600	12.9	74	29	2080	8.4	74	18.4	2415	6.5	72	10.2	2870	4.6	66		
56	50	1630	11.5	74	25	2103	7.5	73	16.1	2423	5.7	71	8.9	2864	4.1	66		
70	40	1482	8.6	72	20	1900	5.9	68	12.9	2182	4.5	66	7.1	2570	3.2	61		
80	35	1424	7.6	69	17.5	1816	5.0	67	11.3	2079	3.8	65	6.3	2440	2.7	59	132	
100	28	1281	5.8	65	14.0	1622	3.8	63	9.0	1850	2.9	61	5.0	2163	2.1	54		

RI 215

Kg 260

ir	n_1 = 2800 min^{-1}				n_1 = 1400 min^{-1}				n_1 = 900 min^{-1}				n_1 = 500 min^{-1}				RMI	RMI...G
	n_2 min^{-1}	T_{2M} Nm	P kW	RD %	n_2 min^{-1}	T_{2M} Nm	P kW	RD %	n_2 min^{-1}	T_{2M} Nm	P kW	RD %	n_2 min^{-1}	T_{2M} Nm	P kW	RD %	IEC	
7*	400	1660	77	90	200	2400	56	90	129	2900	44	89	71	3700	32	86	225-200	—
10*	280	2170	71	89	140	3041	50	89	90	3670	39	88	50	4600	28	85		
15*	187	2400	53	88	93	3300	37	88	60	3900	28	87	33	4800	20	83		
19,5	144	2500	43	87	72	3300	29	86	46	3900	22	85	26	4700	16	81	180-160 132	
28*	100	2400	29	86	50	3200	20	85	32	3200	12,8	84	17,9	4500	11	78		
40*	70	2400	22	81	35	3100	14,4	79	23	3600	11,0	77	12,5	4300	7,9	71		
50*	56	2400	18	78	28	3150	12,2	76	18,0	3650	9,3	74	10,0	4300	6,4	70		
57*	49	2284	15	76	25	2970	10,3	74	15,8	3465	8,1	71	8,8	4125	6,0	63		
69*	41	2400	13	76	20	3100	8,9	74	13,0	3600	6,9	71	7,2	4200	5,1	63		
80*	35	2200	12	70	17,5	2800	7,5	68	11,3	3200	5,9	64	6,3	3800	4,4	57		
100*	28	2150	9,0	70	14,0	2700	5,8	68	9,0	3100	4,6	64	5,0	3600	3,3	57		

RI 250

Kg 460

ir	n_1 = 2800 min^{-1}				n_1 = 1400 min^{-1}				n_1 = 900 min^{-1}				n_1 = 500 min^{-1}				RMI	RMI...G
	n_2 min^{-1}	T_{2M} Nm	P kW	RD %	n_2 min^{-1}	T_{2M} Nm	P kW	RD %	n_2 min^{-1}	T_{2M} Nm	P kW	RD %	n_2 min^{-1}	T_{2M} Nm	P kW	RD %	IEC	
7*	400	2200	102	90	200	3200	74	90	129	4000	61	89	71	5000	43	86	225-200	—
11*	255	3050	91	89	127	4270	64	89	82	5150	50	89	45	6400	36	85		
15*	187	3600	79	89	93	5000	55	89	60	6000	43	88	33	7300	30	84		
20*	140	3500	60	86	70	4800	41	86	45	5700	32	85	25	7000	23	80	180-160 132	
29,5*	95	3600	42	85	47	4800	28	84	31	5700	22	83	16,9	6850	15,6	78		
40*	70	3800	35	80	35	5000	23	79	23	5800	17,7	77	12,5	7000	12,9	71		
49*	57	3800	29	78	29	5000	19,4	77	18,4	5800	14,9	75	10,2	7000	10,8	69		
60*	47	3600	23	77	23	4700	15,1	76	15,0	5500	11,7	74	8,3	6500	8,5	67		
70*	40	3400	20	72	20	4400	13,0	71	12,9	5000	9,9	68	7,1	6000	7,4	61		
79*	35	3000	15,9	70	17,7	3900	10,5	69	11,4	4500	8,0	67	6,3	5300	5,9	60		
98*	29	3000	12,8	70	14,3	3900	8,5	69	9,2	4500	6,5	67	5,1	5300	4,7	60		

* A richiesta / On request / Auf Anfrage

ATTENZIONE!

Per situazioni con velocità di ingresso particolari attenersi alla tabella pagina A2.

I pesi riportati sono indicativi e possono variare in funzione della versione del riduttore.

N.B. Per i riduttori evidenziati dal doppio bordo nella colonna delle potenze è necessario verificare lo scambio termico del riduttore (come nel par. 1.7-A). Per maggiori informazioni contattare l'ufficio tecnico STM.

WARNING!

If in presence of non standard input speed please attain to the page A2.

Listed weights are for reference only and can vary according to the gearbox version.

NOTE. Please pay attention to the frame around the input power value: for this gearboxes it's important to check the thermal capacity (comp. chapter 1.7-A). For details please contact our technical department.

ACHTUNG!

Mit unstandardisierte Antriebsgeschwindigkeit bitte auf Seite A2.

Die angegebenen Gewichte sind Richtwerte und können je nach Getriebeversion etwas variieren.

HINWEIS. Sind in den Tabellen Nennleistungen eingerahmt, so ist die thermische Leistungsgrenze der Getriebe zu beachten (s. S. 1.7-A).
Für weitere Informationen wenden Sie sich bitte and unser technisches Büro.

1.6 Prestazioni riduttori CRI — *1.6 CRI gearboxes performances* — 1.6 Leistungen der CRI-Getriebe

CRI 28/28

2.8 Kg

ir	i_1xi_2	n_1 = 1400 min^{-1}				CRMI	CRMI...G
		n_2 min^{-1}	T_{2M} Nm	P kW	RD %	IEC	
140	7x20	10.0	27	0.05	52	63 - 56	—
200	10x20	7.0	27	0.04	49		
280	10x28	5.0	27	0.03	42		
400	20x20	3.5	27	0.02	44		
600	15x40	2.3	27	0.02	35		
980	49x20	1.4	27	0.01	34	56	
1372	49x28	1.0	27	0.01	28		
1960	49x40	0.71	27	0.01	25		
2800	70x40	0.50	27	0.01	21		
4000	100x40	0.35	27	0.01	17		
5600	100x56	0.25	27	0.01	15		
7000	100x70	0.20	20	0.01	13		
8000	100x80	0.18	16	0.01	11		
10000	100x100	0.14	12	0.01	10		

CRI 28/40

3.5 Kg

ir	i_1xi_2	n_1 = 1400 min^{-1}				CRMI	CRMI...G
		n_2 min^{-1}	T_{2M} Nm	P kW	RD %	IEC	
140	7x20	10.0	64	0.13	51	63 - 56	—
200	10x20	7.0	70	0.10	49		
280	10x28	5.0	70	0.08	43		
400	20x20	3.5	70	0.06	43		
600	15x40	2.3	70	0.05	33		
980	49x20	1.4	70	0.03	32	56	
1372	49x28	1.0	70	0.03	29		
1960	49x40	0.71	70	0.02	24		
2800	70x40	0.50	70	0.02	20		
4000	100x40	0.35	70	0.02	16		
5600	100x56	0.25	65	0.01	14		
7000	100x70	0.20	50	0.01	11		
8000	100x80	0.18	45	0.01	10		
10000	100x100	0.14	35	0.01	11		

CRI 40/40

4.2 Kg

ir	i_1xi_2	n_1 = 1400 min^{-1}				CRMI	CRMI...G
		n_2 min^{-1}	T_{2M} Nm	P kW	RD %	IEC	
140	7x20	10.0	64	0.13	52	71-63-56	71-63-56
200	10x20	7.0	70	0.10	50		
280	10x28	5.0	70	0.08	45		
400	20x20	3.5	70	0.06	44		
600	15x40	2.3	70	0.05	34		
980	49x20	1.4	70	0.03	33	63-56	
1372	49x28	1.0	70	0.03	29		
1960	49x40	0.71	70	0.02	24		
2800	70x40	0.50	70	0.02	19		
4000	100x40	0.35	70	0.01	18		
5600	100x56	0.25	65	0.01	15		
7000	100x70	0.20	50	0.01	12		
8000	100x80	0.18	45	0.01	11		
10000	100x100	0.14	35	0.01	12		

CRI 28/50

5.2 Kg

ir	i_1xi_2	n_1 = 1400 min^{-1}				CRMI	CRMI...G
		n_2 min^{-1}	T_{2M} Nm	P kW	RD %	IEC	
140	7x20	10.0	110	0.21	54	63 - 56	—
200	10x20	7.0	110	0.15	52		
280	10x28	5.0	110	0.13	46		
400	20x20	3.5	110	0.09	46		
600	15x40	2.3	110	0.07	38		
980	49x20	1.4	110	0.05	35	56	
1372	49x28	1.0	110	0.04	30		
1960	49x40	0.71	110	0.03	27		
2800	70x40	0.50	110	0.02	24		
4000	100x40	0.35	110	0.02	19		
5600	100x56	0.25	110	0.02	16		
7000	100x70	0.20	110	0.02	15		
8000	100x80	0.18	75	0.01	12		
10000	100x100	0.14	60	0.01	11		

CRI 40/50

5.9 Kg

ir	i_1xi_2	n_1 = 1400 min^{-1}				CRMI	CRMI...G
		n_2 min^{-1}	T_{2M} Nm	P kW	RD %	IEC	
140	7x20	10.0	110	0.21	56	71-63-56	71-63-56
200	10x20	7.0	110	0.15	53		
280	10x28	5.0	110	0.12	47		
400	20x20	3.5	110	0.09	47		
600	15x40	2.3	110	0.07	39		
980	49x20	1.4	110	0.05	36	63 - 56	
1372	49x28	1.0	110	0.04	30		
1960	49x40	0.71	110	0.03	28		
2800	70x40	0.50	110	0.03	23		
4000	100x40	0.35	110	0.02	21		
5600	100x56	0.25	110	0.02	18		
7000	100x70	0.20	110	0.01	16		
8000	100x80	0.18	75	0.01	14		
10000	100x100	0.14	60	0.01	13		

CRI 28/63

7.4 Kg

ir	i_1xi_2	n_1 = 1400 min^{-1}				CRMI	CRMI...G
		n_2 min^{-1}	T_{2M} Nm	P kW	RD %	IEC	
140	7x20	10.0	207	0.34	56	63 - 56	—
200	10x20	7.0	228	0.31	53		
280	10x28	5.0	250	0.29	46		
400	20x20	3.5	192	0.20	46		
600	15x40	2.3	250	0.16	38		
980	49x20	1.4	189	0.11	35	56	
1372	49x28	1.0	223	0.07	30		
1960	49x40	0.71	223	0.06	27		
2800	70x40	0.50	244	0.06	23		
4000	100x40	0.35	188	0.04	19		
5600	100x56	0.25	230	0.04	16		
7000	100x70	0.20	220	0.03	15		
8000	100x80	0.18	200	0.03	14		
10000	100x100	0.14	140	0.02	12		

I pesi riportati sono indicativi e possono variare in funzione della versione del riduttore.

Listed weights are for reference only and can vary according to the gearbox version.

Die angegebenen Gewichte sind Richtwerte und können sich je nach Getriebeversion ändern.

1.6 Prestazioni riduttori CRI — *1.6 CRI gearboxes performances* — 1.6 Leistungen der CRI-Getriebe

CRI 40/63

Kg 8.1

ir	$i_1 x i_2$	n_1 = 1400 min^{-1}				CRMI	CRMI...G
		n_2 min^{-1}	T_{2M} Nm	P kW	RD %	IEC	
140	7x20	10.0	238	0.44	57	71 - 63 - 56	71 - 63 56
200	10x20	7.0	250	0.34	54		
280	10x28	5.0	250	0.28	47		
400	20x20	3.5	250	0.20	47		
600	15x40	2.3	250	0.16	39		
980	49x20	1.4	250	0.10	36	63 - 56	
1372	49x28	1.0	250	0.09	30		
1960	49x40	0.71	250	0.07	27		
2800	70x40	0.50	250	0.06	22		
4000	100x40	0.35	250	0.04	21		
5600	100x56	0.25	250	0.04	18		
7000	100x70	0.20	220	0.03	16		
8000	100x80	0.18	200	0.02	15		
10000	100x100	0.14	140	0.02	13		

CRI 28/70

Kg 14.4

ir	$i_1 x i_2$	n_1 = 1400 min^{-1}				CRMI	CRMI...G
		n_2 min^{-1}	T_{2M} Nm	P kW	RD %	IEC	
140	7x20	10.0	207	0.34	55	63 - 56	—
200	10x20	7.0	228	0.30	53		
280	10x28	5.0	271	0.28	45		
400	20x20	3.5	192	0.20	46		
600	15x40	2.3	316	0.20	38		
980	49x20	1.4	189	0.11	35	56	
1372	49x28	1.0	223	0.08	29		
1960	49x40	0.71	288	0.08	27		
2800	70x40	0.50	244	0.04	25		
4000	100x40	0.35	188	0.04	18		
5600	100x56	0.25	230	0.05	16		
7000	100x70	0.20	245	0.03	14		
8000	100x80	0.18	256	0.04	13		
10000	100x100	0.14	190	0.02	12		

CRI 40/70

Kg 16.1

ir	$i_1 x i_2$	n_1 = 1400 min^{-1}				CRMI	CRMI...G
		n_2 min^{-1}	T_{2M} Nm	P kW	RD %	IEC	
140	7x20	10.0	266	0.49	56	71 - 63 - 56	71 - 63 56
200	10x20	7.0	290	0.39	54		
280	10x28	5.0	290	0.33	46		
400	20x20	3.5	320	0.25	47		
600	15x40	2.3	316	0.20	39		
980	49x20	1.4	320	0.14	35	63 - 56	
1372	49x28	1.0	320	0.12	30		
1960	49x40	0.71	320	0.09	27		
2800	70x40	0.50	320	0.08	22		
4000	100x40	0.35	320	0.06	20		
5600	100x56	0.25	300	0.04	18		
7000	100x70	0.20	290	0.04	15		
8000	100x80	0.18	270	0.04	14		
10000	100x100	0.14	190	0.02	13		

CRI 50/70

Kg 16.8

ir	$i_1 x i_2$	n_1 = 1400 min^{-1}				CRMI	CRMI...G
		n_2 min^{-1}	T_{2M} Nm	P kW	RD %	IEC	
140	7x20	10.0	266	0.49	57	80 - 71	80 - 71 63
200	10x20	7.0	290	0.39	55		
280	10x28	5.0	290	0.32	47		
400	20x20	3.5	320	0.24	49		
600	15x40	2.3	316	0.19	41		
980	49x20	1.4	320	0.12	39	71 - 63	
1372	49x28	1.0	320	0.10	33		
1960	49x40	0.71	320	0.08	30		
2800	70x40	0.50	320	0.06	26		
4000	100x40	0.35	320	0.05	22		
5600	100x56	0.25	300	0.04	19		
7000	100x70	0.20	290	0.04	16		
8000	100x80	0.18	270	0.03	15		
10000	100x100	0.14	190	0.02	14		

CRI 63/70

Kg 19.0

ir	$i_1 x i_2$	n_1 = 1400 min^{-1}				CRMI	CRMI...G
		n_2 min^{-1}	T_{2M} Nm	P kW	RD %	IEC	
140	7x20	10.0	266	0.49	57	90 - 80 - 71	90 - 80 71
200	10x20	7.0	290	0.38	56		
280	10x28	5.0	290	0.32	47		
400	20x20	3.5	320	0.25	47		
600	15x40	2.3	316	0.19	41		
980	49x20	1.4	320	0.12	40	80 - 71	
1372	49x28	1.0	320	0.10	33		
1960	49x40	0.71	320	0.08	31		
2800	70x40	0.50	320	0.06	27		
4000	100x40	0.35	320	0.05	23		
5600	100x56	0.25	300	0.04	20		
7000	100x70	0.20	290	0.04	17		
8000	100x80	0.18	270	0.03	16		
10000	100x100	0.14	190	0.02	15		

CRI 40/85

Kg 20

ir	$i_1 x i_2$	n_1 = 1400 min^{-1}				CRMI	CRMI...G
		n_2 min^{-1}	T_{2M} Nm	P kW	RD %	IEC	
140	7x20	10.0	500	0.89	59	71 - 63 - 56	71 - 63 56
200	10x20	7.0	500	0.66	56		
280	10x28	5.0	500	0.57	46		
400	20x20	3.5	500	0.37	49		
600	15x40	2.3	500	0.31	40		
980	49x20	1.4	500	0.20	37	63 - 56	
1372	49x28	1.0	500	0.18	29		
1960	49x40	0.71	500	0.14	27		
2800	70x40	0.50	500	0.12	22		
4000	100x40	0.35	500	0.09	21		
5600	100x56	0.25	500	0.07	19		
7000	100x70	0.20	460	0.06	17		
8000	100x80	0.18	460	0.05	16		
10000	100x100	0.14	350	0.04	14		

I pesi riportati sono indicativi e possono variare in funzione della versione del riduttore.

Listed weights are for reference only and can vary according to the gearbox version.

Die angegebenen Gewichte sind Richtwerte und können sich je nach Getriebeversion ändern.

1.6 Prestazioni riduttori CRI — *1.6 CRI gearboxes performances* — 1.6 Leistungen der CRI-Getriebe

CRI 50/85

Kg 22

ir	i_1xi_2	n_1 = 1400 min^{-1} n_2 min^{-1}	T_{2M} Nm	P kW	RD %	CRMI IEC	CRMI...G IEC
140	7x20	10.0	500	0.88	60	80 - 71	80 - 71 63
200	10x20	7.0	500	0.65	57		
280	10x28	5.0	500	0.56	47		
400	20x20	3.5	500	0.36	51		
600	15x40	2.3	500	0.29	42		
980	49x20	1.4	500	0.18	41	71 - 63	
1372	49x28	1.0	500	0.17	32		
1960	49x40	0.71	500	0.12	30		
2800	70x40	0.50	500	0.10	26		
4000	100x40	0.35	500	0.08	22		
5600	100x56	0.25	500	0.06	21		
7000	100x70	0.20	460	0.05	18		
8000	100x80	0.18	460	0.05	17		
10000	100x100	0.14	350	0.04	14		

CRI 63/85

Kg 24

ir	i_1xi_2	n_1 = 1400 min^{-1} n_2 min^{-1}	T_{2M} Nm	P kW	RD %	CRMI IEC	CRMI...G IEC
140	7x20	10.0	500	0.88	60	90 - 80 - 71	90 - 80 71
200	10x20	7.0	500	0.64	57		
280	10x28	5.0	500	0.55	47		
400	20x20	3.5	500	0.35	52		
600	15x40	2.3	500	0.29	42		
980	49x20	1.4	500	0.18	42	71 - 80	
1372	49x28	1.0	500	0.16	33		
1960	49x40	0.71	500	0.12	31		
2800	70x40	0.50	500	0.10	27		
4000	100x40	0.35	500	0.08	23		
5600	100x56	0.25	500	0.06	22		
7000	100x70	0.20	460	0.05	19		
8000	100x80	0.18	460	0.05	18		
10000	100x100	0.14	350	0.03	15		

CRI 70/85

Kg 31

ir	i_1xi_2	n_1 = 1400 min^{-1} n_2 min^{-1}	T_{2M} Nm	P kW	RD %	CRMI IEC	CRMI...G IEC
140	7x20	10.0	500	0.87	60	100-90-80	—
200	10x20	7.0	500	0.64	57		
280	10x28	5.0	500	0.55	47		
400	20x20	3.5	500	0.36	52	90 - 80	
600	15x40	2.3	500	0.29	42	100-90-80	
980	49x20	1.4	500	0.18	42	80 - 71	
1372	49x28	1.0	500	0.16	33		
1960	49x40	0.71	500	0.12	31		
2800	70x40	0.50	500	0.10	27		
4000	100x40	0.35	500	0.08	23		
5600	100x56	0.25	500	0.06	22		
7000	100x70	0.20	460	0.05	19		
8000	100x80	0.18	460	0.05	18		
10000	100x100	0.14	350	0.03	15		

CRI 50/110

Kg 42

ir	i_1xi_2	n_1 = 1400 min^{-1} n_2 min^{-1}	T_{2M} Nm	P kW	RD %	CRMI IEC	CRMI...G IEC
140	7x20	10.0	1000	1.7	60	80 - 71	80 - 71 - 63
200	10x20	7.0	1000	1.3	58		
280	10x28	5.0	1000	1.0	50		
400	20x20	3.5	1000	0.71	52		
600	15x40	2.3	1000	0.56	44		
980	49x20	1.4	1000	0.37	41	71 - 63	
1372	49x28	1.0	1000	0.31	34		
1960	49x40	0.71	1000	0.24	32		
2800	70x40	0.50	1000	0.19	27		
4000	100x40	0.35	1000	0.16	23		
5600	100x56	0.25	1000	0.12	21		
7000	100x70	0.20	960	0.11	19		
8000	100x80	0.18	860	0.09	18		
10000	100x100	0.14	700	0.06	16		

CRI 63/110

Kg 44

ir	i_1xi_2	n_1 = 1400 min^{-1} n_2 min^{-1}	T_{2M} Nm	P kW	RD %	CRMI IEC	CRMI...G IEC
140	7x20	10.0	1000	1.7	60	90 - 80 - 71	90 - 80 71
200	10x20	7.0	1000	1.2	59		
280	10x28	5.0	1000	1.0	51		
400	20x20	3.5	1000	0.70	52		
600	15x40	2.3	1000	0.56	44		
980	49x20	1.4	1000	0.36	42	80 - 71	
1372	49x28	1.0	1000	0.31	35		
1960	49x40	0.71	1000	0.23	32		
2800	70x40	0.50	1000	0.18	28		
4000	100x40	0.35	1000	0.15	24		
5600	100x56	0.25	1000	0.12	22		
7000	100x70	0.20	960	0.10	20		
8000	100x80	0.18	860	0.08	19		
10000	100x100	0.14	700	0.06	17		

CRI 70/110

Kg 51

ir	i_1xi_2	n_1 = 1400 min^{-1} n_2 min^{-1}	T_{2M} Nm	P kW	RD %	CRMI IEC	CRMI...G IEC
140	7x20	10.0	1000	1.7	61	100-90-80	—
200	10x20	7.0	1000	1.2	59		
280	10x28	5.0	1000	1.0	51		
400	20x20	3.5	1000	0.70	52	90 - 80	
600	15x40	2.3	1000	0.56	44	100-90-80	
980	49x20	1.4	1000	0.36	42	80 - 71	
1372	49x28	1.0	1000	0.31	35		
1960	49x40	0.71	1000	0.23	32		
2800	70x40	0.50	1000	0.19	28		
4000	100x40	0.35	1000	0.15	24		
5600	100x56	0.25	1000	0.12	22		
7000	100x70	0.20	960	0.10	20		
8000	100x80	0.18	860	0.08	19		
10000	100x100	0.14	700	0.06	17		

I pesi riportati sono indicativi e possono variare in funzione della versione del riduttore.

Listed weights are for reference only and can vary according to the gearbox version.

Die angegebenen Gewichte sind Richtwerte und können sich je nach Getriebeversion ändern.

1.6 Prestazioni riduttori CRI

1.6 CRI gearboxes performances

1.6 Leistungen der CRI-Getriebe

CRI 85/110

Kg 56

ir	i_1xi_2	n_1 = 1400 min^{-1}				CRMI	CRMI...G
		n_2 min^{-1}	T_{2M} Nm	P kW	RD %	IEC	
140	7x20	10.0	1000	1.7	61	112-100 90	—
200	10x20	7.0	1000	1.2	60		
280	10x28	5.0	1000	1.0	51		
400	20x20	3.5	1000	0.68	54		
600	15x40	2.3	1000	0.55	45		
980	49x20	1.4	1000	0.35	42	90 - 80	
1372	49x28	1.0	1000	0.30	35		
1960	49x40	0.71	1000	0.23	33		
2800	70x40	0.50	1000	0.18	30		
4000	100x40	0.35	1000	0.14	25		
5600	100x56	0.25	1000	0.11	23		
7000	100x70	0.20	960	0.10	21		
8000	100x80	0.18	860	0.08	20		
10000	100x100	0.14	700	0.06	17		

CRI 63/130

Kg 54

ir	i_1xi_2	n_1 = 1400 min^{-1}				CRMI	CRMI...G
		n_2 min^{-1}	T_{2M} Nm	P kW	RD %	IEC	
140	7x20	10.0	1660	2.8	61	90 - 80 - 71	90 - 80 71
200	10x20	7.0	1800	2.2	59		
280	10x28	5.0	1600	1.7	51		
400	20x20	3.5	1800	1.3	51		
600	15x40	2.3	1800	1.0	43		
980	49x20	1.4	1800	0.64	42	80 - 71	
1372	49x28	1.0	1800	0.56	35		
1960	49x40	0.71	1800	0.42	32		
2800	70x40	0.50	1800	0.34	28		
4000	100x40	0.35	1800	0.28	24		
5600	100x56	0.25	1700	0.19	23		
7000	100x70	0.20	1700	0.17	20		
8000	100x80	0.18	1600	0.15	20		
10000	100x100	0.14	1250	0.11	17		

CRI 70/130

Kg 61

ir	i_1xi_2	n_1 = 1400 min^{-1}				CRMI	CRMI...G
		n_2 min^{-1}	T_{2M} Nm	P kW	RD %	IEC	
140	7x20	10.0	1660	2.8	62	100-90-80	—
200	10x20	7.0	1800	2.2	59		
280	10x28	5.0	1600	1.7	51		
400	20x20	3.5	1800	1.2	53	90 - 80	
600	15x40	2.3	1800	1.0	43	100-90-80	
980	49x20	1.4	1800	0.64	42	80 - 71	
1372	49x28	1.0	1800	0.56	35		
1960	49x40	0.71	1800	0.42	32		
2800	70x40	0.50	1800	0.34	27		
4000	100x40	0.35	1800	0.28	24		
5600	100x56	0.25	1700	0.19	23		
7000	100x70	0.20	1700	0.17	20		
8000	100x80	0.18	1600	0.15	20		
10000	100x100	0.14	1250	0.11	17		

CRI 85/130

Kg 66

ir	i_1xi_2	n_1 = 1400 min^{-1}				CRMI	CRMI...G
		n_2 min^{-1}	T_{2M} Nm	P kW	RD %	IEC	
140	7x20	10.0	1660	2.8	62	112-100 90	—
200	10x20	7.0	1800	2.2	60		
280	10x28	5.0	1600	1.6	51		
400	20x20	3.5	1800	1.2	55		
600	15x40	2.3	1800	1.0	44		
980	49x20	1.4	1800	0.63	43	90 - 80	
1372	49x28	1.0	1800	0.55	35		
1960	49x40	0.71	1800	0.41	33		
2800	70x40	0.50	1800	0.32	29		
4000	100x40	0.35	1800	0.26	25		
5600	100x56	0.25	1700	0.19	24		
7000	100x70	0.20	1700	0.17	21		
8000	100x80	0.18	1600	0.14	21		
10000	100x100	0.14	1250	0.10	18		

CRI 85/150

Kg 95

ir	i_1xi_2	n_1 = 1400 min^{-1}				CRMI	CRMI...G
		n_2 min^{-1}	T_{2M} Nm	P kW	RD %	IEC	
140	7x20	10.0	2620	4.3	64	112-100 90	—
200	10x20	7.0	2850	3.4	61		
280	10x28	5.0	2510	2.5	53		
400	20x20	3.5	2900	1.9	55		
600	15x40	2.3	2880	1.6	45		
980	49x20	1.4	2900	0.98	44	90 - 80	
1372	49x28	1.0	2900	0.84	37		
1960	49x40	0.71	2900	0.64	34		
2800	70x40	0.50	2900	0.50	31		
4000	100x40	0.35	2900	0.42	25		
5600	100x56	0.25	2900	0.30	25		
7000	100x70	0.20	2600	0.25	22		
8000	100x80	0.18	2600	0.23	21		
10000	100x100	0.14	1950	0.15	19		

CRI 110/150

Kg 115

ir	i_1xi_2	n_1 = 1400 min^{-1}				CRMI	CRMI..G
		n_2 min^{-1}	T_{2M} Nm	P kW	RD %	IEC	
140	7x20	10.0	2620	4.3	65	132-112-100	—
200	10x20	7.0	2850	3.4	62		
280	10x28	5.0	2510	2.5	54		
400	20x20	3.5	2900	1.9	57	112-100	
600	15x40	2.3	2880	1.5	46	132-112-100	
980	49x20	1.4	2900	0.92	47	112-100-90	
1372	49x28	1.0	2900	0.79	39		
1960	49x40	0.71	2900	0.60	36		
2800	70x40	0.50	2900	0.47	32		
4000	100x40	0.35	2900	0.39	27		
5600	100x56	0.25	2900	0.28	27		
7000	100x70	0.20	2600	0.23	23		
8000	100x80	0.18	2600	0.21	22		
10000	100x100	0.14	1950	0.14	21		

I pesi riportati sono indicativi e possono variare in funzione della versione del riduttore.

Listed weights are for reference only and can vary according to the gearbox version.

Die angegebenen Gewichte sind Richtwerte und können sich je nach Getriebeversion ändern.

1.6 Prestazioni riduttori CRI — *1.6 CRI gearboxes performances* — 1.6 Leistungen der CRI-Getriebe

CRI 85/180

Kg 148

ir	i_1xi_2	n_1 = 1400 min^{-1} n_2 min^{-1}	T_{2M} Nm	P kW	RD %	CRMI IEC	CRMI...G IEC
140	7x20	10.0	3750	6.1	65	112-100 90	—
200	10x20	7.0	4095	4.8	62		
280	10x28	5.0	3700	3.5	55		
400	20x20	3.5	4400	3.0	56		
600	15x40	2.3	4160	2.2	46		
980	49x20	1.4	3850	1.6	44	90 - 80	
1372	49x28	1.0	4600	1.3	38		
1960	49x40	0.71	4600	1.0	34		
2800	70x40	0.50	4600	0.79	31		
4000	100x40	0.35	4250	0.62	26		
5600	100x56	0.25	4600	0.48	25		
7000	100x70	0.20	4600	0.44	22		
8000	100x80	0.18	4200	0.37	21		
10000	100x100	0.14	3300	0.26	19		

CRI 110/180

Kg 168

ir	i_1xi_2	n_1 = 1400 min^{-1} n_2 min^{-1}	T_{2M} Nm	P kW	RD %	CRMI IEC	CRMI...G IEC
140	7x20	10.0	3750	6.0	65	132-112-100	—
200	10x20	7.0	4095	4.8	63		
280	10x28	5.0	3700	3.5	55		
400	20x20	3.5	4600	2.9	58	112-100	
600	15x40	2.3	4160	2.2	47	132-112-100	
980	49x20	1.4	4600	1.5	47	112-100-90	
1372	49x28	1.0	4600	1.2	40		
1960	49x40	0.71	4600	0.96	36		
2800	70x40	0.50	4600	0.75	32		
4000	100x40	0.35	4600	0.60	28		
5600	100x56	0.25	4600	0.45	27		
7000	100x70	0.20	4600	0.41	23		
8000	100x80	0.18	4200	0.35	22		
10000	100x100	0.14	3300	0.24	20		

CRI 130/180

Kg 178

ir	i_1xi_2	n_1 = 1400 min^{-1} n_2 min^{-1}	T_{2M} Nm	P kW	RD %	CRMI IEC	CRMI...G IEC
140	7x20	10.0	3750	5.9	67	132-112-100	—
200	10x20	7.0	4095	4.7	64		
280	10x28	5.0	3700	3.4	57		
400	20x20	3.5	4600	2.9	59		
600	15x40	2.3	4160	2.1	48		
980	49x20	1.4	4600	1.4	48	112-100	
1372	49x28	1.0	4600	1.2	41		
1960	49x40	0.71	4600	0.95	36		
2800	70x40	0.50	4600	0.72	34		
4000	100x40	0.35	4600	0.58	29		
5600	100x56	0.25	4600	0.43	28		
7000	100x70	0.20	4600	0.40	24		
8000	100x80	0.18	4200	0.33	23		
10000	100x100	0.14	3300	0.23	21		

CRI 110/215

Kg 298

ir	i_1xi_2	n_1 = 1400 min^{-1} n_2 min^{-1}	T_{2M} Nm	P kW	RD %	CRMI IEC	CRMI...G IEC
136,5*	7X19,5	10,3	6115	9,8	67	132-112-100	—
195*	10X19,5	7,2	6624	7,7	65		
293*	15X19,5	4,8	7203	5,9	61		
390*	20X19,5	3,6	7200	4,5	60	112-100	
600*	15X40	2,3	6346	3,0	51	132-112-100	
956*	49X19,5	1,5	7200	2,3	48	112-100-90	
1372*	49X28	1,0	7200	1,7	47		
1960*	49X40	0,71	7200	1,4	39		
2800*	70X40	0,50	7200	1,1	35		
4000*	100X40	0,35	7200	0,86	31		
5700*	100X57	0,25	7200	0,69	27		
6900*	100X69	0,20	7200	0,57	27		
8000*	100X80	0,18	6800	0,58	22		
10000*	100X100	0,14	5700	0,37	23		

CRI 130/250

Kg 508

ir	i_1xi_2	n_1 = 1400 min^{-1} n_2 min^{-1}	T_{2M} Nm	P kW	RD %	CRMI IEC	CRMI...G IEC
140*	7X20	10,0	9008	14,5	65	132-112-100	—
200*	10X20	7,0	9773	12,0	60		
300*	15X20	4,7	10500	8,4	61		
400*	20X20	3,5	10500	7,2	53		
600*	15X40	2,3	10322	5,5	46		
980*	49X20	1,4	10500	3,3	48	112-100	
1446*	49X29,5	1,0	10500	2,6	41		
1960*	49X40	0,71	10500	2,0	39		
2800*	70X40	0,50	10500	1,4	38		
4000*	100X40	0,35	10500	1,2	31		
6000*	100X60	0,23	10500	1,1	23		
7000*	100X70	0,20	10500	0,88	25		
7900*	100X79	0,18	9000	0,67	25		
9800*	100X98	0,14	9000	0,59	23		

* A richiesta / On request / Auf Anfrage

I pesi riportati sono indicativi e possono variare in funzione della versione del riduttore.

Listed weights are for reference only and can vary according to the gearbox version.

Die angegebenen Gewichte sind Richtwerte und können sich je nach Getriebeversion ändern.

1.6 Prestazioni riduttori CR — *1.6 CR gearboxes performances* — 1.6 Leistungen der CR-Getriebe

CR 40

Kg 3.5

ir	i_1xi_2	n_1 = 2800 min^{-1}				n_1 = 1400 min^{-1}				n_1 = 900 min^{-1}				n_1 = 500 min^{-1}				IEC
		n_2 min^{-1}	T_{2M} Nm	P kW	RD %	n_2 min^{-1}	T_{2M} Nm	P kW	RD %	n_2 min^{-1}	T_{2M} Nm	P kW	RD %	n_2 min^{-1}	T_{2M} Nm	P kW	RD %	
44.3	2.9x15	63	49	0.43	75	32	59	0.27	73	20	65	0.19	71	11.3	70	0.12	69	
50.5	3.4X15	55	49	0.38	75	28	59	0.23	73	17.8	65	0.17	71	9.9	70	0.11	68	
58.2	3.9X15	48	52	0.35	75	24	65	0.23	71	15.5	70	0.16	69	8.6	70	0.09	68	
68.0	4.5X15	41	56	0.32	74	21	65	0.20	71	13.2	70	0.14	69	7.4	70	0.08	66	
82.7	3.0X28	34	50	0.28	64	16.9	59	0.17	61	10.9	65	0.13	59	6.0	70	0.08	56	
108.7	3.9X28	26	52	0.22	63	12.9	65	0.15	59	8.3	70	0.11	56	4.6	70	0.06	55	63
126.9	4.5X28	22	56	0.21	62	11.0	65	0.13	59	7.1	70	0.09	56	3.9	70	0.06	52	
165.1	3.4X49	17.0	43	0.14	53	8.5	50	0.09	49	5.5	56	0.07	45	3.0	65	0.05	43	56
222.1	4.5X49	12.6	48	0.12	51	6.3	56	0.08	47	4.1	61	0.06	44	2.3	70	0.04	41	
295.2	3.0X100	9.5	30	0.07	41	4.7	31	0.04	38	3.0	33	0.03	36	1.7	34	0.02	34	
336.8	3.4X100	8.3	30	0.06	41	4.2	31	0.04	38	2.7	33	0.03	35	1.5	35	0.02	33	
388.2	3.9X100	7.2	30	0.06	41	3.6	33	0.03	36	2.3	34	0.02	34	1.3	35	0.01	33	
453.0	4.5X100	6.2	31	0.05	40	3.1	33	0.03	36	2.0	34	0.02	33	1.1	35	0.01	31	

CR 50

Kg 5

ir	i_1xi_2	n_1 = 2800 min^{-1}				n_1 = 1400 min^{-1}				n_1 = 900 min^{-1}				n_1 = 500 min^{-1}				IEC
		n_2 min^{-1}	T_{2M} Nm	P kW	RD %	n_2 min^{-1}	T_{2M} Nm	P kW	RD %	n_2 min^{-1}	T_{2M} Nm	P kW	RD %	n_2 min^{-1}	T_{2M} Nm	P kW	RD %	
48.3	3.2x15	58	89	0.68	79	29	106	0.42	77	18.6	108	0.28	75	10.4	110	0.16	73	
52.1	3.5X15	54	94	0.67	79	27	108	0.40	76	17.3	110	0.27	74	9.6	110	0.15	73	
61.0	4.1X15	46	94	0.57	79	23	108	0.34	76	14.8	110	0.23	74	8.2	110	0.13	73	
73.3	2.6X28	38	92	0.55	67	19.1	109	0.34	64	12.3	110	0.23	62	6.8	110	0.13	59	
90.2	3.2X28	31	92	0.45	67	15.5	109	0.28	64	10.0	110	0.19	59	5.5	110	0.11	58	
97.2	3.5X28	29	97	0.44	66	14.4	110	0.27	62	9.3	110	0.18	59	5.1	110	0.10	58	71
113.9	4.1X28	25	97	0.38	66	12.3	110	0.23	62	7.9	110	0.15	59	4.4	110	0.09	58	
170.1	3.5X49	16.5	86	0.26	58	8.2	103	0.17	53	5.3	110	0.12	50	2.9	110	0.07	49	63
199.3	4.1X49	14.0	86	0.22	58	7.0	103	0.14	53	4.5	110	0.10	50	2.5	110	0.06	49	56
261.9	2.6X100	10.7	59	0.15	44	5.3	60	0.08	40	3.4	60	0.06	38	1.9	60	0.03	35	
289.5	5.9x49	9.7	96	0.21	47	4.8	110	0.11	50	3.1	110	0.07	49	1.7	110	0.04	47	
347.0	3.5X100	8.1	60	0.12	43	4.0	60	0.07	38	2.6	60	0.05	35	1.4	60	0.03	34	
406.7	4.1X100	6.9	60	0.10	43	3.4	60	0.06	38	2.2	60	0.04	35	1.2	60	0.02	34	
590.9	5.9x100	4.7	60	0.07	40	2.4	60	0.04	35	1.5	60	0.03	34	0.8	60	0.02	32	

CR 70

Kg 16

ir	i_1xi_2	n_1 = 2800 min^{-1}				n_1 = 1400 min^{-1}				n_1 = 900 min^{-1}				n_1 = 500 min^{-1}				IEC
		n_2 min^{-1}	T_{2M} Nm	P kW	RD %	n_2 min^{-1}	T_{2M} Nm	P kW	RD %	n_2 min^{-1}	T_{2M} Nm	P kW	RD %	n_2 min^{-1}	T_{2M} Nm	P kW	RD %	
44.3	2.95x15	63	170	1.4	78	32	205	0.89	76	20	234	0.67	74	11.3	263	0.43	72	
50.8	3.4X15	55	170	1.3	78	28	205	0.78	76	17.7	234	0.59	73	9.8	290	0.43	70	
59.1	3.9X15	47	181	1.2	78	24	234	0.78	74	15.2	263	0.58	72	8.5	290	0.37	70	
69.6	4.6X15	40	193	1.1	77	20	234	0.67	74	12.9	263	0.49	72	7.2	312	0.34	69	
82.6	2.95X28	34	170	0.89	68	16.9	202	0.56	64	10.9	228	0.42	62	6.1	254	0.27	59	
110.3	3.9X28	25	180	0.71	67	12.7	228	0.49	62	8.2	254	0.37	59	4.5	290	0.24	57	90
130.0	4.6X28	22	191	0.66	66	10.8	228	0.42	62	6.9	254	0.31	59	3.8	298	0.22	55	80
166.1	3.4X49	16.9	190	0.56	60	8.4	223	0.35	56	5.4	250	0.28	51	3.0	290	0.19	48	
227.5	4.6X49	12.3	212	0.48	57	6.2	250	0.30	53	4.0	276	0.23	50	2.2	320	0.16	46	71
295.0	2.95x100	9.5	144	0.30	47	4.7	166	0.19	43	3.1	175	0.14	40	1.7	183	0.09	37	63
302.9	6.2X49	9.2	223	0.42	51	4.6	276	0.27	49	3.0	290	0.19	47	1.7	320	0.12	46	
338.9	3.4X100	8.3	144	0.27	47	4.1	166	0.17	43	2.7	175	0.13	38	1.5	188	0.08	36	
393.8	3.9X100	7.1	151	0.24	46	3.6	175	0.16	40	2.3	183	0.12	37	1.3	188	0.07	36	
464.3	4.6X100	6.3	159	0.23	45	3.1	175	0.14	40	2.0	183	0.10	37	1.1	190	0.07	34	
618.2	6.2x100	4.5	166	0.18	43	2.3	183	0.12	36	1.5	188	0.08	35	0.8	190	0.05	34	

I pesi riportati sono indicativi e possono variare in funzione della versione del

Listed weights are for reference only and can vary according to the gearbox version.

Die angegebenen Gewichte sind Richtwerte und können je nach Getriebe-

1.6 Prestazioni riduttori CR — *16 CR gearboxes performances* — 1.6 Leistungen der CR-Getriebe

CR 85

Kg 36

ir	i_1xi_2	n_1 = 2800 min^{-1}				n_1 = 1400 min^{-1}				n_1 = 900 min^{-1}				n_1 = 500 min^{-1}				IEC
		n_2 min^{-1}	T_{2M} Nm	P kW	RD %	n_2 min^{-1}	T_{2M} Nm	P kW	RD %	n_2 min^{-1}	T_{2M} Nm	P kW	RD %	n_2 min^{-1}	T_{2M} Nm	P kW	RD %	
43.0	2.9x15	65	333	2.9	79	33	403	1.8	77	21	452	1.3	75	11.6	500	0.83	73	
51.3	3.4X15	55	333	2.4	79	27	403	1.5	77	17.5	500	1.3	73	9.7	500	0.72	71	
59.1	3.9X15	47	354	2.2	79	24	452	1.5	75	15.2	500	1.1	73	8.5	500	0.62	71	
69.0	4.6X15	41	379	2.1	78	20	452	1.3	75	13.0	500	0.94	73	7.2	500	0.55	69	
80.2	2.9X28	35	319	1.7	69	17.5	381	1.1	65	11.2	431	0.82	62	6.2	480	0.53	59	90
110.4	3.9X28	25	338	1.3	68	12.7	431	0.92	62	8.2	480	0.69	59	4.5	500	0.42	57	80
128.8	4.6X28	22	360	1.2	67	10.9	431	0.79	62	7.0	480	0.60	59	3.9	500	0.37	55	
167.6	3.4X49	16.7	329	0.93	62	8.4	387	0.58	58	5.4	480	0.52	52	3.0	500	0.31	50	71
225.4	4.6X49	12.4	347	0.69	60	6.2	434	0.51	55	4.0	480	0.39	52	2.2	500	0.24	48	63
286.4	2.9X100	9.8	243	0.50	50	4.9	281	0.33	44	3.1	304	0.24	42	1.7	327	0.15	39	
342.1	3.4X100	8.2	243	0.42	50	4.1	281	0.27	44	2.6	327	0.23	39	1.5	337	0.14	37	
394.1	3.9X100	7.1	255	0.40	48	3.6	304	0.27	42	2.3	327	0.20	39	1.3	337	0.12	37	
460.0	4.6X100	6.1	268	0.37	46	3.0	304	0.23	42	2.0	327	0.17	39	1.1	350	0.11	35	

CR 110

Kg 50

ir	i_1xi_2	n_1 = 2800 min^{-1}				n_1 = 1400 min^{-1}				n_1 = 900 min^{-1}				n_1 = 500 min^{-1}				IEC
		n_2 min^{-1}	T_{2M} Nm	P kW	RD %	n_2 min^{-1}	T_{2M} Nm	P kW	RD %	n_2 min^{-1}	T_{2M} Nm	P kW	RD %	n_2 min^{-1}	T_{2M} Nm	P kW	RD %	
43.0	2.9x15	65	632	5.4	80	33	769	3.4	78	21	880	2.5	76	11.6	990	1.6	74	
51.3	3.4X15	55	632	4.5	80	27	769	2.8	78	17.5	990	2.5	74	9.7	1000	1.4	72	
59.1	3.9X15	47	674	4.2	80	24	880	2.9	76	15.2	990	2.1	74	8.5	1000	1.2	72	
69.0	4.6X15	41	722	3.9	79	20	880	2.5	76	13.0	990	1.8	74	7.2	1000	1.1	70	
80.2	2.9X28	35	665	3.4	72	17.5	796	2.1	69	11.2	898	1.6	66	6.2	1000	1.0	63	112
110.4	3.9X28	25	705	2.6	72	12.7	898	1.8	66	8.2	1000	1.4	63	4.5	1000	0.78	61	100
128.8	4.6X28	22	751	2.4	71	10.9	898	1.5	66	7.0	1000	1.2	63	3.9	1000	0.70	58	
167.6	3.4X49	16.7	667	1.8	66	8.4	786	1.1	62	5.4	976	0.98	56	3.0	1000	0.59	53	90
225.4	4.6X49	12.4	745	1.5	64	6.2	881	0.97	59	4.0	976	0.73	56	2.2	1000	0.46	51	80
286.4	2.9X100	9.8	503	0.97	53	4.9	583	0.61	49	3.1	617	0.42	48	1.7	650	0.28	42	
342.1	3.4X100	8.2	503	0.81	53	4.1	583	0.51	49	2.6	650	0.43	42	1.5	670	0.26	40	
394.1	3.9X100	7.1	528	0.76	52	3.6	617	0.48	48	2.3	650	0.37	42	1.3	670	0.22	40	
460.0	4.6X100	6.1	556	0.70	51	3.0	617	0.42	47	2.0	650	0.32	42	1.1	700	0.21	38	

CR 130

Kg 67

ir	i_1xi_2	n_1 = 2800 min^{-1}				n_1 = 1400 min^{-1}				n_1 = 900 min^{-1}				n_1 = 500 min^{-1}				IEC
		n_2 min^{-1}	T_{2M} Nm	P kW	RD %	n_2 min^{-1}	T_{2M} Nm	P kW	RD %	n_2 min^{-1}	T_{2M} Nm	P kW	RD %	n_2 min^{-1}	T_{2M} Nm	P kW	RD %	
40,4	5,77x7	69	1110	10,1	80	35	1372	6,4	78	22	1540	4,7	77	12,4	1800	3,1	76	
50,4	7,2x7	56	1194	8,7	79	28	1456	5,5	78	17,9	1624	4,0	77	9,9	1800	2,5	75	180
57,7	5,77x10	49	1196	7,7	79	24	1455	4,8	77	15,6	1621	3,5	76	8,7	1800	2,2	74	
72,0	7,2x10	39	1279	6,7	78	19,4	1538	4,1	76	12,5	1704	3,0	75	6,9	1800	1,8	73	160
85,3	4,26x20	33	1200	5,6	74	16,4	1445	3,5	72	10,6	1602	2,5	70	5,9	1810	1,6	68	
115,4	5,77x20	24	1307	4,5	73	12,1	1553	2,8	71	7,8	1709	2,0	69	4,3	1800	1,2	67	132
144,0	7,2x20	19,4	1386	3,9	72	9,7	1631	2,4	70	6,3	1788	1,7	68	3,5	1800	1,0	66	112
161,5	5,77x28	17,3	1158	3,2	65	8,7	1387	2,0	62	5,6	1534	1,5	59	3,1	1800	1,0	57	
201,6	7,2x28	13,9	1231	2,8	64	6,9	1461	1,8	61	4,5	1607	1,3	58	2,5	1800	0,84	56	100
230,8	5,77x40	12,1	1262	2,6	62	6,1	1493	1,6	58	3,9	1641	1,2	56	2,2	1800	0,77	53	90
288,0	7,2x40	9,7	1336	2,2	61	4,9	1567	1,4	57	3,1	1715	1,0	55	1,7	1800	0,63	52	
323,1	5,77x56	8,7	1100	1,7	59	4,3	1299	1,1	56	2,8	1426	0,78	53	1,5	1700	0,55	50	80
403,2	7,2x56	6,9	1163	1,5	58	3,5	1363	0,91	54	2,2	1490	0,67	52	1,2	1700	0,45	49	71
504,0	7,2x70	5,6	1161	1,3	54	2,8	1347	0,78	50	1,8	1465	0,57	48	1,0	1700	0,39	45	
576,0	7,2x80	4,9	1105	1,1	52	2,4	1281	0,67	49	1,6	1393	0,49	47	0,87	1600	0,33	44	63
720,0	7,2x100	3,9	967	0,83	48	1,9	1113	0,51	44	1,3	1206	0,38	42	0,69	1250	0,23	39	

I pesi riportati sono indicativi e possono variare in funzione della versione del

Listed weights are for reference only and can vary according to the gearbox version.

Die angegebenen Gewichte sind Richtwerte und können je nach Getriebe-

1.6 Prestazioni riduttori CR — *16 CR gearboxes performances* — 1.6 Leistungen der CR-Getriebe

CR 150

Kg 98

ir	i_1xi_2	n_1 = 2800 min^{-1}				n_1 = 1400 min^{-1}				n_1 = 900 min^{-1}				n_1 = 500 min^{-1}				IEC
		n_2	T_{2M}	P	RD	n_2	T_{2M}	P	RD	n_2	T_{2M}	P	RD	n_2	T_{2M}	P	RD	
		min^{-1}	Nm	kW	%	min^{-1}	Nm	kW	%	min^{-1}	Nm	kW	%	min^{-1}	Nm	kW	%	
40,4	5,77x7	69	1689	15,2	81	35	2091	9,6	79	22	2348	7,0	78	12,4	2900	4,9	76	
50,4	7,2x7	56	1818	13,2	80	28	2220	8,2	78	17,9	2476	6,0	77	9,9	2900	4,0	76	
57,7	5,77x10	49	1807	11,6	79	24	2212	7,3	77	15,6	2471	5,3	76	8,7	2900	3,5	74	180
72,0	7,2x10	39	1936	10,0	79	19,4	2342	6,2	77	12,5	2600	4,5	75	6,9	2900	2,9	74	160
85,3	4,26x20	33	1888	8,6	76	16,4	2287	5,4	73	10,6	2541	3,9	72	5,9	2879	2,5	69	132
115,4	5,77x20	24	2062	7,0	75	12,1	2461	4,3	72	7,8	2715	3,1	70	4,3	2900	1,9	68	112
144,0	7,2x20	19,4	2190	6,0	74	9,7	2589	3,7	71	6,3	2843	2,7	70	3,5	2900	1,6	68	100
161,5	5,77x28	17,3	1848	5,0	67	8,7	2214	3,2	63	5,6	2448	2,3	61	3,1	2900	1,6	59	90
201,6	7,2x28	13,9	1965	4,4	66	6,9	2332	2,7	62	4,5	2565	2,0	60	2,5	2900	1,3	58	80
230,8	5,77x40	12,1	1980	4,0	64	6,1	2353	2,5	60	3,9	2591	1,8	58	2,2	2900	1,2	55	71
288,0	7,2x40	9,7	2099	3,4	62	4,9	2472	2,1	59	3,1	2710	1,6	57	1,7	2900	0,98	54	63
323,1	5,77x56	8,7	1797	2,7	61	4,3	2116	1,7	58	2,8	2320	1,2	55	1,5	2591	0,80	53	
403,2	7,2x56	6,9	1899	2,3	60	3,5	2218	1,4	56	2,2	2422	1,0	54	1,2	2900	0,73	51	
504,0	7,2x70	5,6	1705	1,8	55	2,8	1986	1,1	51	1,8	2165	0,83	49	1,0	2600	0,59	46	
576,0	7,2x80	4,9	1620	1,5	53	2,4	1877	0,96	50	1,6	2041	0,70	47	0,87	2259	0,46	44	
720,0	7,2x100	3,9	1451	1,2	50	1,9	1679	0,74	46	1,3	1823	0,54	44	0,69	1950	0,34	41	

CR 180

Kg 163

ir	i_1xi_2	n_1 = 2800 min^{-1}				n_1 = 1400 min^{-1}				n_1 = 900 min^{-1}				n_1 = 500 min^{-1}				IEC
		n_2	T_{2M}	P	RD	n_2	T_{2M}	P	RD	n_2	T_{2M}	P	RD	n_2	T_{2M}	P	RD	
		min^{-1}	Nm	kW	%	min^{-1}	Nm	kW	%	min^{-1}	Nm	kW	%	min^{-1}	Nm	kW	%	
37,3	5,33x7	75	2349	22,7	81	38	2958	14,6	80	24	3347	10,8	78	13,4	3864	7,0	77	
52,5	7,5x7	53	2648	18,4	81	27	3258	11,6	79	17,1	3647	8,4	78	9,5	4164	5,5	76	
62,0	6,2x10	45	2607	15,4	80	23	3187	9,7	78	14,5	3557	7,1	77	8,1	4049	4,6	75	
75,0	7,5x10	37	2766	13,6	79	18,7	3346	8,5	77	12,0	3716	6,1	76	6,7	4208	3,9	74	225
85,0	4,25x20	33	2707	12,2	76	16,5	3312	7,7	74	10,6	3698	5,7	72	5,9	4211	3,7	70	200
106,7	5,33x20	26	2905	10,6	75	13,1	3510	6,6	73	8,4	3896	4,8	71	4,7	4409	3,1	69	180
124,0	6,2x20	23	3036	9,6	75	11,3	3642	6,0	72	7,3	4027	4,3	71	4,0	4541	2,8	69	160
150,0	7,5x20	18,7	3203	8,4	74	9,3	3808	5,2	72	6,0	4194	3,8	70	3,3	4600	2,4	68	132
173,6	6,2x28	16,1	2771	6,8	68	8,1	3318	4,3	65	5,2	3666	3,2	63	2,9	4130	2,1	60	112
213,3	5,33x40	13,1	2782	5,9	65	6,6	3330	3,7	61	4,2	3679	2,8	59	2,3	4143	1,8	56	100
248,0	6,2x40	11,3	2901	5,4	64	5,6	3448	3,4	60	3,6	3798	2,5	58	2,0	4262	1,6	55	90
261,3	5,33x49	10,7	2857	5,1	63	5,4	3399	3,2	59	3,4	3745	2,4	57	1,9	4204	1,6	54	80
303,8	6,2x49	9,2	2975	4,6	62	4,6	3517	2,9	58	3,0	3863	2,1	56	1,6	4322	1,4	53	71
367,5	7,5x49	7,6	3124	4,1	61	3,8	3666	2,6	57	2,4	4011	1,9	55	1,4	4471	1,2	52	63
420,0	7,5x56	6,7	3113	3,6	61	3,3	3641	2,2	57	2,1	3977	1,6	55	1,2	4424	1,1	52	
434,0	6,2x70	6,5	2663	3,1	57	3,2	3131	2,0	53	2,1	3429	1,5	51	1,2	3826	1,0	48	
525,0	7,5x70	5,3	2792	2,8	56	2,7	3260	1,7	52	1,7	3558	1,3	50	1,0	3955	0,85	47	
600,0	7,5x80	4,7	2629	2,4	54	2,3	3044	1,5	51	1,5	3308	1,1	48	0,83	3660	0,71	45	
750,0	7,5x100	3,7	2333	1,8	50	1,9	2704	1,1	46	1,2	2941	0,85	44	0,67	3300	0,57	40	

I pesi riportati sono indicativi e possono variare in funzione della versione del

N.B. Per i riduttori evidenziati dal doppio bordo nella colonna delle potenze è necessario verificare lo scambio termico del riduttore (come nel par. 1.7-A). Per maggiori informazioni contattare l'ufficio tecnico STM.

Listed weights are for reference only and can vary according to the gearbox version.

NOTE. Please pay attention to the frame around the input power value: for this gearboxes it's important to check the thermal capacity (comp. chapter 1.7-A). For details please contact our technical department.

Die angegebenen Gewichte sind Richtwerte und können je nach Getriebe-

HINWEIS. Sind in den Tabellen Nennleistungen eingerahmt, so ist die thermische Leistungsgrenze der Getriebe zu beachten (s. S. 1.7-A).
Für weitere Informationen wenden Sie sich bitte and unser technisches Büro.

1.6 Prestazioni riduttori CR — *16 CR gearboxes performances* — 1.6 Leistungen der CR-Getriebe

CR 215

303

ir	i_1xi_2	n_1 = 2800 min^{-1}				n_1 = 1400 min^{-1}				n_1 = 900 min^{-1}				n_1 = 500 min^{-1}				IEC
		n_2 min^{-1}	T_{2M} Nm	P kW	RD %	n_2 min^{-1}	T_{2M} Nm	P kW	RD %	n_2 min^{-1}	T_{2M} Nm	P kW	RD %	n_2 min^{-1}	T_{2M} Nm	P kW	RD %	
42,5*	4,25x10	66	4223	36	81	33	5282	23	79	21,2	5957	16,9	78	11,8	6855	11,1	76	
53,3*	5,33x10	53	4570	31	81	26	5629	19,7	79	16,9	6304	14,4	77	9,4	7202	9,3	76	
62,0*	6,2x10	45	4800	28	80	23	5859	17,7	78	14,5	6534	12,9	77	8,1	7200	8,1	75	225
75,0*	7,5x10	37	5090	25	80	18,7	6150	15,5	78	12,0	6825	11,2	76	6,7	7200	6,7	75	200
80,0*	5,33x15	35	4794	22	79	17,5	5828	14,0	76	11,3	6487	10,2	75	6,3	7200	6,5	73	
112,5*	7,5x15	25	5303	17,8	78	12,4	6336	11,0	75	8,0	7200	8,2	74	4,4	7200	4,7	71	180
120,9*	6,2x19,5	23	4953	15,7	76	11,6	5942	9,8	74	7,4	6573	7,1	72	4,1	7200	4,5	70	160
146,3*	7,5x19,5	19,1	5225	13,9	76	9,6	6214	8,5	73	6,2	6844	6,2	71	3,4	7200	3,7	69	
173,6*	6,2x28	16,1	4649	12,4	63	8,1	5584	7,4	63	5,2	6181	5,3	63	2,9	6974	3,3	63	132
213,3*	5,33x40	13,1	4279	8,7	68	6,6	5108	5,5	64	4,2	5637	4,0	62	2,3	6341	2,6	59	112
248,0*	6,2x40	11,3	4459	7,9	67	5,6	5289	4,9	63	3,6	5818	3,6	61	2,0	6521	2,4	58	100
266,7*	5,33x50	10,5	4286	7,3	65	5,3	5108	4,6	61	3,4	5631	3,4	58	1,9	6328	2,2	55	
300,0*	7,5x40	9,3	4687	6,9	66	4,7	5516	4,3	62	3,0	6045	3,2	60	1,7	6749	2,1	57	90
375,0*	7,5x50	7,5	4690	5,8	63	3,7	5512	3,7	59	2,4	6035	2,7	57	1,3	6732	1,8	53	80
427,8*	6,2x69	6,5	4337	4,9	61	3,3	5087	3,1	57	2,1	5565	2,3	54	1,2	6201	1,5	51	71
517,5*	7,5x69	5,4	4543	4,3	60	2,7	5293	2,7	56	1,7	5771	2,0	53	1,0	6407	1,3	50	
600,0*	7,5x80	4,7	4136	3,8	53	2,3	4814	2,4	49	1,5	5246	1,8	47	0,83	5820	1,2	43	63
750,0*	7,5x100	3,7	3909	2,9	53	1,9	4523	1,8	49	1,2	4914	1,3	47	0,67	5434	0,87	44	

CR 250

527

ir	i_1xi_2	n_1 = 2800 min^{-1}				n_1 = 1400 min^{-1}				n_1 = 900 min^{-1}				n_1 = 500 min^{-1}				IEC
		n_2 min^{-1}	T_{2M} Nm	P kW	RD %	n_2 min^{-1}	T_{2M} Nm	P kW	RD %	n_2 min^{-1}	T_{2M} Nm	P kW	RD %	n_2 min^{-1}	T_{2M} Nm	P kW	RD %	
38,5*	3,5x11	73	5508	51,3	82	36	7052	33	80	23	8036	25	79	13	9346	16,3	78	280
52,5*	3,5x15	53	6328	43,7	81	27	7925	28	79	17,1	8942	21	78	9,5	10296	13,3	77	250
61,9*	4,13x15	45	6707	39,5	81	23	8303	25	79	14,5	9321	18,2	78	8,1	10500	11,6	77	225
77,5*	5,17x15	36	7225	34,2	80	18,1	8822	21	78	11,6	9839	15,4	77	6,5	10500	9,3	76	
90,0*	6x15	31	7570	31	80	15,6	9166	19,1	78	10	10184	13,8	77	5,6	10500	8,1	76	200
108,8*	7,25x15	26	8005	27,2	79	12,9	9602	16,7	78	8,3	10500	11,9	77	4,6	10500	6,7	75	180
120,0*	6x20	23	7190	23,1	76	11,7	8677	14,3	74	7,5	9625	10,4	73	4,2	10500	6,4	71	160
145,0*	7,25x20	19,3	7596	20,3	76	9,7	9083	12,5	74	6,2	10031	9	72	3,4	10500	5,4	71	
177,0*	6x29,5	15,8	7068	15,9	74	7,9	8463	9,8	72	5,1	9353	7,1	70	2,8	10500	4,6	68	132
206,7*	5,17x40	13,5	6876	14,4	68	6,8	8234	9	65	4,4	9099	6,6	63	2,4	10251	4,3	61	112
240,0*	6x40	11,7	7169	13	67	5,8	8527	8,1	64	3,8	9392	5,9	63	2,1	10500	3,8	60	100
290,0*	7,25x40	9,5	7169	11	65	4,8	8527	6,9	62	3,1	9392	5	60	1,7	10500	3,2	58	
360,0*	6x60	7,9	7539	9,7	64	3,9	8897	6	61	2,5	9763	4,4	59	1,4	10500	2,7	57	90
435,0*	7,25x60	6,4	6954	7,5	63	3,2	8156	4,6	59	2,1	8922	3,4	57	1,1	10500	2,3	55	80
507,5*	7,25x70	5,5	5210	5,3	57	2,8	6175	3,4	53	1,8	6789	2,5	51	1,0	7607	1,7	47	71
572,8*	7,25x79	4,9	5682	5,3	55	2,4	6646	3,3	51	1,6	7260	2,5	49	0,87	8078	1,6	45	
710,5*	7,25x98	3,9	5682	4,2	55	2,0	6646	2,7	51	1,3	7260	2,1	47	0,70	8078	1,3	45	63

* A richiesta / On request / Auf Anfrage

I pesi riportati sono indicativi e possono variare in funzione della versione del

N.B. Per i riduttori evidenziati dal doppio bordo nella colonna delle potenze è necessario verificare lo scambio termico del riduttore (come nel par. 1.7-A). Per maggiori informazioni contattare l'ufficio tecnico STM.

Listed weights are for reference only and can vary according to the gearbox version.

NOTE. Please pay attention to the frame around the input power value: for this gearboxes it's important to check the thermal capacity (comp. chapter 1.7-A). For details please contact our technical department.

Die angegebenen Gewichte sind Richtwerte und können je nach Getriebe-

HINWEIS. Sind in den Tabellen Nennleistungen eingerahmt, so ist die thermische Leistungsgrenze der Getriebe zu beachten (s. S. 1.7-A).
Für weitere Informationen wenden Sie sich bitte and unser technisches Büro.

1.6 Prestazioni Limitatore

Nelle tabelle seguenti sono riportate le coppie di slittamento M_{2S} in funzione del numero dei giri del dado, o della ghiera di regolazione ottenibili con la disposizione standard delle molle (par. 1.6.1).
Tali valori prescindono dalle prestazioni delle dentature.
Valori più elevati di M_{2S} si possono otte- nere, a richiesta, con una diversa disposi- zione delle molle.
I
valori di taratura si riferiscono ad una condizione statica(durante lo slittamento la coppia trasmessa decade considerevol- mente) ed hanno un significato indicativo in quanto ottenuti per via teorica.
E' opportuno verificare periodicamente la coppia di taratura soprattutto durante la prima fase di funzionamento.

16 Performances limiter

In the following tables the slipping torques M_{2S} are listed according to number of turns of nut or ring nut obtainable with a standard arrangement of the springs (chapter 1.6.1).

Such data prescind from tothing perfor- mances.

M_{2S} higher values can eventually be obtained with a different arrangement of the springs.

Calibration values refer to a static condition (during slippage torque reports a con- siderable decrease) and are approximate being calculated on a theoric basis. It is important therefore to check the calibration torque periodically especially during first phase of running.

1.6 Leistungen der Rutschkupplung

In der folgenden Tabelle sind die Rutsch- momente M_{2S} dargestellt, wie sie je nach Stellung der Sechskant- oder Nutmutter mit der Standardanordnung der Tellerfedern erreicht werden (siehe kapitel 1.6.1).
Diese Werte lassen die maximal übertrag- bare Leistung der Getriebe in Abhängigkeit von der Untersetzung jedoch außer acht.
Mit einer anderen Anordnung der Teller- federn können auch größere Rutschmo- mente M_{2S} erreicht werden.
Die angegebenen Werte sind statische Momente (das Rutschmoment nimmt wäh- rend des Schlupfvorganges ab) und sind nur als Näherungswerte zu betrachten.
Das eingestellte Rutschmoment sollte in der Einlaufphase in periodischen Abständen überprüft und gegebenenfalls korrigiert werden.

—
Senza Taratura maggiorata
Without Heavy calibration
Ohne Erhöhtes Ansprechmoment

LP LC

LF

RI RMI	ir	N° GIRI DEL DADO DI REGOLAZIONE *N° OF TURNS OF ADJUSTEMENT RING NUT* DREHUNGEN DER EINSTELLMUTTER										
		1/2	2/3	1	1 1/3	1 2/3	2	2 1/3	2 2/3	3	3 1/3	3 2/3
		M_{2S} (Nm)										
28	tutti i rapporti *all ratios* alle Untersetzungen	4	5.5	7.5	10	13						
40		12	16	24	31	38	46					
50		16	20	29	39	47	55	63				
63		21	27	41	55	65	79	89	101	112	124	
70		21	27	41	55	65	79	89	101	112	124	
85	7-10-15-28	60	79	113.5	148	175	210	236	265	298	323	345
	20-40-49	66	87	125	163	192.5	231	260	292	328	356	380
	56 - 100	72	95	136	178	210	253	284	319	358	388	415
110	7-10-15-28	106	141	207	271	334	392	454	516	572	630	
	20-40-49	114	152	224	293	361	423	490	557	618	680	
	56 - 100	131	174	257	336	414	486	640	709	781		
130	tutti / *all* / alle	240	310	450	590	720	850	950				
150	tutti / *all* / alle	550	730	1070	1390	1700	1990	2200				

RI RMI	ir	N° GIRI DEL DADO DI REGOLAZIONE *N° OF TURNS OF ADJUSTEMENT RING NUT* DREHUNGEN DER EINSTELLMUTTE												
		1/4	1/2	2/3	1	1 1/3	1 2/3	2	2 1/3	2 2/3	3	3 1/3	3 2/3	4
		M_{2S} (Nm)												
28	tutti i rapporti *all ratios* alle Untersetzungen													
40		15	28	36	51	64	75	86	97					
50		21	40	52	74	93	110	126	141	154	167			
63		27	51	66	93	120	140	160	175	195	210			
70		24	45	58	81	100	115	125	135	145	151	155	160	
85	7-10-15-28	50	85	115	160	200	240	280	310	340	370	395	420	
	20-40-49	60	95	120	170	220	265	300	340	370	400	430	460	
	56 - 100	80	100	130	190	240	290	330	370	400	440	470	500	
110	7-10-15-28	140	260	340	490	630	750	860	960	1060	1150	1230	1310	1390
	20-40-49	150	285	370	530	670	800	930	1040	1140	1230	1330	1410	1500
	56 - 100	170	330	430	600	770	930	1060	1190	1300	1415	1520	1620	1720
130	tutti / *all* / alle	244	476	625	910	1180	1438	1686	1920	2160	2390			
150	tutti / *all* / alle	550	860	1130	1660	2170	2660	3140	3600	4050	4500	4930	5370	

TM
Taratura maggiorata
Heavy calibration
Erhöhtes Ansprechmoment

LP LC

LF

RI RMI	CRI CRMI	ir	CR CB	ir	N° GIRI DEL DADO DI REGOLAZIONE *N° OF TURNS OF ADJUSTEMENT RING NUT* DREHUNGEN DER EINSTELLMUTTER						
					1/2	2/3	1	1 1/3	1 2/3	2	2 1/3
					M_{2S} (Nm)						
28	28	tutti /*all* / alle	—		12.5	17	24				
40	40		40	tutti/*all*/alle	40	53	77	91			
50	50		50		50	65	93	128			
63	63		—		96	125	178	231	288		
70	70		70	tutti/*all*/alle	96	125	178	231	288		
85	85	7-10-15-28	85	43.0 - 128.8	146	185	263	350	414	471	542
		20-40-49		167.6 - 225.4	161	204	289	385	456	518	596
		56 - 100		286.4 - 460.0	176	223	316	420	497	566	651
110	110	7-10-15-28	110	43.0 - 128.8	261	342	501	653	805	945	
		20-40-49		167.6 - 225.4	282	369	541	705	869	1021	
		56 - 100		286.4 - 460.0	323	424	621	810	998	1172	
130	130	tutti / *all* / alle	130	tutti/*all*/alle	470	620	910	1180	1450	1700	1900
150	150	tutti / *all* / alle	150	tutti/*all*/alle	830	110	1600	2050	2500	3000	3350

RI RMI	CRI CRMI	ir	CR CB	ir	N° GIRI DEL DADO DI REGOLAZIONE *N° OF TURNS OF ADJUSTEMENT RING NUT* DREHUNGEN DER EINSTELLMUTTER											
					1/4	1/2	2/3	1	1 1/3	1 2/3	2	2 1/3	2 2/3	3	3 1/3	3 2/3	4
					M_{2S} (Nm)												
28	28	tutti /*all* / alle	—														
40	40		40	tutti/*all*/alle	15	28	36	51	64	75	86	97					
50	50		50		21	40	52	74	93	110	126	141	154	167			
63	63		—		51	100	130	190	245	295	345	385	440	480			
70	70		70	tutti/*all*/alle	38	74	96	135	175	210	240	270	300	320	350		
85	85	7-10-15-28	85	43.0 - 128.8	100	125	160	230	300	360	410	460	510	560	600	640	680
		20-40-49		167.6 - 225.4	110	135	180	255	330	390	450	510	560	610	650	700	750
		56 - 100		286.4 - 460.0	120	150	195	280	350	425	490	550	610	665	715	765	815
110	110	7-10-15-28	110	43.0 - 128.8	190	380	500	740	930	1150	1350	1500	1700	1850	2020	2180	—
		20-40-49		167.6 - 225.4	200	400	540	780	1000	1230	1430	1620	1800	2000	2170	2360	—
		56 - 100		286.4 - 460.0	220	450	600	900	1150	1380	1620	1840	2070	2300	2500	2700	—
130	130	tutti / *all* / alle	130	tutti/*all*/alle	244	476	625	910	1180	1438	1686	1920	2160	2390			
150	150	tutti / *all* / alle	150	tutti/*all*/alle	550	860	1130	1660	2170	2660	3140	3600	4050	4500	4930	5370	

ATTENZIONE !

Quando è richiesto il minimo errore di taratura è opportuno verificare in pratica, staticamente, che la frizione slitti effettiva- mente al valore desiderato è comunque consigliabile testare la coppia trasmissibile direttamente sulla macchina utilizzatrice.

ATTENTION !

When minimum calibration error is required it is always advisable to actually verify, statically, that clutch slips at the required value. We suggest, however, to test the torque directly on to the machine.

ACHTUNG !

Um Abweichungen zu vermeiden, müssen die eingestellten Momente im eingebauten Zustand kontrolliert und eventuell korrigiert werden.

1.6 Prestazioni Limitatore

1.6.1 Disposizione delle molle

La disposizione standard delle molle garantisce una buona sensibilità di regolazione e consente di trasmettere la massima coppia nominale del riduttore.

16 Performances limiter

1.6.1 Springs arrangement

Standard arrangement of springs guarantees an acceptable setting and enables the gearbox to transmit the maximum nominal torque

1.6 Leistungen der Rutschkupplung

1.6.1 Anordnung der Tellerfedern

Die Standardanordnung der Tellerfedern erlaubt eine feinfühlige Einstellung des Rutschmomentes bis zum maximalen Nennmoment des Getriebes.

	LP LC				LF			
	RI- RMI		CRI - CRMI	CR - CB	RI- RMI	RI - RMI	CRI - CRMI	CR - CB
	—	TM			—	TM		
28	5 molle/*springs* 20/10.2/1.1	6 molle/*springs* 20/10.2/1.1			—			
40	5 molle/*springs* 23/12.2/1.5	6 molle/*springs* 23/12.2/1.5			2 molle/*springs* 63/31/2.5			
50	5 molle/*springs* 31.5/16.3/1.75	6 molle/*springs* 31.5/16.3/1.75			2 molle/*springs* 80/41/3			
63	7 molle/*springs* 31.5/16.3/2	6 molle/*springs* 31.5/16.3/2		—	2 molle/*springs* 80/41/3	2 molle/*springs* 80/41/4		—
70	7 molle/*springs* 34/16.3/2	6 molle/*springs* 34/16.3/2			2 molle/*springs* 90/46/2.5	2 molle/*springs* 90/46/3.5		
85	10 molle/*springs* 40/18.3/2	9 molle/*springs* 40/18.3/2			2 molle/*springs* 100/51/3.5	2 molle/*springs* 100/51/4		
110	10 molle/*springs* 45/22.4/2.5	9 molle/*springs* 45/22.4/2.5			2 molle/*springs* 125/61/5	2 molle/*springs* 125/61/6		
130	3 molle/*springs* 60/30.5/3.5	6 molle/*springs* 60/30.5/3.5		—	2 molle/*springs* 125/75.5/6			
150	6 molle/*springs* 60/30.5/3.5	9 molle/springs 60/30.5/3.5		—	2 molle/*springs* 150/81/8			

2	
3	
5	
6	
7	
9	
10	

IN PARALLELO
max. coppia
min. sensibilita'
PARALLEL
max. torque
min. sensitivity
PARALLEL
max. Moment
min. Empfindlichkeit

IN SERIE
min. coppia
max. sensibilita'
SERIES
min. torque
max. sensitivity
SERIE
min. Moment
max. Empfindlichkeit

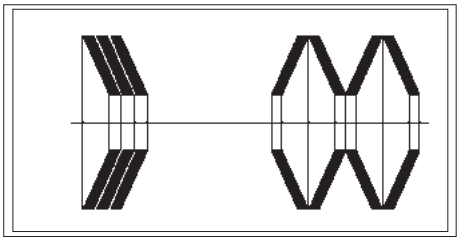

Per problemi specifici è opportuno consultarci, ma a livello indicativo si può affermare che accoppiando più molle con lo stesso verso (in parallelo) si incrementa la coppia massima di slittamento raggiungibile; viceversa alternandone il posizionamento in serie si aumenta la sensibilità di taratura.

Should the user require any specific information, we suggest to contact our technical department. On a general basis, how- ever, if the springs are arranged in the same direction, a higher maximum torque of slippage can be reached; on the contrary by alternating their arrangement the calibration sensitivity is increased.

Das Rutschmoment ist umso größer, je mehr Tellerfedern parallel angeordnet sind (progressive Federkennlinie). Wird ein niedrigeres Moment oder eine erhöhte Justiergenauigkeit gewünscht, so können die Federn auch gegensinnig angeordnet werden (degressive Federkennlinie).
Sollten spezifische Fragen bestehen, so empfehlen wir, unser technisches Büro zu Rate zu ziehen.

1.7 - Motoriduttori

n_2 min^{-1}	ir	T2 Nm	FS'		0.09 kW	Ptn kW
546	5	1.4	20	R40	T56A2	1.1
390	7	1.8	6	R28	T56A2	0.6
273	10	2.5	5.1	R28	T56A2	0.5
191	7	3.6	4.1	R28	T56B4	0.6
182	15	3.7	3.8	R28	T56A2	0.5
137	20	4.8	6.1	R40	T56A2	0.6
137	20	4.7	2.5	R28	T56A2	0.4
134	10	5.1	3.4	R28	T56B4	0.5
123	7	5.5	3.3	R28	T63B6	0.6
98	28	6.3	5.4	R40	T56A2	0.5
98	28	6.1	2.5	R28	T56A2	0.3
89	15	7.4	5.7	R40	T56B4	0.7
89	15	7.2	2.5	R28	T56B4	0.5
86	10	7.9	6.2	R40	T63B6	0.8
86	10	7.7	2.6	R28	T63B6	0.5
68	40	8.2	3.9	R40	T56A2	0.4
68	40	8.1	1.6	R28	T56A2	0.3
67	20	9.4	4	R40	T56B4	0.6
67	20	9.2	1.6	R28	T56B4	0.4
62	44	10.4	4.7	CB40	T56A2	0.7
57	15	11.2	4.4	R40	T63B6	0.7
57	15	11	1.8	R28	T63B6	0.5
56	49	9.6	3.1	R40	T56A2	0.4
56	49	9.4	1.3	R28	T56A2	0.3
55	50	11.8	4.2	CB40	T56A2	0.7
49	56	10.6	2.6	R40	T56A2	0.4
49	56	10.4	1.2	R28	T56A2	0.2
48	28	12	3.6	R40	T56B4	0.5
48	28	11.5	1.7	R28	T56B4	0.3
47	58	13.7	3.8	CB40	T56A2	0.7
45	61	15.2	6.2	CB50	T56A2	1.2
43	20	14.8	5.8	R50	T63B6	0.9
43	20	14	3.1	R40	T63B6	0.6
43	20	13.8	1.3	R28	T63B6	0.4
40	68	15.8	3.5	CB40	T56A2	0.7
39	70	11.7	2	R40	T56A2	0.3
39	70	12.1	0.9	R28	T56A2	0.2
37	73	15.4	6	CB50	T56A2	0.8
34	80	12.6	1.7	R40	T56A2	0.3
34	80	12.7	0.8	R28	T56A2	0.2
34	40	15.4	2.6	R40	T56B4	0.4
34	40	15.2	1.1	R28	T56B4	0.3
33	83	16.7	3	CB40	T56A2	0.5
31	28	18.7	4.9	R50	T63B6	0.7
31	28	17.9	2.8	R40	T63B6	0.5
31	28	17	1.2	R28	T63B6	0.3
30	44	20.6	2.9	CB40	T56B4	0.7
30	90	19	4.8	CB50	T56A2	0.8
28	97	20.2	4.8	CB50	T56A2	0.8
28	48	23.7	4.5	CB50	T56B4	1.1
27	49	17.9	2.1	R40	T56B4	0.4
27	49	17.5	0.9	R28	T56B4	0.3
27	100	16	1.4	R40	T56A2	0.3
27	100	14.7	0.6	R28	T56A2	0.2
27	50	23.4	2.5	CB40	T56B4	0.7
26	52	25.4	4.3	CB50	T56B4	1.1
25	109	21.6	2.4	CB40	T56A2	0.5
24	114	23.7	4.1	CB50	T56A2	0.8
24	56	19.4	1.9	R40	T56B4	0.4
24	56	19.3	0.8	R28	T56B4	0.2
23	58	26.5	2.5	CB40	T56B4	0.7
22	61	29.7	3.6	CB50	T56B4	1.1
22	40	25.2	3.7	R50	T63B6	0.7
22	127	24.8	2.3	CB40	T56A2	0.5
22	40	22.4	2	R40	T63B6	0.4
22	40	22.5	0.8	R28	T63B6	0.3
19.7	68	31	2.1	CB40	T56B4	0.7
19.6	44	31.3	2.1	CB40	T63B6	0.7
19.1	70	21.2	1.3	R40	T56B4	0.3
18.4	73	30	3.6	CB50	T56B4	0.7
17.9	48	36	3	CB50	T63B6	1.0
17.6	49	28.9	2.8	R50	T63B6	0.6
17.6	49	26	1.7	R40	T63B6	0.4
17.2	50	35.5	1.8	CB40	T63B6	0.6
16.9	51	37.2	6.3	CB70	T63B6	1.5
16.8	80	22.5	1.2	R40	T56B4	0.3
16.6	165	27.4	1.6	CB40	T56A2	0.4
16.5	52	38.5	2.9	CB50	T63B6	1.0
16.1	83	32.6	1.8	CB40	T56B4	0.5
16.1	170	31.1	2.8	CB50	T56A2	0.7

1.7 - *Gearmotors*

n_2 min^{-1}	ir	T2 Nm	FS'		0.09 kW	Ptn kW
15.4	56	31.3	2.5	R50	T63B6	0.6
15.4	56	28.6	1.4	R40	T63B6	0.3
14.9	90	36.9	3	CB50	T56B4	0.7
14.8	58	39.9	1.8	CB40	T63B6	0.6
14.6	59	42.4	6.2	CB70	T63B6	1.5
14.1	61	45.2	2.4	CB50	T63B6	1.0
13.8	97	38.5	2.9	CB50	T56B4	0.7
13.7	199	36.3	2.4	CB50	T56A2	0.6
13.4	100	29	1	R40	T56B4	0.3
12.7	68	47	1.5	CB40	T63B6	0.6
12.3	222	35.7	1.3	CB40	T56A2	0.4
12.3	70	50.4	5.2	CB70	T63B6	1.5
12.3	70	36.4	2	R50	T63B6	0.5
12.3	109	41.2	1.6	CB40	T56B4	0.5
12.3	70	30.6	1	R40	T63B6	0.3
11.8	73	45.2	2.4	CB50	T63B6	0.7
11.8	114	45.4	2.4	CB50	T56B4	0.7
10.8	80	37.6	1.8	R50	T63B6	0.5
10.8	80	31.8	0.9	R40	T63B6	0.3
10.6	127	48	1.4	CB40	T56B4	0.5
10.4	262	36.4	1.6	CB50	T56A2	0.5
10.4	83	51.4	4.4	CB70	T63B6	1.2
10.4	83	48.8	1.3	CB40	T63B6	0.5
9.6	140	50.3	5.3	40/70	T56B4	1.0
9.6	140	51.2	4.6	40/63	T56B4	1.0
9.6	140	49.4	4.2	28/70	T56B4	0.6
9.6	140	50.4	4.1	28/63	T56B4	0.6
9.6	140	48.5	2.3	28/50	T56B4	0.6
9.6	140	50.3	2.2	40/50	T56B4	1.0
9.6	140	45.7	1.4	28/40	T56B4	0.6
9.6	140	46.8	1.4	40/40	T56B4	1.0
9.6	90	52.9	2.1	CB50	T63B6	0.7
9.4	290	43	2.2	CB50	T56A2	0.6
9.3	295	38	0.8	CB40	T56A2	0.3
8.9	97	57.2	1.9	CB50	T63B6	0.7
8.6	100	43.9	1.3	R50	T63B6	0.4
8.6	100	40.9	0.7	R40	T63B6	0.3
8.1	165	51.7	1	CB40	T56B4	0.4
8.1	337	43.5	0.7	CB40	T56A2	0.3
7.9	109	61.2	1.1	CB40	T63B6	0.4
7.9	170	57.9	1.8	CB50	T56B4	0.6
7.9	347	47	1.3	CB50	T56A2	0.5
7.8	110	64.8	3.9	CB70	T63B6	1.0
7.5	114	67.3	1.6	CB50	T63B6	0.7
7	388	50	0.6	CB40	T56A2	0.3
6.8	127	70.8	1	CB40	T63B6	0.4
6.7	199	67.7	1.5	CB50	T56B4	0.6
6.7	407	55.1	1.1	CB50	T56A2	0.5
6.7	200	69.2	4.2	40/70	T56B4	0.9
6.7	200	69.2	3.6	40/63	T56B4	0.9
6.7	200	67.9	3.4	28/70	T56B4	0.5
6.7	200	67.9	3.4	28/63	T56B4	0.5
6.7	200	66.9	1.6	28/50	T56B4	0.5
6.7	200	67.8	1.6	40/50	T56B4	0.9
6.7	200	63	1.1	28/40	T56B4	0.5
6.7	200	64.3	1.1	40/40	T56B4	0.9
6.7	129	76.1	6.3	CB85	T63B6	1.3
6.6	130	76.7	3.3	CB70	T63B6	1.0
6	222	67.2	0.8	CB40	T56B4	0.4
5.2	165	74.1	0.8	CB40	T63B6	0.3
5.2	166	84.6	3	CB70	T63B6	0.8
5.1	168	87.3	5.5	CB85	T63B6	1.1
5.1	262	67.5	0.9	CB50	T56B4	0.5
5.1	170	84.6	1.3	CB50	T63B6	0.5
4.8	280	82.6	6.1	40/85	T56B4	0.9
4.8	280	82.6	3.5	40/70	T56B4	0.9
4.8	280	80.8	3.4	28/70	T56B4	0.5
4.8	280	82.4	3	28/63	T56B4	0.5
4.8	280	84.3	3	40/63	T56B4	0.9
4.8	280	82.5	1.3	28/50	T56B4	0.5
4.8	280	84.6	1.3	40/50	T56B4	0.9
4.8	280	76.8	0.9	28/40	T56B4	0.5
4.8	280	80.8	0.9	40/40	T56B4	0.9
4.6	290	93.4	1.2	CB50	T56B4	0.6
4.6	591	74	0.8	CB50	T56A2	0.5
4.3	199	99	1.1	CB50	T63B6	0.5
3.9	222	98	0.6	CB40	T63B6	0.3
3.9	347	84.4	0.7	CB50	T56B4	0.5
3.8	225	117.1	4.1	CB85	T63B6	1.1
3.8	228	113.9	2.4	CB70	T63B6	0.8

1.7 - Getriebemotoren

n_2 min^{-1}	ir	T2 Nm	FS'		0.09 kW	Ptn kW
3.4	400	125.7	4.0	40/85	T56B4	0.6
3.4	400	120.5	2.7	40/70	T56B4	0.6
3.4	400	120.3	2.1	40/63	T56B4	0.6
3.4	400	118.4	1.6	28/63	T56B4	0.4
3.4	400	118.4	1.6	28/70	T56B4	0.4
3.4	400	117.9	0.9	28/50	T56B4	0.4
3.4	400	120.7	0.9	40/50	T56B4	0.6
3.4	400	110.5	0.6	28/40	T56B4	0.4
3.4	400	112.5	0.6	40/40	T56B4	0.6
3.3	407	100.0	0.6	CB50	T56B4	0.5
3.3	262	100.0	0.6	CB50	T63B6	0.5
3.0	286	120.0	2.5	CB85	T63B6	1.0
3.0	290	141.4	0.8	CB50	T63B6	0.5
2.9	295	117.5	1.5	CB70	T63B6	0.7
2.8	303	142.6	2.0	CB70	T63B6	0.7
2.5	339	129.1	1.4	CB70	T63B6	0.7
2.5	342	133.8	2.4	CB85	T63B6	0.9
2.2	600	154.1	3.2	40/85	T56B4	0.7
2.2	600	146.6	2.2	28/70	T56B4	0.5
2.2	600	150.5	2.1	40/70	T56B4	0.7
2.2	600	146.1	1.7	28/63	T56B4	0.5
2.2	600	150.0	1.7	40/63	T56B4	0.7
2.2	600	145.6	0.8	28/50	T56B4	0.5
2.2	600	150.0	0.7	40/50	T56B4	0.7
2.2	394	154.1	2.1	CB85	T63B6	0.9
2.2	394	145.8	1.3	CB70	T63B6	0.7
1.9	460	179.5	1.8	CB85	T63B6	0.9
1.9	464	171.6	1.1	CB70	T63B6	0.7
1.7	504	241.5	6.1	CB130	T63B6	2.0
1.5	576	271.4	5.1	CB130	T63B6	2.0
1.4	618	216.9	0.9	CB70	T63B6	0.7
1.4	980	232.0	2.2	40/85	T56B4	0.4
1.4	980	219.8	1.5	40/70	T56B4	0.4
1.4	980	225.0	1.1	40/63	T56B4	0.4
1.4	980	220.9	0.9	28/70	T56B4	0.3
1.4	980	220.9	0.9	28/63	T56B4	0.3
1.2	720	318.0	5.7	CB150	T63B6	2.6
1.2	720	303.2	4.0	CB130	T63B6	1.8
0.98	1372	254.2	2.0	40/85	T56B4	0.4
0.98	1372	264.2	1.2	40/70	T56B4	0.4
0.98	1372	261.6	1.0	40/63	T56B4	0.4
0.98	1372	254.1	0.9	28/70	T56B4	0.3
0.98	1372	264.1	0.8	28/63	T56B4	0.3
0.68	1960	340.9	1.5	40/85	T56B4	0.4
0.68	1960	342.9	0.9	40/70	T56B4	0.4
0.68	1960	341.1	0.8	28/70	T56B4	0.2
0.68	1960	340.9	0.7	40/63	T56B4	0.4
0.68	1960	340.2	0.7	28/63	T56B4	0.2
0.48	2800	394.7	1.3	40/85	T56B4	0.3
0.48	2800	394.5	0.8	40/70	T56B4	0.3
0.48	2800	394.7	0.6	40/63	T56B4	0.3
0.34	4000	529.4	0.9	40/85	T56B4	0.3
0.34	4000	505.3	0.6	40/70	T56B4	0.3
0.24	5600	681.8	0.7	40/85	T56B4	0.3
0.19	7000	766.7	0.6	40/85	T56B4	0.3

1.7 - Motoriduttori

n_2 min^{-1}	ir	T2 Nm	FS'		0.11 kW	Ptn kW
262	5	3.4	11	R40	T56C4	1.1
187	7	4.5	3.3	R28	T56C4	0.6
131	10	6.5	6.5	R40	T56C4	0.9
131	10	6.3	2.7	R28	T56C4	0.5
87	15	9.3	4.5	R40	T56C4	0.7
87	15	9	2	R28	T56C4	0.5
66	20	11.7	3.2	R40	T56C4	0.6
66	20	11.5	1.3	R28	T56C4	0.4
47	28	15.1	2.9	R40	T56C4	0.5
47	28	14.4	1.3	R28	T56C4	0.3
33	40	19.2	2.1	R40	T56C4	0.4
33	40	18.9	0.8	R28	T56C4	0.3
30	44	25.8	2.3	CB40	T56C4	0.7
27	48	29.7	3.6	CB50	T56C4	1.1
27	49	22.4	1.7	R40	T56C4	0.4
27	49	22	0.7	R28	T56C4	0.3
26	50	29.2	2	CB40	T56C4	0.7
25	52	31.7	3.4	CB50	T56C4	1.1
23	56	24.3	1.5	R40	T56C4	0.4
23	56	24.3	0.6	R28	T56C4	0.2
23	58	32.9	2	CB40	T56C4	0.7
21	61	37.1	2.9	CB50	T56C4	1.1
19.3	68	38.6	1.7	CB40	T56C4	0.7
18.7	70	26.3	1.1	R40	T56C4	0.3
18	73	37.5	2.9	CB50	T56C4	0.7
16.4	80	28.3	0.9	R40	T56C4	0.3
15.8	83	40.6	1.5	CB40	T56C4	0.5
14.6	90	46.1	2.4	CB50	T56C4	0.7
13.5	97	48.2	2.3	CB50	T56C4	0.7
13.1	100	36.2	0.8	R40	T56C4	0.3
12	109	51.4	1.3	CB40	T56C4	0.5
11.5	114	56.8	1.9	CB50	T56C4	0.7
10.3	127	60.1	1.1	CB40	T56C4	0.5
9.4	140	62.8	4.2	40/70	T56C4	1.0
9.4	140	64	3.7	40/63	T56C4	1.0
9.4	140	61.7	3.4	28/70	T56C4	0.6
9.4	140	62.9	3.3	28/63	T56C4	0.6
9.4	140	60.5	1.8	28/50	T56C4	0.6
9.4	140	62.7	1.8	40/50	T56C4	1.0
9.4	140	57.2	1.1	28/40	T56C4	0.6
9.4	140	58.2	1.1	40/40	T56C4	1.0
7.9	165	64.7	0.8	CB40	T56C4	0.4
7.7	170	72.2	1.4	CB50	T56C4	0.6
6.6	199	84.6	1.2	CB50	T56C4	0.6
6.6	200	89.9	5.6	40/85	T56C4	0.9
6.6	200	86.7	3.3	40/70	T56C4	0.9
6.6	200	86.5	2.9	40/63	T56C4	0.9
6.6	200	85	2.7	28/63	T56C4	0.5
6.6	200	85	2.7	28/70	T56C4	0.5
6.6	200	83.4	1.3	28/50	T56C4	0.5
6.6	200	85.2	1.3	40/50	T56C4	0.9
6.6	200	78.6	0.9	28/40	T56C4	0.5
6.6	200	80.2	0.9	40/40	T56C4	0.9
5.9	222	83.2	0.7	CB40	T56C4	0.4
5	262	83.5	0.7	CB50	T56C4	0.5
4.7	280	103.2	4.8	40/85	T56C4	0.9
4.7	280	103.2	2.8	40/70	T56C4	0.9
4.7	280	101.1	2.7	28/70	T56C4	0.5
4.7	280	103.4	2.4	28/63	T56C4	0.5
4.7	280	105.4	2.4	40/63	T56C4	0.9
4.7	280	103.4	1.1	28/50	T56C4	0.5
4.7	280	105.2	1	40/50	T56C4	0.9
4.7	280	96.2	0.7	28/40	T56C4	0.5
4.7	280	101.3	0.7	40/40	T56C4	0.9
4.5	290	116.3	0.9	CB50	T56C4	0.6
3.3	400	157.1	3.2	40/85	T56C4	0.6
3.3	400	150.4	2.1	40/70	T56C4	0.6
3.3	400	150.3	1.7	40/63	T56C4	0.6
3.3	400	147.7	1.3	28/63	T56C4	0.4
3.3	400	147.7	1.3	28/70	T56C4	0.4
3.3	400	147.6	0.7	28/50	T56C4	0.4
3.3	400	151.2	0.7	40/50	T56C4	0.6
2.2	600	193	2.6	40/85	T56C4	0.7
2.2	600	182.9	1.7	28/70	T56C4	0.5
2.2	600	187.9	1.7	40/70	T56C4	0.7
2.2	600	183.3	1.4	28/63	T56C4	0.5
2.2	600	188.4	1.3	40/63	T56C4	0.7
2.2	600	183.3	0.6	28/50	T56C4	0.5
1.3	980	289.5	1.7	40/85	T56C4	0.4
1.3	980	275	1.2	40/70	T56C4	0.4

1.7 - *Gearmotors*

n_2 min^{-1}	ir	T2 Nm	FS'		0.11 kW	Ptn kW
1.3	980	283.5	0.9	40/63	T56C4	0.4
1.3	980	273.6	0.7	28/63	T56C4	0.3
1.3	980	273.6	0.7	28/70	T56C4	0.3
0.95	1372	319.8	1.6	40/85	T56C4	0.4
0.95	1372	332.1	1	40/70	T56C4	0.4
0.95	1372	331.3	0.8	40/63	T56C4	0.4
0.95	1372	322.8	0.7	28/70	T56C4	0.3
0.95	1372	331.5	0.7	28/63	T56C4	0.3
0.67	1960	423.1	1.2	40/85	T56C4	0.4
0.67	1960	424.1	0.8	40/70	T56C4	0.4
0.67	1960	422.4	0.7	28/70	T56C4	0.2
0.47	2800	491.1	1	40/85	T56C4	0.3
0.47	2800	488.9	0.7	40/70	T56C4	0.3
0.33	4000	670.7	0.7	40/85	T56C4	0.3

1.7 - Getriebemotoren

n_2 min^{-1}	ir	T2 Nm	FS'		0.13 kW	Ptn kW
550	5	2.1	13	R40	T56B2	1.1
393	7	2.8	3.9	R28	T56B2	0.6
275	10	3.9	3.3	R28	T56B2	0.5
191	7	5.3	2.9	R28	T63A4	0.6
183	15	5.8	5.5	R40	T56B2	0.7
183	15	5.7	2.5	R28	T56B2	0.5
138	20	7.4	3.9	R40	T56B2	0.6
138	20	7.3	1.6	R28	T56B2	0.4
134	10	7.5	5.6	R40	T63A4	0.9
134	10	7.3	2.3	R28	T63A4	0.5
126	7	8	5.5	R40	T63C6	0.9
126	7	7.8	2.3	R28	T63C6	0.6
98	28	9.7	3.5	R40	T56B2	0.5
98	28	9.4	1.6	R28	T56B2	0.3
89	15	10.7	3.9	R40	T63A4	0.7
89	15	10.4	1.7	R28	T63A4	0.5
88	10	11.1	4.4	R40	T63C6	0.8
88	10	10.9	1.8	R28	T63C6	0.5
69	40	12.7	2.5	R40	T56B2	0.4
69	40	12.5	1.0	R28	T56B2	0.3
67	20	14.1	5.3	R50	T63A4	1.0
67	20	13.5	2.7	R40	T63A4	0.6
67	20	13.4	1.1	R28	T63A4	0.4
63	44	16	3.1	CB40	T56B2	0.7
59	15	16.7	5.3	R50	T63C6	1.2
59	15	15.9	3.1	R40	T63C6	0.7
59	15	15.5	1.3	R28	T63C6	0.5
57	48	18.4	4.8	CB50	T56B2	1.2
56	49	14.8	2.0	R40	T56B2	0.4
56	49	14.5	0.8	R28	T56B2	0.3
55	50	18.2	2.7	CB40	T56B2	0.7
53	52	20	4.7	CB50	T56B2	1.2
49	56	16.3	1.7	R40	T56B2	0.4
49	56	16	0.8	R28	T56B2	0.2
48	28	18.2	4.4	R50	T63A4	0.8
48	28	17.4	2.5	R40	T63A4	0.5
48	28	16.6	1.1	R28	T63A4	0.3
47	58	21.2	2.5	CB40	T56B2	0.7
45	61	23.4	4.0	CB50	T56B2	1.2
44	20	20.9	4.1	R50	T63C6	0.9
44	20	19.8	2.2	R40	T63C6	0.6
44	20	19.5	0.9	R28	T63C6	0.4
40	68	24.5	2.3	CB40	T56B2	0.7
39	70	18	1.3	R40	T56B2	0.3
38	73	23.8	3.9	CB50	T56B2	0.8
34	80	19.5	1.1	R40	T56B2	0.3
34	40	24.4	3.3	R50	T63A4	0.7
34	40	22.2	1.8	R40	T63A4	0.4
34	40	21.9	0.7	R28	T63A4	0.3
33	83	25.8	1.9	CB40	T56B2	0.5
31	28	26.5	3.5	R50	T63C6	0.7
31	28	25.3	2.0	R40	T63C6	0.5
31	28	24.2	0.9	R28	T63C6	0.3
31	90	29.3	3.1	CB50	T56B2	0.8
30	44	29.7	2.0	CB40	T63A4	0.7
28	97	31.1	3.1	CB50	T56B2	0.8
28	48	34.3	3.1	CB50	T63A4	1.1
28	100	24.8	0.9	R40	T56B2	0.3
27	49	28.6	2.5	R50	T63A4	0.7
27	49	25.9	1.5	R40	T63A4	0.4
27	50	33.8	1.7	CB40	T63A4	0.7
26	51	35.9	5.7	CB70	T63A4	1.6
26	52	36.7	2.9	CB50	T63A4	1.1
25	109	33.4	1.6	CB40	T56B2	0.5
24	114	36.6	2.7	CB50	T56B2	0.8
24	56	31.1	2.2	R50	T63A4	0.6
24	56	28	1.3	R40	T63A4	0.4
23	58	38.2	1.7	CB40	T63A4	0.7
23	59	40.5	5.8	CB70	T63A4	1.6
22	40	35.6	2.6	R50	T63C6	0.7
22	40	31.6	1.4	R40	T63C6	0.4
22	61	42.9	2.5	CB50	T63A4	1.1
22	127	38.2	1.5	CB40	T56B2	0.5
20	44	46	5.1	CB70	T63C6	1.6
20	44	44	1.5	CB40	T63C6	0.7
19.7	68	44.7	1.5	CB40	T63A4	0.7
19.1	70	48	4.9	CB70	T63A4	1.6
19.1	70	36.3	1.8	R50	T63A4	0.6
19.1	70	30.6	0.9	R40	T63A4	0.3
18.4	73	43.3	2.5	CB50	T63A4	0.7

1.7 - Motoriduttori

n_2 min^{-1}	ir	T2 Nm	FS'		0.13 kW	Ptn kW
18.3	48	50.9	2.1	CB50	T63C6	1.0
18.0	49	40.8	2	R50	T63C6	0.6
18.0	49	36.5	1.2	R40	T63C6	0.4
17.6	50	50	1.3	CB40	T63C6	0.6
17.3	51	52.5	4.5	CB70	T63C6	1.5
16.9	52	54.4	2	CB50	T63C6	1.0
16.8	80	37.9	1.5	R50	T63A4	0.5
16.8	80	32.5	0.8	R40	T63A4	0.3
16.7	165	42.4	1	CB40	T56B2	0.4
16.2	170	48	1.8	CB50	T56B2	0.7
16.1	83	49.3	4.1	CB70	T63A4	1.2
16.1	83	47.1	1.3	CB40	T63A4	0.5
15.7	56	44.3	1.8	R50	T63C6	0.6
15.7	56	40.3	1	R40	T63C6	0.3
15.2	58	56.5	1.2	CB40	T63C6	0.6
14.9	59	59.9	4.4	CB70	T63C6	1.5
14.9	90	53.3	2	CB50	T63A4	0.7
14.4	61	63.6	1.7	CB50	T63C6	1.0
13.8	199	56	1.5	CB50	T56B2	0.6
13.8	97	55.6	2	CB50	T63A4	0.7
13.4	100	44.5	1.2	R50	T63A4	0.5
13.4	100	41.8	0.7	R40	T63A4	0.3
12.9	68	66.4	1.1	CB40	T63C6	0.6
12.6	70	71.1	3.7	CB70	T63C6	1.5
12.6	70	51.4	1.4	R50	T63C6	0.5
12.6	70	43.3	0.7	R40	T63C6	0.3
12.4	222	55.1	0.9	CB40	T56B2	0.4
12.3	109	59.5	1.1	CB40	T63A4	0.5
12.2	110	63.2	3.6	CB70	T63A4	1.2
12.1	73	63.8	1.7	CB50	T63C6	0.7
11.8	114	65.6	1.7	CB50	T63A4	0.7
11.0	80	70	6.2	CB85	T63C6	1.5
11.0	80	53	1.2	R50	T63C6	0.5
11.0	80	44.9	0.6	R40	T63C6	0.3
10.6	83	72.6	3.1	CB70	T63C6	1.2
10.6	83	69.3	0.9	CB40	T63C6	0.5
10.6	127	69.3	0.9	CB40	T63A4	0.5
10.5	262	56.2	1.1	CB50	T56B2	0.5
10.4	129	74.1	5.8	CB85	T63A4	1.5
10.3	130	74.7	3.1	CB70	T63A4	1.2
9.8	90	74.9	1.5	CB50	T63C6	0.7
9.6	140	76.6	6.5	40/85	T63A4	1.0
9.6	140	77.8	6.4	50/85	T63A4	1.5
9.6	140	72.6	3.7	40/70	T63A4	1.0
9.6	140	73.9	3.6	50/70	T63A4	1.5
9.6	140	74	3.2	40/63	T63A4	1.0
9.6	140	71.4	2.9	28/70	T63A4	0.6
9.6	140	72.7	2.8	28/63	T63A4	0.6
9.6	140	70.1	1.6	28/50	T63A4	0.6
9.6	140	72.6	1.5	40/50	T63A4	1.0
9.6	140	66	1	28/40	T63A4	0.6
9.6	140	67.6	0.9	40/40	T63A4	1.0
9.5	290	66.2	1.5	CB50	T56B2	0.6
9.1	97	80.8	1.4	CB50	T63C6	0.7
8.8	100	61.9	1	R50	T63C6	0.4
8.1	165	74.7	0.7	CB40	T63A4	0.4
8.1	166	86	2.6	CB70	T63A4	1.0
8.1	109	85.8	0.8	CB40	T63C6	0.4
8.0	110	91.5	5.2	CB85	T63C6	1.3
8.0	110	91.5	2.8	CB70	T63C6	1.0
8.0	168	90.2	4.3	CB85	T63A4	1.3
7.9	347	72.4	0.8	CB50	T56B2	0.5
7.9	170	83.7	1.2	CB50	T63A4	0.6
7.7	114	94.7	1.2	CB50	T63C6	0.7
6.9	127	100	0.7	CB40	T63C6	0.4
6.8	129	107.4	4.5	CB85	T63C6	1.3
6.8	130	108.3	2.3	CB70	T63C6	1.0
6.8	407	84.8	0.7	CB50	T56B2	0.5
6.7	199	97.7	1.1	CB50	T63A4	0.6
6.7	200	103.8	4.8	40/85	T63A4	0.9
6.7	200	105.7	4.7	50/85	T63A4	1.4
6.7	200	100	2.9	40/70	T63A4	0.9
6.7	200	101.9	2.8	50/70	T63A4	1.4
6.7	200	100	2.5	40/63	T63A4	0.9
6.7	200	98.1	2.3	28/70	T63A4	0.5
6.7	200	98.1	2.3	28/63	T63A4	0.5
6.7	200	96.6	1.1	28/50	T63A4	0.5
6.7	200	97.9	1.1	40/50	T63A4	0.9
6.7	200	91	0.8	28/40	T63A4	0.5
6.7	200	92.9	0.8	40/40	T63A4	0.9

1.7 - *Gearmotors*

n_2 min^{-1}	ir	T2 Nm	FS'		0.13 kW	Ptn kW
6.0	225	114.7	3.8	CB85	T63A4	1.3
5.9	228	112.1	2.2	CB70	T63A4	1.0
5.3	166	119.5	2.1	CB70	T63C6	0.8
5.2	168	123.3	3.9	CB85	T63C6	1.1
5.2	170	120.2	0.9	CB50	T63C6	0.5
5.1	262	97.5	0.6	CB50	T63A4	0.5
4.8	280	119.3	4.2	40/85	T63A4	0.9
4.8	280	121.7	4.1	50/85	T63A4	1.4
4.8	280	119.3	2.4	40/70	T63A4	0.9
4.8	280	122	2.4	50/70	T63A4	1.4
4.8	280	116.7	2.3	28/70	T63A4	0.5
4.8	280	119	2.1	28/63	T63A4	0.5
4.8	280	121.7	2.1	40/63	T63A4	0.9
4.8	280	119.2	0.9	28/50	T63A4	0.5
4.8	280	122.2	0.9	40/50	T63A4	0.9
4.8	280	111	0.6	28/40	T63A4	0.5
4.8	280	116.7	0.6	40/40	T63A4	0.9
4.7	286	116.3	2.4	CB85	T63A4	1.0
4.6	290	134.9	0.8	CB50	T63A4	0.6
4.5	295	117.3	1.4	CB70	T63A4	0.7
4.4	303	137.5	2	CB70	T63A4	0.7
4.4	199	140.2	0.8	CB50	T63C6	0.5
4	339	134.9	1.2	CB70	T63A4	0.7
3.9	342	139.4	2	CB85	T63A4	1.0
3.9	225	165.1	2.9	CB85	T63C6	1.1
3.9	228	160.9	1.7	CB70	T63C6	0.8
3.4	394	153.2	2	CB85	T63A4	1.0
3.4	394	145.8	1.2	CB70	T63A4	0.7
3.4	400	192.6	5.2	50/110	T63A4	1.0
3.4	400	181.6	2.8	40/85	T63A4	0.6
3.4	400	189	2.6	50/85	T63A4	1.0
3.4	400	174.1	1.8	40/70	T63A4	0.6
3.4	400	181.7	1.8	50/70	T63A4	1.0
3.4	400	173.8	1.4	40/63	T63A4	0.6
3.4	400	171	1.1	28/63	T63A4	0.4
3.4	400	171	1.1	28/70	T63A4	0.4
3.4	400	170.2	0.6	28/50	T63A4	0.4
3.4	400	174.4	0.6	40/50	T63A4	0.6
3.1	286	169.6	1.8	CB85	T63C6	1.0
3	295	166.1	1.1	CB70	T63C6	0.7
2.9	460	178.8	1.7	CB85	T63A4	1.0
2.9	303	201.6	1.4	CB70	T63C6	0.7
2.9	464	172.3	1	CB70	T63A4	0.7
2.7	323	242	5.9	CB130	T63C6	2.2
2.7	504	233.5	5.8	CB130	T63A4	2.2
2.6	339	182	1	CB70	T63C6	0.7
2.6	342	188.1	1.7	CB85	T63C6	0.9
2.3	576	261	4.9	CB130	T63A4	2.2
2.2	600	244.8	4.1	50/110	T63A4	1.2
2.2	600	222.6	2.2	40/85	T63A4	0.7
2.2	600	233.8	2.1	50/85	T63A4	1.2
2.2	394	216.9	1.5	CB85	T63C6	0.9
2.2	600	211.8	1.5	28/70	T63A4	0.5
2.2	600	217.4	1.5	40/70	T63A4	0.7
2.2	600	228.2	1.4	50/70	T63A4	1.2
2.2	600	211	1.2	28/63	T63A4	0.5
2.2	600	216.7	1.2	40/63	T63A4	0.7
2.2	394	206.9	0.9	CB70	T63C6	0.7
2.2	403	296.2	5	CB130	T63C6	2.2
2.2	618	205.1	0.9	CB70	T63A4	0.7
1.9	460	253	1.3	CB85	T63C6	0.9
1.9	464	242.8	0.8	CB70	T63C6	0.7
1.9	720	307	5.5	CB150	T63A4	2.7
1.9	720	293.5	3.8	CB130	T63A4	2.0
1.8	504	347.5	6.2	CB150	T63C6	2.9
1.8	504	340.7	4.3	CB130	T63C6	2.0
1.5	576	381.2	5.4	CB150	T63C6	2.8
1.5	576	381.2	3.7	CB130	T63C6	2.0
1.4	618	305.5	0.6	CB70	T63C6	0.7
1.4	980	371.4	2.7	50/110	T63A4	0.7
1.4	980	335.1	1.5	40/85	T63A4	0.4
1.4	980	371.4	1.3	50/85	T63A4	0.7
1.4	980	317.6	1	40/70	T63A4	0.4
1.4	980	352.5	0.9	50/70	T63A4	0.7
1.4	980	325	0.8	40/63	T63A4	0.4
1.2	720	448	4.1	CB150	T63C6	2.6
1.2	720	427.2	2.8	CB130	T63C6	1.8
1.2	750	466.8	6.3	CB180	T63C6	3.6
0.98	1372	430.5	2.3	50/110	T63A4	0.7
0.98	1372	367.2	1.4	40/85	T63A4	0.4

1.7 - Getriebemotoren

n_2 min^{-1}	ir	T2 Nm	FS'		0.13 kW	Ptn kW
0.98	1372	406.2	1.2	50/85	T63A4	0.7
0.98	1372	381.7	0.8	40/70	T63A4	0.4
0.98	1372	416	0.8	50/70	T63A4	0.7
0.98	1372	377.9	0.7	40/63	T63A4	0.4
0.68	1960	583	1.7	50/110	T63A4	0.7
0.68	1960	492.4	1	40/85	T63A4	0.4
0.68	1960	546.2	0.9	50/85	T63A4	0.7
0.68	1960	495.2	0.6	40/70	T63A4	0.4
0.48	2800	698.9	1.4	50/110	T63A4	0.6
0.48	2800	570.2	0.9	40/85	T63A4	0.3
0.48	2800	670.1	0.7	50/85	T63A4	0.6
0.34	4000	838.7	1.2	50/110	T63A4	0.5
0.34	4000	764.7	0.7	40/85	T63A4	0.3
0.34	4000	802.5	0.6	50/85	T63A4	0.5
0.24	5600	1083	0.9	50/110	T63A4	0.5
0.19	7000	1236	0.8	50/110	T63A4	0.5
0.17	8000	1315	0.7	50/110	T63A4	0.5

1.7 - Motoriduttori

n_2 min^{-1}	ir	T2 Nm	FS'		0.18 kW	Ptn kW
554	5	2.7	10	R40	T63A2	1.1
396	7	3.6	3.1	R28	T63A2	0.6
277	10	5.2	6	R40	T63A2	0.9
277	10	5	2.6	R28	T63A2	0.5
272	5	5.4	6.8	R40	T63B4	1.1
194	7	7.3	5	R40	T63B4	1
194	7	7.2	2.1	R28	T63B4	0.6
185	15	7.5	4.3	R40	T63A2	0.7
185	15	7.3	1.9	R28	T63A2	0.5
139	20	9.8	5.8	R50	T63A2	1
139	20	9.4	3.1	R40	T63A2	0.6
139	20	9.3	1.3	R28	T63A2	0.4
136	10	10.2	4.1	R40	T63B4	0.9
136	10	10	1.7	R28	T63B4	0.5
133	7	10.5	4.2	R40	T71A6	0.9
99	28	12.9	4.8	R50	T63A2	0.8
99	28	12.3	2.8	R40	T63A2	0.5
99	28	12	1.3	R28	T63A2	0.3
93	10	15	5.7	R50	T71A6	1.3
93	10	14.6	3.4	R40	T71A6	0.8
91	15	15.2	5	R50	T63B4	1.2
91	15	14.6	2.9	R40	T63B4	0.7
91	15	14.2	1.3	R28	T63B4	0.5
69	40	17.4	3.7	R50	T63A2	0.7
69	40	16.1	2	R40	T63A2	0.4
69	40	15.9	0.8	R28	T63A2	0.3
68	20	19.2	3.9	R50	T63B4	1
68	20	18.4	2	R40	T63B4	0.6
68	20	18.2	0.8	R28	T63B4	0.4
63	44	20.5	2.4	CB40	T63A2	0.7
62	15	21.9	4.1	R50	T71A6	1.2
62	15	20.8	2.4	R40	T71A6	0.7
58	48	23.5	3.8	CB50	T63A2	1.2
57	49	20.4	2.8	R50	T63A2	0.7
57	49	18.9	1.6	R40	T63A2	0.4
55	50	23.3	2.1	CB40	T63A2	0.7
53	52	25.5	3.7	CB50	T63A2	1.2
49	56	22.6	2.4	R50	T63A2	0.6
49	56	20.8	1.3	R40	T63A2	0.4
49	28	24.8	3.2	R50	T63B4	0.8
49	28	23.7	1.8	R40	T63B4	0.5
49	28	22.6	0.8	R28	T63B4	0.3
48	58	27	1.9	CB40	T63A2	0.7
47	59	28.6	6.3	CB70	T63A2	1.8
47	20	27.7	5.7	R63	T71A6	1.4
47	20	27.3	3.1	R50	T71A6	0.9
47	20	25.9	1.7	R40	T71A6	0.6
45	61	29.9	3.1	CB50	T63A2	1.2
41	68	31.2	1.8	CB40	T63A2	0.7
40	70	33.4	5.8	CB70	T63A2	1.8
40	70	26.5	2	R50	T63A2	0.6
40	70	23	1	R40	T63A2	0.3
38	73	30.3	3	CB50	T63A2	0.8
35	80	28.3	1.7	R50	T63A2	0.5
35	80	24.9	0.8	R40	T63A2	0.3
34	40	33.4	2.4	R50	T63B4	0.7
34	40	30.4	1.3	R40	T63B4	0.4
33	83	35	4.9	CB70	T63A2	1.3
33	83	33	1.5	CB40	T63A2	0.5
33	28	35.2	4.4	R63	T71A6	1.1
33	28	34.6	2.7	R50	T71A6	0.7
33	28	33.1	1.5	R40	T71A6	0.5
31	44	42.3	4.9	CB70	T63B4	1.6
31	44	40.5	1.5	CB40	T63B4	0.7
31	90	37.4	2.5	CB50	T63A2	0.8
29	97	39.7	2.4	CB50	T63A2	0.8
28	48	46.8	2.3	CB50	T63B4	1.1
28	49	39	1.8	R50	T63B4	0.7
28	49	35.3	1.1	R40	T63B4	0.4
28	100	33.5	1.3	R50	T63A2	0.5
28	100	31.6	0.7	R40	T63A2	0.3
27	50	46.2	1.3	CB40	T63B4	0.7
27	51	49	4.2	CB70	T63B4	1.6
26	52	50	2.2	CB50	T63B4	1.1
25	109	42.5	1.2	CB40	T63A2	0.5
25	110	45.8	3.9	CB70	T63A2	1.3
24	114	46.7	2.1	CB50	T63A2	0.8
24	56	42.5	1.6	R50	T63B4	0.6
24	56	38.1	0.9	R40	T63B4	0.4
23	58	52	1.3	CB40	T63B4	0.7

1.7 - *Gearmotors*

n_2 min^{-1}	ir	T2 Nm	FS'		0.18 kW	Ptn kW
23	40	47.3	3.9	R70	T71A6	1.1
23	40	47.4	3.5	R63	T71A6	1
23	40	46.5	2	R50	T71A6	0.7
23	40	41.3	1.1	R40	T71A6	0.4
23	59	55.2	4.2	CB70	T63B4	1.6
22	61	58.6	1.8	CB50	T63B4	1.1
22	127	48.9	1.1	CB40	T63A2	0.5
21	130	53.2	3.6	CB70	T63A2	1.3
21	44	60.2	3.9	CB70	T71A6	1.6
20	68	60.9	1.1	CB40	T63B4	0.7
19.4	70	65.5	3.6	CB70	T63B4	1.6
19.4	70	49.4	1.3	R50	T63B4	0.6
19.4	70	41.7	0.7	R40	T63B4	0.3
19.4	48	66.6	1.6	CB50	T71A6	1
19	49	54.4	3.5	R70	T71A6	1
19	49	55.2	2.6	R63	T71A6	0.9
19	49	53.5	1.5	R50	T71A6	0.6
19	49	48.1	0.9	R40	T71A6	0.4
18.6	73	59.1	1.8	CB50	T63B4	0.7
18.2	51	68.8	3.4	CB70	T71A6	1.5
17.9	52	71.2	1.5	CB50	T71A6	1
17	80	65.8	5.8	CB85	T63B4	1.5
17	80	51.7	1.1	R50	T63B4	0.5
16.8	165	54.1	0.8	CB40	T63A2	0.4
16.7	166	61.8	3.1	CB70	T63A2	1
16.6	56	60	3.2	R70	T71A6	0.9
16.6	56	60	2.4	R63	T71A6	0.8
16.6	56	58	1.3	R50	T71A6	0.6
16.6	56	52.9	0.8	R40	T71A6	0.3
16.5	168	64.7	5.1	CB85	T63A2	1.4
16.4	83	67.1	3	CB70	T63B4	1.2
16.4	83	64	0.9	CB40	T63B4	0.5
16.3	170	61.2	1.4	CB50	T63A2	0.7
15.8	59	79.6	6.3	CB85	T71A6	2
15.8	59	78.5	3.4	CB70	T71A6	1.5
15.3	61	83.5	1.3	CB50	T71A6	1
15.1	90	72.9	1.5	CB50	T63B4	0.7
14	97	76.2	1.4	CB50	T63B4	0.7
13.9	199	71.7	1.2	CB50	T63A2	0.6
13.6	100	60.8	0.9	R50	T63B4	0.5
13.5	69	93.1	5.4	CB85	T71A6	2
13.3	70	93.2	2.8	CB70	T71A6	1.5
13.3	70	69.8	2.4	R70	T71A6	0.8
13.3	70	69.8	1.9	R63	T71A6	0.8
13.3	70	67.2	1.1	R50	T71A6	0.5
12.7	73	83.5	1.3	CB50	T71A6	0.7
12.5	109	81.2	0.8	CB40	T63B4	0.5
12.5	222	70.2	0.7	CB40	T63A2	0.4
12.4	110	86.2	5	CB85	T63B4	1.5
12.4	110	86.2	2.6	CB70	T63B4	1.2
12.3	225	83.8	4.1	CB85	T63A2	1.4
12.2	228	80.7	2.6	CB70	T63A2	1
11.9	114	89.2	1.2	CB50	T63B4	0.7
11.6	80	91.7	4.7	CB85	T71A6	1.5
11.6	80	74	2.2	R70	T71A6	0.8
11.6	80	75.4	1.6	R63	T71A6	0.7
11.6	80	69.5	1	R50	T71A6	0.5
11.2	83	95.2	2.4	CB70	T71A6	1.2
10.7	127	94.4	0.7	CB40	T63B4	0.5
10.6	262	71.8	0.8	CB50	T63A2	0.5
10.5	129	101.1	4.3	CB85	T63B4	1.5
10.5	130	101.8	2.2	CB70	T63B4	1.2
10.3	90	98	1.1	CB50	T71A6	0.7
9.7	140	104.4	4.8	40/85	T63B4	1
9.7	140	106.3	4.7	50/85	T63B4	1.5
9.7	140	99.1	2.7	40/70	T63B4	1
9.7	140	101	2.6	50/70	T63B4	1.5
9.7	140	100.8	2.4	40/63	T63B4	1
9.7	140	97.3	2.1	28/70	T63B4	0.6
9.7	140	99.1	2.1	28/63	T63B4	0.6
9.7	140	95.7	1.2	28/50	T63B4	0.6
9.7	140	99	1.1	40/50	T63B4	1
9.7	140	90	0.7	28/40	T63B4	0.6
9.7	140	92.2	0.7	40/40	T63B4	1
9.7	286	88.7	2.7	CB85	T63A2	1.1
9.6	97	105.9	1	CB50	T71A6	0.7
9.6	290	84.7	1.1	CB50	T63A2	0.6
9.4	295	86.1	1.7	CB70	T63A2	0.8
9.3	100	87	1.7	R70	T71A6	0.7
9.3	100	86.9	1.3	R63	T71A6	0.7

1.7 - Getriebemotoren

n_2 min^{-1}	ir	T2 Nm	FS'		0.18 kW	Ptn kW
9.3	100	81.1	0.7	R50	T71A6	0.4
9.1	303	96	2.3	CB70	T63A2	0.8
8.5	110	120	4	CB85	T71A6	1.3
8.5	110	120	2.1	CB70	T71A6	1
8.2	166	117.4	1.9	CB70	T63B4	1
8.2	339	98.9	1.5	CB70	T63A2	0.8
8.2	114	124.5	0.9	CB50	T71A6	0.7
8.1	168	123.1	3.1	CB85	T63B4	1.3
8.1	342	106.2	2.3	CB85	T63A2	1.1
8	170	113.7	0.9	CB50	T63B4	0.6
8	347	92.3	0.7	CB50	T63A2	0.5
7.2	129	140.7	3.4	CB85	T71A6	1.3
7.2	130	142	1.8	CB70	T71A6	1
7	394	117.4	2.2	CB85	T63A2	1
7	394	112.3	1.3	CB70	T63A2	0.8
6.8	199	133.4	0.8	CB50	T63B4	0.6
6.8	200	141.5	3.5	40/85	T63B4	0.9
6.8	200	144	3.5	50/85	T63B4	1.4
6.8	200	136.6	2.1	40/70	T63B4	0.9
6.8	200	139.2	2.1	50/70	T63B4	1.4
6.8	200	136.4	1.8	40/63	T63B4	0.9
6.8	200	134.1	1.7	28/70	T63B4	0.5
6.8	200	134.1	1.7	28/63	T63B4	0.5
6.8	200	131.1	0.8	28/50	T63B4	0.5
6.8	200	133.8	0.8	40/50	T63B4	0.9
6	225	156.6	2.8	CB85	T63B4	1.3
6	460	131.4	2	CB85	T63A2	1
6	464	129.5	1.2	CB70	T63A2	0.8
6	228	153.1	1.6	CB70	T63B4	1
5.6	166	156.8	1.6	CB70	T71A6	0.8
5.5	168	161.5	3	CB85	T71A6	1.1
5.5	170	157.1	0.7	CB50	T71A6	0.5
4.9	280	176.8	5.7	50/110	T63B4	1.4
4.9	280	162.7	3.1	40/85	T63B4	0.9
4.9	280	166.4	3	50/85	T63B4	1.4
4.9	280	162.6	1.8	40/70	T63B4	0.9
4.9	280	166.2	1.7	50/70	T63B4	1.4
4.9	280	159.4	1.7	28/70	T63B4	0.5
4.9	280	162.5	1.5	28/63	T63B4	0.5
4.9	280	166.1	1.5	40/63	T63B4	0.9
4.9	280	162.3	0.7	28/50	T63B4	0.5
4.9	280	166.4	0.7	40/50	T63B4	0.9
4.8	576	185.9	5.9	CB130	T63A2	2.3
4.8	286	159.1	1.8	CB85	T63B4	1
4.7	290	183.3	0.6	CB50	T63B4	0.6
4.7	199	183.3	0.6	CB50	T71A6	0.5
4.6	295	160.6	1	CB70	T63B4	0.7
4.5	303	187.5	1.5	CB70	T63B4	0.7
4.5	618	165.1	1	CB70	T63A2	0.8
4.2	323	228.6	5.7	CB130	T63B4	2.5
4.1	225	216.5	2.2	CB85	T71A6	1.1
4.1	228	210.5	1.3	CB70	T71A6	0.8
4	339	184.4	0.9	CB70	T63B4	0.7
4	342	190.2	1.5	CB85	T63B4	1
3.9	720	223.2	6.5	CB150	T63A2	3
3.9	720	214.4	4.5	CB130	T63A2	2.2
3.5	394	209.7	1.5	CB85	T63B4	1
3.5	394	199.4	0.9	CB70	T63B4	0.7
3.4	400	262.8	3.8	50/110	T63B4	1
3.4	400	247.9	2	40/85	T63B4	0.6
3.4	400	257.9	1.9	50/85	T63B4	1
3.4	400	238	1.3	40/70	T63B4	0.6
3.4	400	247.2	1.3	50/70	T63B4	1
3.4	400	238.1	1.1	40/63	T63B4	0.6
3.4	400	231.9	0.8	28/70	T63B4	0.4
3.4	400	231.9	0.8	28/63	T63B4	0.4
3.4	403	275.4	5	CB130	T63B4	2.4
3.3	286	222.4	1.4	CB85	T71A6	1
3.2	288	292.6	5.9	CB130	T71A6	2.3
3.2	295	218.8	0.8	CB70	T71A6	0.7
3.1	303	263.6	1.1	CB70	T71A6	0.7
3	460	244.3	1.2	CB85	T63B4	1
2.9	464	235.1	0.7	CB70	T63B4	0.7
2.9	323	316.5	4.5	CB130	T71A6	2.2
2.7	339	238.6	0.7	CB70	T71A6	0.7
2.7	342	246.3	1.3	CB85	T71A6	0.9
2.7	504	324.7	6.1	CB150	T63B4	3
2.7	504	318.2	4.2	CB130	T63B4	2.2
2.4	576	364.1	5.2	CB150	T63B4	3
2.4	576	356.9	3.6	CB130	T63B4	2.2

1.7 - Motoriduttori

n_2 min^{-1}	ir	T2 Nm	FS'		0.18 kW	Ptn kW
2.4	394	284.3	1.2	CB85	T71A6	0.9
2.4	394	270	0.7	CB70	T71A6	0.7
2.3	403	401.8	6	CB150	T71A6	3.2
2.3	403	387	3.9	CB130	T71A6	2.2
2.3	600	333.3	3	50/110	T63B4	1.2
2.3	600	303	1.7	40/85	T63B4	0.7
2.3	600	318	1.6	50/85	T63B4	1.2
2.3	600	287.3	1.1	28/70	T63B4	0.5
2.3	600	294.7	1.1	40/70	T63B4	0.7
2.3	600	310.8	1	50/70	T63B4	1.2
2.3	600	288.5	0.9	28/63	T63B4	0.5
2.3	600	296.1	0.8	40/63	T63B4	0.7
2.2	618	281.5	0.7	CB70	T63B4	0.7
2	460	332.5	1	CB85	T71A6	0.9
1.9	720	418.6	4	CB150	T63B4	2.7
1.9	720	399.9	2.8	CB130	T63B4	2
1.9	504	455.3	4.8	CB150	T71A6	2.9
1.9	504	446.2	3.3	CB130	T71A6	2
1.8	750	436.9	6.2	CB180	T63B4	3.8
1.6	576	501.9	4.1	CB150	T71A6	2.8
1.6	576	501.5	2.8	CB130	T71A6	2
1.6	600	532.1	6.2	CB180	T71A6	3.9
1.4	980	507	2	50/110	T63B4	0.7
1.4	980	456.9	1.1	40/85	T63B4	0.4
1.4	980	508.5	1	50/85	T63B4	0.7
1.4	980	433.1	0.7	40/70	T63B4	0.4
1.4	980	484	0.7	50/70	T63B4	0.7
1.3	720	586	3.1	CB150	T71A6	2.6
1.3	720	559.5	2.2	CB130	T71A6	1.8
1.2	750	609.9	4.8	CB180	T71A6	3.6
0.99	1372	590.2	1.7	50/110	T63B4	0.7
0.99	1372	502.8	1	40/85	T63B4	0.4
0.99	1372	555.6	0.9	50/85	T63B4	0.7
0.99	1372	518.9	0.6	40/70	T63B4	0.4
0.69	1960	796.5	1.3	50/110	T63B4	0.7
0.69	1960	671.6	0.7	40/85	T63B4	0.4
0.69	1960	750	0.7	50/85	T63B4	0.7
0.49	2800	947.4	1.1	50/110	T63B4	0.6
0.49	2800	769.2	0.7	40/85	T63B4	0.3
0.34	4000	1161	0.9	50/110	T63B4	0.5
0.24	5600	1500	0.7	50/110	T63B4	0.5

1.7 - *Gearmotors*

n_2 min^{-1}	ir	T2 Nm	FS'		0.22 kW	Ptn kW
272	5	6.6	5.6	R40	T63C4	1.1
194	7	9	4.1	R40	T63C4	1
194	7	8.8	1.7	R28	T63C4	0.6
136	10	12.7	5.8	R50	T63C4	1.4
136	10	12.5	3.4	R40	T63C4	0.9
136	10	12.2	1.4	R28	T63C4	0.5
91	15	18.5	4.1	R50	T63C4	1.2
91	15	17.8	2.4	R40	T63C4	0.7
91	15	17.4	1	R28	T63C4	0.5
68	20	23.5	3.2	R50	T63C4	1
68	20	22.5	1.6	R40	T63C4	0.6
68	20	22.3	0.7	R28	T63C4	0.4
49	28	30.3	2.6	R50	T63C4	0.8
49	28	29	1.5	R40	T63C4	0.5
49	28	27.7	0.7	R28	T63C4	0.3
34	40	40.8	2	R50	T63C4	0.7
34	40	37.1	1.1	R40	T63C4	0.4
31	44	51.7	4	CB70	T63C4	1.6
31	44	49.5	1.2	CB40	T63C4	0.7
28	48	57.2	1.9	CB50	T63C4	1.1
28	49	47.7	1.5	R50	T63C4	0.7
28	49	43.1	0.9	R40	T63C4	0.4
27	50	56.4	1	CB40	T63C4	0.7
27	51	59.9	3.4	CB70	T63C4	1.6
26	52	61.1	1.8	CB50	T63C4	1.1
24	56	52	1.3	R50	T63C4	0.6
24	56	46.6	0.8	R40	T63C4	0.4
23	58	63.6	1	CB40	T63C4	0.7
23	59	67.5	3.5	CB70	T63C4	1.6
22	61	71.6	1.5	CB50	T63C4	1.1
20	68	74.5	0.9	CB40	T63C4	0.7
20	69	79.9	5.7	CB85	T63C4	2.2
19	70	80.1	2.9	CB70	T63C4	1.6
19	70	60.4	1.1	R50	T63C4	0.6
19	73	72.2	1.5	CB50	T63C4	0.7
17	80	80.4	4.7	CB85	T63C4	1.5
17	80	63.2	0.9	R50	T63C4	0.5
16	83	82	2.5	CB70	T63C4	1.2
16	83	78.2	0.8	CB40	T63C4	0.5
15	90	89.1	1.2	CB50	T63C4	0.7
14	97	93.1	1.2	CB50	T63C4	0.7
14	100	74.3	0.7	R50	T63C4	0.5
12	109	99.3	0.7	CB40	T63C4	0.5
12	110	105.4	4.1	CB85	T63C4	1.5
12	110	105.4	2.2	CB70	T63C4	1.2
12	114	109	1	CB50	T63C4	0.7
11	129	123.6	3.5	CB85	T63C4	1.5
10	130	124.5	1.8	CB70	T63C4	1.2
10	140	127.6	3.9	40/85	T63C4	1
10	140	129.9	3.9	50/85	T63C4	1.5
10	140	121.2	2.2	40/70	T63C4	1
10	140	123.5	2.2	50/70	T63C4	1.5
10	140	123.2	1.9	40/63	T63C4	1
10	140	118.9	1.7	28/70	T63C4	0.6
10	140	121.1	1.7	28/63	T63C4	0.6
10	140	116.9	0.9	28/50	T63C4	0.6
10	140	121	0.9	40/50	T63C4	1
8	166	143.5	1.6	CB70	T63C4	1
8	168	150.4	2.6	CB85	T63C4	1.3
8	170	139	0.7	CB50	T63C4	0.6
7	199	163	0.6	CB50	T63C4	0.6
7	200	179.2	5.6	50/110	T63C4	1.4
7	200	173	2.9	40/85	T63C4	0.9
7	200	176	2.8	50/85	T63C4	1.4
7	200	167	1.7	40/70	T63C4	0.9
7	200	170.1	1.7	50/70	T63C4	1.4
7	200	166.7	1.5	40/63	T63C4	0.9
7	200	163.9	1.4	28/63	T63C4	0.5
7	200	163.9	1.4	28/70	T63C4	0.5
7	200	160.3	0.7	28/50	T63C4	0.5
7	200	163.5	0.7	40/50	T63C4	0.9
6	225	191.3	2.3	CB85	T63C4	1.3
6	228	187.1	1.3	CB70	T63C4	1
5	280	216.1	4.6	50/110	T63C4	1.4
5	280	198.9	2.5	40/85	T63C4	0.9
5	280	203.3	2.5	50/85	T63C4	1.4
5	280	198.8	1.5	40/70	T63C4	0.9
5	280	203.2	1.4	50/70	T63C4	1.4
5	280	194.8	1.4	28/70	T63C4	0.5
5	280	198.6	1.3	28/63	T63C4	0.5

1.7 - Getriebemotoren

n_2 min^{-1}	ir	T2 Nm	FS'		0.22 kW	Ptn kW
5	280	203	1.2	40/63	T63C4	0.9
5	286	194.4	1.4	CB85	T63C4	1
5	288	253.7	6.2	CB130	T63C4	2.6
5	295	196.3	0.8	CB70	T63C4	0.7
4	303	229.1	1.2	CB70	T63C4	0.7
4	323	279.4	4.7	CB130	T63C4	2.5
4	339	225.4	0.7	CB70	T63C4	0.7
4	342	232.4	1.2	CB85	T63C4	1
3	394	256.2	1.2	CB85	T63C4	1
3.5	394	243.7	0.7	CB70	T63C4	0.7
3.4	400	321.2	3.1	50/110	T63C4	1
3.4	400	303	1.7	40/85	T63C4	0.6
3.4	400	315.2	1.6	50/85	T63C4	1
3.4	400	290.9	1.1	40/70	T63C4	0.6
3.4	400	302.1	1.1	50/70	T63C4	1
3.4	400	291	0.9	40/63	T63C4	0.6
3.4	400	283.5	0.7	28/63	T63C4	0.4
3.4	400	283.5	0.7	28/70	T63C4	0.4
3.4	403	349	6.4	CB150	T63C4	3.4
3.4	403	336.5	4.1	CB130	T63C4	2.4
3	460	298.6	1	CB85	T63C4	1
2.9	464	287.3	0.6	CB70	T63C4	0.7
2.7	504	396.8	5	CB150	T63C4	3
2.7	504	388.9	3.5	CB130	T63C4	2.2
2.4	576	445	4.2	CB150	T63C4	3
2.4	576	436.3	2.9	CB130	T63C4	2.2
2.3	600	471.9	6.5	CB180	T63C4	4.2
2.3	600	407.4	2.5	50/110	T63C4	1.2
2.3	600	370.4	1.4	40/85	T63C4	0.7
2.3	600	388.7	1.3	50/85	T63C4	1.2
2.3	600	351.1	0.9	28/70	T63C4	0.5
2.3	600	360.2	0.9	40/70	T63C4	0.7
2.3	600	379.9	0.8	50/70	T63C4	1.2
2.3	600	352.6	0.7	28/63	T63C4	0.5
2.3	600	361.8	0.7	40/63	T63C4	0.7
1.9	720	511.6	3.3	CB150	T63C4	2.7
1.9	720	488.7	2.3	CB130	T63C4	2
1.8	750	534	5.1	CB180	T63C4	3.8
1.4	980	619.7	1.6	50/110	T63C4	0.7
1.4	980	558.4	0.9	40/85	T63C4	0.4
1.4	980	621.5	0.8	50/85	T63C4	0.7
1.4	980	529.3	0.6	40/70	T63C4	0.4
1	1372	721.3	1.4	50/110	T63C4	0.7
1	1372	614.5	0.8	40/85	T63C4	0.4
1	1372	679	0.7	50/85	T63C4	0.7
0.69	1960	973.5	1	50/110	T63C4	0.7
0.69	1960	820.9	0.6	40/85	T63C4	0.4
0.49	2800	1158	0.9	50/110	T63C4	0.6
0.34	4000	1419	0.7	50/110	T63C4	0.5

1.7 - Motoriduttori

n_2 min^{-1}	ir	T2 Nm	FS'		0.25 kW	Ptn kW
564	5	3.6	7.5	R40	T63B2	1.1
403	7	5.0	5.4	R40	T63B2	1.0
403	7	4.9	2.2	R28	T63B2	0.6
282	5	7.2	5.1	R40	T71A4	1.1
282	10	7.0	4.4	R40	T63B2	0.9
282	10	6.9	1.9	R28	T63B2	0.5
201	7	9.8	3.8	R40	T71A4	1
188	15	10.4	5.6	R50	T63B2	1.2
188	15	10.2	3.1	R40	T63B2	0.7
188	15	9.9	1.4	R28	T63B2	0.5
141	10	13.9	5.3	R50	T71A4	1.4
141	20	13.4	4.3	R50	T63B2	1
141	10	13.7	3.1	R40	T71A4	0.9
141	20	12.9	2.3	R40	T63B2	0.6
141	20	12.7	0.9	R28	T63B2	0.4
126	7	15.8	5.1	R50	T71B6	1.4
126	7	15.4	2.9	R40	T71B6	0.9
101	28	17.5	3.5	R50	T63B2	0.8
101	28	16.8	2	R40	T63B2	0.5
101	28	16.4	0.9	R28	T63B2	0.3
94	15	20.3	6.4	R63	T71A4	1.7
94	15	20.3	3.7	R50	T71A4	1.2
94	15	19.6	2.1	R40	T71A4	0.7
88	10	22	3.9	R50	T71B6	1.3
88	10	21.4	2.3	R40	T71B6	0.8
71	20	26.1	5.2	R63	T71A4	1.5
71	20	25.7	2.9	R50	T71A4	1
71	40	23.7	2.7	R50	T63B2	0.7
71	20	24.7	1.5	R40	T71A4	0.6
71	40	22	1.5	R40	T63B2	0.4
71	40	21.7	0.6	R28	T63B2	0.3
64	44	29	5.9	CB70	T63B2	1.8
64	44	28	1.8	CB40	T63B2	0.7
59	48	32.1	2.8	CB50	T63B2	1.2
59	15	31.7	4.8	R63	T71B6	1.6
59	15	32.2	2.8	R50	T71B6	1.2
59	15	30.5	1.6	R40	T71B6	0.7
58	49	27.8	2.1	R50	T63B2	0.7
58	49	25.7	1.2	R40	T63B2	0.4
56	50	31.7	1.5	CB40	T63B2	0.7
55	51	33.7	5	CB70	T63B2	1.8
54	52	34.8	2.7	CB50	T63B2	1.2
50	28	33.6	4	R63	T71A4	1.2
50	28	33.2	2.4	R50	T71A4	0.8
50	56	30.8	1.8	R50	T63B2	0.6
50	28	31.8	1.4	R40	T71A4	0.5
50	56	28.5	1	R40	T63B2	0.4
49	58	36.8	1.4	CB40	T63B2	0.7
48	59	39	4.6	CB70	T63B2	1.8
46	61	40.8	2.3	CB50	T63B2	1.2
44	20	40.7	3.9	R63	T71B6	1.4
44	20	40.2	2.1	R50	T71B6	0.9
44	20	38	1.1	R40	T71B6	0.6
41	68	42.6	1.3	CB40	T63B2	0.7
40	70	45.6	4.2	CB70	T63B2	1.8
40	70	36.1	1.4	R50	T63B2	0.6
40	70	31.4	0.7	R40	T63B2	0.3
39	73	41.4	2.2	CB50	T63B2	0.8
35	40	45.4	3.6	R70	T71A4	1.2
35	40	45.4	3.2	R63	T71A4	1.1
35	40	44.7	1.8	R50	T71A4	0.7
35	80	38.7	1.2	R50	T63B2	0.5
35	40	40.7	1	R40	T71A4	0.4
35	80	33.9	0.6	R40	T63B2	0.3
34	83	47.8	3.6	CB70	T63B2	1.3
34	83	45	1.1	CB40	T63B2	0.5
32	44	56.6	3.6	CB70	T71A4	1.6
31	28	51.7	3	R63	T71B6	1.1
31	28	50.9	1.8	R50	T71B6	0.7
31	28	48.6	1	R40	T71B6	0.5
31	90	51.1	1.8	CB50	T63B2	0.8
29	48	62.5	1.7	CB50	T71A4	1.1
29	97	54.3	1.8	CB50	T63B2	0.8
29	49	53.1	3.1	R70	T71A4	1.1
29	49	53.1	2.4	R63	T71A4	1
29	49	52.3	1.4	R50	T71A4	0.7
29	49	47.3	0.8	R40	T71A4	0.4
28	100	45.7	0.9	R50	T63B2	0.5
28	51	66.5	6.1	CB85	T71A4	2.2
28	51	65.6	3.1	CB70	T71A4	1.6
27	52	66.8	1.6	CB50	T71A4	1.1
26	109	58.0	0.9	CB40	T63B2	0.5

1.7 - *Gearmotors*

n_2 min^{-1}	ir	T2 Nm	FS'		0.25 kW	Ptn kW
26	110	63.3	5.3	CB85	T63B2	1.7
26	110	62.4	2.9	CB70	T63B2	1.3
25	56	58.8	2.8	R70	T71A4	1.0
25	56	58.8	2.2	R63	T71A4	0.9
25	56	56.9	1.2	R50	T71A4	0.6
25	56	51.1	0.7	R40	T71A4	0.4
25	114	63.6	1.5	CB50	T63B2	0.8
24	59	74.9	6.0	CB85	T71A4	2.2
24	59	74.0	3.2	CB70	T71A4	1.6
23	61	78.5	1.4	CB50	T71A4	1.1
22	127	66.7	0.8	CB40	T63B2	0.5
22	40	69.4	2.7	R70	T71B6	1.1
22	40	69.4	2.4	R63	T71B6	1.0
22	40	68.5	1.3	R50	T71B6	0.7
22	40	60.8	0.7	R40	T71B6	0.4
22	129	73.2	4.9	CB85	T63B2	1.7
22	130	72.7	2.6	CB70	T63B2	1.3
20	43	87.5	5.2	CB85	T71B6	2.2
20	69	87.7	5.2	CB85	T71A4	2.2
20	70	87.7	2.7	CB70	T71A4	1.6
20	70	67.6	2.2	R70	T71A4	0.9
20	70	68.8	1.7	R63	T71A4	0.8
20	70	66.4	1.0	R50	T71A4	0.6
20	44	88.4	2.6	CB70	T71B6	1.6
19.3	73	79.0	1.4	CB50	T71A4	0.7
18.3	48	97.8	1.1	CB50	T71B6	1.0
18.0	49	79.7	2.4	R70	T71B6	1.0
18.0	49	81.1	1.8	R63	T71B6	0.9
18.0	49	78.5	1.0	R50	T71B6	0.6
18.0	49	70.3	0.6	R40	T71B6	0.4
17.6	80	88.1	4.3	CB85	T71A4	1.5
17.6	80	73.1	1.9	R70	T71A4	0.8
17.6	80	74.5	1.5	R63	T71A4	0.8
17.6	80	69.0	0.8	R50	T71A4	0.5
17.3	51	101.1	4.9	CB85	T71B6	2.0
17.3	51	101.0	2.3	CB70	T71B6	1.5
17.0	166	84.4	2.3	CB70	T63B2	1.0
17.0	83	89.9	2.2	CB70	T71A4	1.2
16.9	52	104.6	1.1	CB50	T71B6	1.0
16.8	168	88.2	3.7	CB85	T63B2	1.4
16.6	170	83.3	1.0	CB50	T63B2	0.7
15.7	56	88.1	2.2	R70	T71B6	0.9
15.7	56	88.2	1.6	R63	T71B6	0.8
15.7	56	85.2	0.9	R50	T71B6	0.6
15.7	90	97.7	1.1	CB50	T71A4	0.7
14.9	59	116.8	4.3	CB85	T71B6	2.0
14.9	59	115.1	2.3	CB70	T71B6	1.5
14.5	97	101.9	1.1	CB50	T71A4	0.7
14.4	61	122.2	0.9	CB50	T71B6	1.0
14.2	199	97.7	0.9	CB50	T63B2	0.6
14.1	100	86.3	1.5	R70	T71A4	0.8
14.1	100	86.2	1.1	R63	T71A4	0.7
14.1	100	81.2	0.6	R50	T71A4	0.5
12.8	110	115.5	3.7	CB85	T71A4	1.5
12.8	110	115.4	2.0	CB70	T71A4	1.2
12.8	69	136.8	3.7	CB85	T71B6	2.0
12.6	70	136.7	1.9	CB70	T71B6	1.5
12.6	70	102.5	1.6	R70	T71B6	0.8
12.6	70	102.6	1.3	R63	T71B6	0.8
12.6	70	98.9	0.7	R50	T71B6	0.5
12.5	225	114.3	3.0	CB85	T63B2	1.4
12.4	228	110.0	1.9	CB70	T63B2	1.0
12.4	114	119.6	0.9	CB50	T71A4	0.7
12.1	73	122.8	0.9	CB50	T71B6	0.7
11.0	80	134.5	3.2	CB85	T71B6	1.5
11.0	80	108.4	1.5	R70	T71B6	0.8
11.0	80	110.7	1.1	R63	T71B6	0.7
11.0	80	101.9	0.6	R50	T71B6	0.5
10.9	129	135.4	3.2	CB85	T71A4	1.5
10.9	130	136.4	1.7	CB70	T71A4	1.2
10.8	262	97.7	0.6	CB50	T63B2	0.5
10.6	83	139.7	1.6	CB70	T71B6	1.2
10.1	140	139.8	3.6	40/85	T71A4	1.0
10.1	140	142.2	3.5	50/85	T71A4	1.5
10.1	140	142.2	3.5	63/85	T71A4	2.2
10.1	140	132.7	2.0	40/70	T71A4	1.0
10.1	140	135.2	2.0	63/70	T71A4	2.2
10.1	140	135.2	2.0	50/70	T71A4	1.5
10.1	140	135.2	1.8	40/63	T71A4	1.0
10.1	140	132.9	0.8	40/50	T71A4	1.0

1.7 - Getriebemotoren

n_2 min^{-1}	ir	T2 Nm	FS'		0.25 kW	Ptn kW
9.9	286	121.0	2.0	CB85	T63B2	1.1
9.8	90	144.0	0.8	CB50	T71B6	0.7
9.7	290	115.4	0.8	CB50	T63B2	0.6
9.6	295	117.3	1.2	CB70	T63B2	0.8
9.3	303	130.9	1.7	CB70	T63B2	0.8
9.1	97	155.4	0.7	CB50	T71B6	0.7
8.8	100	127.7	1.1	R70	T71B6	0.7
8.8	100	127.3	0.9	R63	T71B6	0.7
8.5	166	157.5	1.4	CB70	T71A4	1.0
8.4	168	165.1	2.3	CB85	T71A4	1.3
8.3	339	134.8	1.1	CB70	T63B2	0.8
8.3	170	152.4	0.7	CB50	T71A4	0.6
8.3	342	144.6	1.7	CB85	T63B2	1.1
8.0	110	176.0	2.7	CB85	T71B6	1.3
8.0	110	175.9	1.4	CB70	T71B6	1.0
7.7	114	182.1	0.6	CB50	T71B6	0.7
7.2	394	160.2	1.6	CB85	T63B2	1.0
7.2	394	153.5	1.0	CB70	T63B2	0.8
7.1	200	196.4	5.1	50/110	T71A4	1.4
7.1	200	199.8	5.0	63/110	T71A4	2.0
7.1	200	189.7	2.6	40/85	T71A4	0.9
7.1	200	192.9	2.6	50/85	T71A4	1.4
7.1	200	192.9	2.6	63/85	T71A4	2.0
7.1	200	183.1	1.6	40/70	T71A4	0.9
7.1	200	186.4	1.6	50/70	T71A4	1.4
7.1	200	189.8	1.5	63/70	T71A4	2.0
7.1	200	182.7	1.4	40/63	T71A4	0.9
7.1	200	179.7	0.6	40/50	T71A4	0.9
7.0	403	197.8	5.9	CB130	T63B2	2.7
6.8	129	206.5	2.3	CB85	T71B6	1.3
6.8	130	208.2	1.2	CB70	T71B6	1.0
6.3	225	209.5	2.1	CB85	T71A4	1.3
6.2	228	204.9	1.2	CB70	T71A4	1.0
6.1	460	179.1	1.5	CB85	T63B2	1.0
6.1	231	227.0	6.6	CB130	T71A4	2.7
6.1	464	176.7	0.9	CB70	T63B2	0.8
5.6	504	230.2	5.0	CB130	T63B2	2.4
5.4	162	259.5	5.9	CB130	T71B6	2.6
5.3	166	229.8	1.1	CB70	T71B6	0.8
5.2	168	237.2	2.0	CB85	T71B6	1.1
5.0	280	237.0	4.2	50/110	T71A4	1.4
5.0	280	241.5	4.1	63/110	T71A4	2.0
5.0	280	217.8	2.3	40/85	T71A4	0.9
5.0	280	222.8	2.2	63/85	T71A4	2.0
5.0	280	222.8	2.2	50/85	T71A4	1.4
5.0	280	217.7	1.3	40/70	T71A4	0.9
5.0	280	222.4	1.3	63/70	T71A4	2.0
5.0	280	222.4	1.3	50/70	T71A4	1.4
5.0	280	222.4	1.1	40/63	T71A4	0.9
4.9	286	212.9	1.3	CB85	T71A4	1.0
4.9	576	258.3	6.3	CB150	T63B2	3.2
4.9	288	277.6	5.6	CB130	T71A4	2.6
4.9	576	253.4	4.4	CB130	T63B2	2.3
4.8	295	215.0	0.8	CB70	T71A4	0.7
4.7	303	251.8	1.1	CB70	T71A4	0.7
4.6	618	225.5	0.7	CB70	T63B2	0.8
4.4	323	306.1	4.2	CB130	T71A4	2.5
4.4	202	317.6	5.1	CB130	T71B6	2.5
4.2	339	247.0	0.7	CB70	T71A4	0.7
4.1	342	254.5	1.1	CB85	T71A4	1.0
3.9	720	304.6	4.8	CB150	T63B2	3.0
3.9	720	292.3	3.3	CB130	T63B2	2.2
3.9	225	317.5	1.5	CB85	T71B6	1.1
3.9	228	309.4	0.9	CB70	T71B6	0.8
3.8	231	350.9	4.7	CB130	T71B6	2.4
3.6	394	280.4	1.1	CB85	T71A4	1.0
3.6	394	266.8	0.7	CB70	T71A4	0.7
3.5	400	345.9	5.2	63/130	T71A4	1.5
3.5	400	352.6	2.8	50/110	T71A4	1.0
3.5	400	352.6	2.8	63/110	T71A4	1.5
3.5	400	332.4	1.5	40/85	T71A4	0.6
3.5	400	346.3	1.4	50/85	T71A4	1.0
3.5	400	353.1	1.4	63/85	T71A4	1.5
3.5	400	318.7	1.0	40/70	T71A4	0.6
3.5	400	318.7	1.0	63/70	T71A4	1.5
3.5	400	332.0	1.0	50/70	T71A4	1.0
3.5	400	318.9	0.8	40/63	T71A4	0.6
3.5	403	381.9	5.8	CB150	T71A4	3.4
3.5	403	368.4	3.7	CB130	T71A4	2.4
3.1	286	326.2	0.9	CB85	T71B6	1.0

1.7 - Motoriduttori

n_2 min^{-1}	ir	T2 Nm	FS'		0.25 kW	Ptn kW
3.1	460	326.2	0.9	CB85	T71A4	1.0
3.1	288	444.8	6.1	CB150	T71B6	3.4
3.1	288	429.2	4.0	CB130	T71B6	2.3
2.9	303	387.7	0.7	CB70	T71B6	0.7
2.8	504	434.8	4.6	CB150	T71A4	3.0
2.8	504	426.3	3.2	CB130	T71A4	2.2
2.7	323	482.9	4.8	CB150	T71B6	3.3
2.7	323	465.4	3.1	CB130	T71B6	2.2
2.6	342	361.7	0.9	CB85	T71B6	0.9
2.5	576	487.3	3.9	CB150	T71A4	3.0
2.5	576	477.3	2.7	CB130	T71A4	2.2
2.4	600	518.0	5.9	CB180	T71A4	4.2
2.4	600	436.9	4.1	63/130	T71A4	1.7
2.4	600	447.2	2.2	63/110	T71A4	1.7
2.4	600	447.2	2.2	50/110	T71A4	1.2
2.4	600	405.8	1.2	40/85	T71A4	0.7
2.4	600	426.6	1.2	50/85	T71A4	1.2
2.4	600	426.6	1.2	63/85	T71A4	1.7
2.4	600	397.0	0.8	40/70	T71A4	0.7
2.4	600	415.8	0.8	50/70	T71A4	1.2
2.4	600	415.8	0.8	63/70	T71A4	1.7
2.4	600	395.6	0.6	40/63	T71A4	0.7
2.2	394	417.1	0.8	CB85	T71B6	0.9
2.2	403	591.3	4.1	CB150	T71B6	3.2
2.2	403	569.6	2.6	CB130	T71B6	2.2
2.1	420	625.3	6.4	CB180	T71B6	4.5
2.0	434	599.9	5.7	CB180	T71B6	4.2
2.0	720	560.4	3.0	CB150	T71A4	2.7
2.0	720	536.1	2.1	CB130	T71A4	2.0
1.9	460	486.6	0.7	CB85	T71B6	0.9
1.9	750	584.3	4.6	CB180	T71A4	3.8
1.8	504	668.2	3.2	CB150	T71B6	2.9
1.8	504	655.2	2.2	CB130	T71B6	2.0
1.7	525	710.5	5.0	CB180	T71B6	4.1
1.5	576	733.1	2.8	CB150	T71B6	2.8
1.5	576	733.2	1.9	CB130	T71B6	2.0
1.5	600	779.5	4.2	CB180	T71B6	3.9
1.4	980	696.6	2.6	70/130	T71A4	1.1
1.4	980	696.6	2.6	63/130	T71A4	1.0
1.4	980	679.3	1.5	50/110	T71A4	0.7
1.4	980	696.4	1.4	70/110	T71A4	1.1
1.4	980	696.4	1.4	63/110	T71A4	1.0
1.4	980	612.7	0.8	40/85	T71A4	0.4
1.4	980	679.3	0.7	50/85	T71A4	0.7
1.4	980	694.4	0.7	63/85	T71A4	1.0
1.4	980	694.4	0.7	70/85	T71A4	1.1
1.2	720	861.5	2.1	CB150	T71B6	2.6
1.2	720	821.5	1.5	CB130	T71B6	1.8
1.2	750	959.0	5.1	CB215	T71B6	4.7
1.2	750	897.7	3.3	CB180	T71B6	3.6
1.0	1372	810.8	2.2	70/130	T71A4	1.1
1.0	1372	810.8	2.2	63/130	T71A4	1.0
1.0	1372	788.6	1.3	50/110	T71A4	0.7
1.0	1372	811.7	1.2	70/110	T71A4	1.1
1.0	1372	811.7	1.2	63/110	T71A4	1.0
1.0	1372	672.0	0.7	40/85	T71A4	0.4
1.0	1372	739.6	0.7	50/85	T71A4	0.7
1.0	1372	766.9	0.7	63/85	T71A4	1.0
1.0	1372	766.9	0.7	70/85	T71A4	1.1
0.72	1960	1061	1.7	63/130	T71A4	1.0
0.72	1960	1061	1.7	70/130	T71A4	1.1
0.72	1960	1059	0.9	70/110	T71A4	1.1
0.72	1960	1059	0.9	50/110	T71A4	0.7
0.72	1960	1059	0.9	63/110	T71A4	1.0
0.50	2800	1289	1.4	70/130	T71A4	0.9
0.50	2800	1335	1.3	63/130	T71A4	0.8
0.50	2800	1289	0.8	50/110	T71A4	0.6
0.50	2800	1337	0.7	70/110	T71A4	0.9
0.50	2800	1337	0.7	63/110	T71A4	0.8
0.35	4000	1636	1.1	63/130	T71A4	0.7
0.35	4000	1636	1.1	70/130	T71A4	0.8
0.35	4000	1572	0.6	50/110	T71A4	0.5
0.35	4000	1634	0.6	70/110	T71A4	0.8
0.35	4000	1634	0.6	63/110	T71A4	0.7
0.25	5600	2202	0.8	63/130	T71A4	0.7
0.25	5600	2202	0.8	70/130	T71A4	0.8
0.20	7000	2388	0.7	63/130	T71A4	0.7
0.20	7000	2388	0.7	70/130	T71A4	0.8
0.18	8000	2649	0.6	63/130	T71A4	0.7
0.18	8000	2649	0.6	70/130	T71A4	0.8

1.7 - *Gearmotors*

n_2 min^{-1}	ir	T2 Nm	FS'		0.37 kW	Ptn kW
572	5	5.3	5.1	R40	T71A2	1.1
560	5	5.4	5.0	R40	T63C2	1.1
409	7	7.3	3.7	R40	T71A2	1.0
400	7	7.4	3.6	R40	T63C2	1.0
400	7	7.3	1.5	R28	T63C2	0.6
286	10	10.4	5.3	R50	T71A2	1.4
286	10	10.3	3.0	R40	T71A2	0.9
280	10	10.6	5.2	R50	T63C2	1.4
280	10	10.5	3.0	R40	T63C2	0.9
280	10	10.2	1.3	R28	T63C2	0.5
274	5	11.0	3.4	R40	T71B4	1.1
268	5	11.2	3.3	R40	T63D4	1.1
196	7	15.2	4.5	R50	T71B4	1.5
196	7	15.0	2.5	R40	T71B4	1.0
191	7	15.5	4.4	R50	T63D4	1.5
191	7	15.3	2.4	R40	T63D4	1.0
191	7	15.0	1.0	R28	T63D4	0.6
191	15	15.2	6.4	R63	T71A2	1.7
191	15	15.2	3.8	R50	T71A2	1.2
191	15	14.8	2.2	R40	T71A2	0.7
187	15	15.5	3.7	R50	T63C2	1.2
187	15	15.1	2.1	R40	T63C2	0.7
187	15	14.8	0.9	R28	T63C2	0.5
143	20	19.8	5.3	R63	T71A2	1.5
143	20	19.5	2.9	R50	T71A2	1.0
143	20	18.8	1.5	R40	T71A2	0.6
140	20	19.9	2.9	R50	T63C2	1.0
140	20	19.2	1.5	R40	T63C2	0.6
140	20	18.9	0.6	R28	T63C2	0.4
137	10	21.4	5.9	R63	T71B4	2.0
137	10	21.2	3.5	R50	T71B4	1.4
137	10	20.9	2.0	R40	T71B4	0.9
134	7	22.1	6.2	R63	T80A6	2.2
134	7	21.8	3.7	R50	T80A6	1.4
134	10	21.6	3.4	R50	T63D4	1.4
134	10	21.3	2.0	R40	T63D4	0.9
134	10	20.8	0.8	R28	T63D4	0.5
130	7	22.8	6.0	R63	T71C6	2.2
130	7	22.6	3.6	R50	T71C6	1.4
130	7	22.0	2.0	R40	T71C6	0.9
102	28	26.0	4.0	R63	T71A2	1.2
102	28	25.6	2.4	R50	T71A2	0.8
102	28	24.6	1.4	R40	T71A2	0.5
100	28	26.2	2.4	R50	T63C2	0.8
100	28	25.1	1.4	R40	T63C2	0.5
100	28	24.3	0.6	R28	T63C2	0.3
94	10	30.8	5.5	R70	T80A6	2.1
94	10	30.4	4.9	R63	T80A6	1.8
94	10	30.4	2.8	R50	T80A6	1.3
91	15	31.0	4.2	R63	T71B4	1.7
91	15	30.9	2.5	R50	T71B4	1.2
91	15	29.8	1.4	R40	T71B4	0.7
91	10	31.4	4.7	R63	T71C6	1.8
91	10	31.4	2.7	R50	T71C6	1.3
91	10	30.7	1.6	R40	T71C6	0.8
89	15	31.6	2.4	R50	T63D4	1.2
89	15	30.5	1.4	R40	T63D4	0.7
89	15	29.7	0.6	R28	T63D4	0.5
72	40	35.1	3.6	R70	T71A2	1.2
72	40	35.1	3.2	R63	T71A2	1.1
72	40	34.6	1.9	R50	T71A2	0.7
72	40	32.1	1.0	R40	T71A2	0.4
70	40	35.3	1.8	R50	T63C2	0.7
70	40	32.8	1.0	R40	T63C2	0.4
69	20	39.7	3.4	R63	T71B4	1.5
69	20	39.2	1.9	R50	T71B4	1.0
69	20	37.6	1.0	R40	T71B4	0.6
67	20	40.1	1.8	R50	T63D4	1.0
67	20	38.5	1.0	R40	T63D4	0.6
65	44	42.4	4.0	CB70	T71A2	1.8
64	44	43.3	3.9	CB70	T63C2	1.8
64	44	41.7	1.2	CB40	T63C2	0.7
63	15	44.0	3.9	R70	T80A6	1.7
63	15	44.0	3.5	R63	T80A6	1.6
63	15	44.6	2.0	R50	T80A6	1.2
61	15	45.4	3.4	R63	T71C6	1.6
61	15	46.0	1.9	R50	T71C6	1.2
61	15	43.7	1.1	R40	T71C6	0.7
60	48	46.8	1.9	CB50	T71A2	1.2
58	49	41.2	3.2	R70	T71A2	1.1
58	49	41.8	2.3	R63	T71A2	1.0
58	49	40.6	1.4	R50	T71A2	0.7
58	49	37.5	0.8	R40	T71A2	0.4
58	48	47.9	1.9	CB50	T63C2	1.2

1.7 - Getriebemotoren

n_2 min^{-1}	ir	T2 Nm	FS'		0.37 kW	Ptn kW
57	49	41.4	1.4	R50	T63C2	0.7
57	49	38.3	0.8	R40	T63C2	0.4
56	51	49.1	3.5	CB70	T71A2	1.8
56	50	47.3	1.0	CB40	T63C2	0.7
55	52	50.8	1.9	CB50	T71A2	1.2
55	51	50.9	6.5	CB85	T63C2	2.4
55	51	50.2	3.4	CB70	T63C2	1.8
54	52	51.8	1.8	CB50	T63C2	1.2
51	56	46.3	2.8	R70	T71A2	1.0
51	56	46.4	2.2	R63	T71A2	0.9
51	56	45.0	1.2	R50	T71A2	0.6
51	56	41.4	0.7	R40	T71A2	0.4
50	56	45.9	1.2	R50	T63C2	0.6
50	56	42.5	0.7	R40	T63C2	0.4
49	28	51.3	2.6	R63	T71B4	1.2
49	28	50.5	1.6	R50	T71B4	0.8
49	28	48.4	0.9	R40	T71B4	0.5
48	59	57.6	6.1	CB85	T71A2	2.4
48	59	56.9	3.2	CB70	T71A2	1.8
48	58	54.8	0.9	CB40	T63C2	0.7
48	28	51.7	1.5	R50	T63D4	0.8
48	28	49.4	0.9	R40	T63D4	0.5
47	59	58.8	6.0	CB85	T63C2	2.4
47	59	58.1	3.1	CB70	T63C2	1.8
47	20	56.4	3.1	R70	T80A6	1.5
47	20	56.4	2.8	R63	T80A6	1.4
47	20	55.6	1.5	R50	T80A6	0.9
47	61	59.6	1.6	CB50	T71A2	1.2
46	61	60.8	1.5	CB50	T63C2	1.2
46	20	58.2	2.7	R63	T71C6	1.4
46	20	57.4	1.5	R50	T71C6	0.9
46	20	54.3	0.8	R40	T71C6	0.6
41	69	66.5	5.7	CB85	T71A2	2.4
41	68	63.6	0.9	CB40	T63C2	0.7
41	70	66.6	2.9	CB70	T71A2	1.8
41	70	53.6	2.2	R70	T71A2	0.9
41	70	54.5	1.7	R63	T71A2	0.8
41	70	52.7	1.0	R50	T71A2	0.6
41	69	67.9	5.6	CB85	T63C2	2.4
40	70	68.0	2.8	CB70	T63C2	1.8
40	70	53.9	1.0	R50	T63C2	0.6
39	73	60.5	1.5	CB50	T71A2	0.8
38	73	61.7	1.5	CB50	T63C2	0.8
36	80	68.2	4.7	CB85	T71A2	1.7
36	80	59.3	1.9	R70	T71A2	0.8
36	80	60.3	1.5	R63	T71A2	0.8
36	80	56.3	0.8	R50	T71A2	0.5
35	80	69.7	4.6	CB85	T63C2	1.7
35	80	57.6	0.8	R50	T63C2	0.5
34	83	69.7	2.4	CB70	T71A2	1.3
34	40	69.1	2.3	R70	T71B4	1.2
34	40	69.1	2.1	R63	T71B4	1.1
34	40	68.1	1.2	R50	T71B4	0.7
34	40	61.9	0.6	R40	T71B4	0.4
34	83	71.2	2.4	CB70	T63C2	1.3
34	83	67.0	0.7	CB40	T63C2	0.5
34	28	71.6	2.4	R70	T80A6	1.2
34	28	71.6	2.2	R63	T80A6	1.1
34	28	70.5	1.3	R50	T80A6	0.7
34	40	69.5	1.2	R50	T63D4	0.7
34	40	63.2	0.6	R40	T63D4	0.4
33	28	73.9	2.1	R63	T71C6	1.1
33	28	72.9	1.3	R50	T71C6	0.7
33	28	69.5	0.7	R40	T71C6	0.5
32	43	85.4	4.7	CB85	T71B4	2.2
32	90	74.5	1.2	CB50	T71A2	0.8
31	43	87.3	4.6	CB85	T63D4	2.2
31	44	86.2	2.4	CB70	T71B4	1.6
31	90	76.2	1.2	CB50	T63C2	0.8
30	44	88.2	2.3	CB70	T63D4	1.6
30	44	84.6	0.7	CB40	T63D4	0.7
29	97	79.1	1.2	CB50	T71A2	0.8
29	97	80.8	1.2	CB50	T63C2	0.8
29	100	71.6	1.4	R70	T71A2	0.8
29	100	70.5	1.1	R63	T71A2	0.7
29	100	66.7	0.6	R50	T71A2	0.5
29	48	95.4	1.1	CB50	T71B4	1.1
28	100	68.2	0.6	R50	T63C2	0.5
28	49	80.9	2.1	R70	T71B4	1.1
28	49	80.9	1.5	R63	T71B4	1.0

1.7 - Motoriduttori

n_2 min^{-1}	ir	T2 Nm	FS'		0.37 kW	Ptn kW
28	49	79.5	0.9	R50	T71B4	0.7
28	48	97.6	1.1	CB50	T63D4	1.1
27	49	81.5	0.9	R50	T63D4	0.7
27	51	101.3	4.0	CB85	T71B4	2.2
27	51	99.9	2.1	CB70	T71B4	1.6
27	50	96.2	0.6	CB40	T63D4	0.7
26	52	101.9	1.1	CB50	T71B4	1.1
26	51	103.5	3.9	CB85	T63D4	2.2
26	51	102.2	2.0	CB70	T63D4	1.6
26	110	92.4	3.7	CB85	T71A2	1.7
26	110	91.1	2.0	CB70	T71A2	1.3
26	52	104.3	1.0	CB50	T63D4	1.1
26	109	86.7	0.6	CB40	T63C2	0.5
25	110	94.4	3.6	CB85	T63C2	1.7
25	110	93.0	1.9	CB70	T63C2	1.3
25	114	93.0	1.0	CB50	T71A2	0.8
25	114	94.9	1.0	CB50	T63C2	0.8
24	56	89.6	1.9	R70	T71B4	1.0
24	56	89.5	1.4	R63	T71B4	0.9
24	56	86.5	0.8	R50	T71B4	0.6
24	56	88.6	0.8	R50	T63D4	0.6
24	40	99.3	3.6	R85	T80A6	1.5
24	40	96.3	1.9	R70	T80A6	1.1
24	40	96.3	1.7	R63	T80A6	1.0
24	40	94.8	1.0	R50	T80A6	0.7
23	59	114.2	4.0	CB85	T71B4	2.2
23	59	112.6	2.1	CB70	T71B4	1.6
23	40	99.5	1.9	R70	T71C6	1.1
23	40	99.4	1.7	R63	T71C6	1.0
23	40	97.8	0.9	R50	T71C6	0.7
23	59	116.7	3.9	CB85	T63D4	2.2
23	59	115.1	2.0	CB70	T63D4	1.6
22	61	119.6	0.9	CB50	T71B4	1.1
22	129	106.8	3.4	CB85	T71A2	1.7
22	130	106.0	1.8	CB70	T71A2	1.3
22	61	122.2	0.9	CB50	T63D4	1.1
22	43	121.2	3.7	CB85	T80A6	2.2
22	129	109.1	3.3	CB85	T63C2	1.7
22	130	108.2	1.8	CB70	T63C2	1.3
21	44	122.5	1.9	CB70	T80A6	1.6
21	43	125.3	3.6	CB85	T71C6	2.2
21	44	126.4	1.9	CB70	T71C6	1.6
19.9	69	133.5	3.4	CB85	T71B4	2.2
19.6	70	133.6	1.8	CB70	T71B4	1.6
19.6	70	102.9	1.4	R70	T71B4	0.9
19.6	70	104.8	1.1	R63	T71B4	0.8
19.6	70	101.2	0.6	R50	T71B4	0.6
19.4	69	136.4	3.3	CB85	T63D4	2.2
19.2	49	114.2	2.9	R85	T80A6	1.3
19.2	49	110.5	1.7	R70	T80A6	1.0
19.2	49	112.3	1.3	R63	T80A6	0.9
19.2	49	108.7	0.8	R50	T80A6	0.6
19.1	70	136.6	1.7	CB70	T63D4	1.6
19.1	70	103.4	0.6	R50	T63D4	0.6
19.0	48	139.7	0.8	CB50	T71C6	1.0
18.8	73	120.4	0.9	CB50	T71B4	0.7
18.6	49	114.1	1.7	R70	T71C6	1.0
18.6	49	116.0	1.2	R63	T71C6	0.9
18.6	49	112.4	0.7	R50	T71C6	0.6
18.4	51	139.9	3.6	CB85	T80A6	2.0
18.4	51	139.9	1.7	CB70	T80A6	1.5
18.4	73	123.3	0.9	CB50	T63D4	0.7
17.8	51	144.6	3.5	CB85	T71C6	2.0
17.8	51	144.5	1.6	CB70	T71C6	1.5
17.5	52	149.6	0.7	CB50	T71C6	1.0
17.2	166	123.1	1.5	CB70	T71A2	1.0
17.1	80	134.1	2.8	CB85	T71B4	1.5
17.1	80	111.5	1.3	R70	T71B4	0.8
17.1	80	113.4	1.0	R63	T71B4	0.8
17.0	168	128.7	2.6	CB85	T71A2	1.4
16.9	166	125.8	1.5	CB70	T63C2	1.0
16.8	170	121.9	0.7	CB50	T71A2	0.7
16.8	56	130.5	2.5	R85	T80A6	1.3
16.8	56	122.1	1.6	R70	T80A6	0.9
16.8	56	121.9	1.2	R63	T80A6	0.8
16.8	56	117.8	0.7	R50	T80A6	0.6
16.8	80	137.1	2.8	CB85	T63D4	1.5
16.7	168	131.5	2.5	CB85	T63C2	1.4
16.5	83	136.9	1.5	CB70	T71B4	1.2
16.5	170	124.3	0.7	CB50	T63C2	0.7

1.7 - *Gearmotors*

n_2 min^{-1}	ir	T2 Nm	FS'		0.37 kW	Ptn kW
16.3	56	126.2	1.5	R70	T71C6	0.9
16.3	56	126.2	1.1	R63	T71C6	0.8
16.3	56	121.8	0.6	R50	T71C6	0.6
16.1	83	140.2	1.4	CB70	T63D4	1.2
15.9	59	164.1	6.0	CB110	T80A6	3.4
15.9	59	161.9	3.1	CB85	T80A6	2.0
15.9	59	159.8	1.6	CB70	T80A6	1.5
15.4	59	167.3	3.0	CB85	T71C6	2.0
15.4	59	164.9	1.6	CB70	T71C6	1.5
15.2	90	148.8	0.7	CB50	T71B4	0.7
14.9	61	175.4	0.6	CB50	T71C6	1.0
14.9	90	151.6	0.7	CB50	T63D4	0.7
14.4	199	142.7	0.6	CB50	T71A2	0.6
14.1	97	155.3	0.7	CB50	T71B4	0.7
13.8	97	158.4	0.7	CB50	T63D4	0.7
13.7	100	131.6	1.0	R70	T71B4	0.8
13.7	100	131.8	0.8	R63	T71B4	0.7
13.6	69	192.0	5.2	CB110	T80A6	3.4
13.6	69	189.4	2.6	CB85	T80A6	2.0
13.4	70	149.9	2.0	R85	T80A6	1.2
13.4	70	189.3	1.4	CB70	T80A6	1.5
13.4	70	142.1	1.2	R70	T80A6	0.8
13.4	70	142.2	0.9	R63	T80A6	0.8
13.2	69	195.6	2.6	CB85	T71C6	2.0
13.0	70	195.8	1.3	CB70	T71C6	1.5
13.0	70	146.8	1.2	R70	T71C6	0.8
13.0	70	146.9	0.9	R63	T71C6	0.8
12.7	225	166.7	2.1	CB85	T71A2	1.4
12.5	228	160.7	1.3	CB70	T71A2	1.0
12.5	73	175.4	0.6	CB50	T71C6	0.7
12.5	110	176.0	2.4	CB85	T71B4	1.5
12.5	110	176.1	1.3	CB70	T71B4	1.2
12.4	225	170.5	2.0	CB85	T63C2	1.4
12.3	228	164.1	1.3	CB70	T63C2	1.0
12.2	110	179.8	2.4	CB85	T63D4	1.5
12.2	110	179.9	1.3	CB70	T63D4	1.2
12.0	114	182.5	0.6	CB50	T71B4	0.7
11.8	80	198.5	4.5	CB110	T80A6	2.9
11.8	80	186.5	2.3	CB85	T80A6	1.5
11.8	80	162.4	1.7	R85	T80A6	1.1
11.8	80	150.3	1.1	R70	T80A6	0.8
11.8	80	153.4	0.8	R63	T80A6	0.7
11.4	80	192.6	2.2	CB85	T71C6	1.5
11.4	80	155.4	1.0	R70	T71C6	0.8
11.4	80	158.2	0.8	R63	T71C6	0.7
11.3	83	193.5	1.2	CB70	T80A6	1.2
11.0	83	199.9	1.1	CB70	T71C6	1.2
10.6	129	206.3	2.1	CB85	T71B4	1.5
10.5	130	207.8	1.1	CB70	T71B4	1.2
10.4	129	210.9	2.0	CB85	T63D4	1.5
10.3	130	212.5	1.1	CB70	T63D4	1.2
10.0	286	176.6	1.4	CB85	T71A2	1.1
9.9	288	217.1	6.2	CB130	T71A2	2.9
9.8	140	216.5	4.6	50/110	T71B4	1.5
9.8	140	216.5	4.6	63/110	T71B4	2.2
9.8	140	212.9	2.3	40/85	T71B4	1.0
9.8	140	216.6	2.3	50/85	T71B4	1.5
9.8	140	216.6	2.3	63/85	T71B4	2.2
9.8	286	180.5	1.3	CB85	T63C2	1.1
9.8	140	202.1	1.3	40/70	T71B4	1.0
9.8	140	205.9	1.3	50/70	T71B4	1.5
9.8	140	205.9	1.3	63/70	T71B4	2.2
9.8	140	205.7	1.2	40/63	T71B4	1.0
9.7	288	221.8	6.0	CB130	T63C2	2.9
9.7	295	171.3	0.8	CB70	T71A2	0.8
9.6	140	221.6	4.5	50/110	T63D4	1.5
9.6	140	217.9	2.3	40/85	T63D4	1.0
9.6	140	221.6	2.3	50/85	T63D4	1.5
9.6	140	206.8	1.3	40/70	T63D4	1.0
9.6	140	210.3	1.3	50/70	T63D4	1.5
9.6	140	210.7	1.1	40/63	T63D4	1.0
9.6	140	203.2	1.0	28/70	T63D4	0.6
9.6	140	207.0	1.0	28/63	T63D4	0.6
9.5	144	260.1	6.3	CB130	T71B4	3.7
9.5	295	175.3	0.8	CB70	T63C2	0.8
9.4	303	191.0	1.2	CB70	T71A2	0.8
9.4	100	188.1	1.3	R85	T80A6	1.0
9.4	100	176.4	0.8	R70	T80A6	0.7
9.4	100	176.3	0.6	R63	T80A6	0.7
9.3	144	265.7	6.1	CB130	T63D4	3.7

1.7 - Getriebemotoren

n_2 min^{-1}	ir	T2 Nm	FS'		0.37 kW	Ptn kW
9.2	303	195.1	1.1	CB70	T63C2	0.8
9.1	100	182.5	0.8	R70	T71C6	0.7
9.1	100	182.6	0.6	R63	T71C6	0.7
8.9	323	235.5	4.7	CB130	T71A2	2.7
8.7	323	240.4	4.6	CB130	T63C2	2.7
8.6	110	260.4	3.8	CB110	T80A6	2.4
8.6	110	244.0	2.0	CB85	T80A6	1.3
8.6	110	244.1	1.0	CB70	T80A6	1.0
8.5	162	258.9	5.4	CB130	T71B4	3.0
8.4	339	196.6	0.7	CB70	T71A2	0.8
8.4	342	211.6	1.1	CB85	T71A2	1.1
8.3	162	264.9	5.2	CB130	T63D4	3.0
8.3	110	251.9	1.9	CB85	T71C6	1.3
8.3	110	252.0	1.0	CB70	T71C6	1.0
8.3	339	201.1	0.7	CB70	T63C2	0.8
8.3	166	239.9	0.9	CB70	T71B4	1.0
8.2	342	215.6	1.1	CB85	T63C2	1.1
8.2	115	298.4	5.7	CB130	T80A6	3.4
8.2	168	251.7	1.5	CB85	T71B4	1.3
8.1	166	244.8	0.9	CB70	T63D4	1.0
8.0	168	256.6	1.5	CB85	T63D4	1.3
7.9	115	308.3	5.5	CB130	T71C6	3.4
7.3	129	305.3	3.3	CB110	T80A6	2.4
7.3	129	286.0	1.7	CB85	T80A6	1.3
7.3	394	233.5	1.1	CB85	T71A2	1.0
7.3	394	223.5	0.7	CB70	T71A2	0.8
7.2	130	288.3	0.9	CB70	T80A6	1.0
7.1	394	238.3	1.1	CB85	T63C2	1.0
7.1	394	229.0	0.7	CB70	T63C2	0.8
7.1	403	298.6	6.4	CB150	T71A2	3.7
7.1	403	288.6	4.0	CB130	T71A2	2.7
7.1	129	295.5	1.6	CB85	T71C6	1.3
7.0	130	297.4	0.9	CB70	T71C6	1.0
7.0	403	305.1	6.2	CB150	T63C2	3.7
7.0	403	294.9	3.9	CB130	T63C2	2.7
6.9	200	304.4	5.9	63/130	T71B4	2.0
6.9	200	299.1	3.3	50/110	T71B4	1.4
6.9	200	304.3	3.3	63/110	T71B4	2.0
6.9	200	289.1	1.7	40/85	T71B4	0.9
6.9	200	294.1	1.7	50/85	T71B4	1.4
6.9	200	294.1	1.7	63/85	T71B4	2.0
6.9	200	278.7	1.0	40/70	T71B4	0.9
6.9	200	283.9	1.0	50/70	T71B4	1.4
6.9	200	289.2	1.0	63/70	T71B4	2.0
6.9	200	278.6	0.9	40/63	T71B4	0.9
6.8	202	318.0	4.6	CB130	T71B4	2.9
6.7	200	305.8	3.3	50/110	T63D4	1.4
6.7	200	295.5	1.7	40/85	T63D4	0.9
6.7	200	300.8	1.7	50/85	T63D4	1.4
6.7	200	284.6	1.0	40/70	T63D4	0.9
6.7	200	290.0	1.0	50/70	T63D4	1.4
6.7	200	284.6	0.9	40/63	T63D4	0.9
6.7	200	279.3	0.8	28/70	T63D4	0.5
6.7	200	279.3	0.8	28/63	T63D4	0.5
6.6	202	325.1	4.5	CB130	T63D4	2.9
6.5	144	367.9	4.9	CB130	T80A6	3.3
6.3	144	380.2	4.7	CB130	T71C6	3.3
6.2	460	261.6	1.0	CB85	T71A2	1.0
6.2	464	258.0	0.6	CB70	T71A2	0.8
6.1	225	319.2	1.4	CB85	T71B4	1.3
6.1	460	266.6	1.0	CB85	T63C2	1.0
6.0	464	263.8	0.6	CB70	T63C2	0.8
6.0	228	311.4	0.8	CB70	T71B4	1.0
6.0	225	326.4	1.3	CB85	T63D4	1.3
5.9	231	357.5	6.6	CB150	T71B4	3.7
5.9	231	345.7	4.3	CB130	T71B4	2.7
5.9	228	319.0	0.8	CB70	T63D4	1.0
5.8	162	371.7	6.6	CB150	T80A6	3.8
5.8	231	365.5	6.4	CB150	T63D4	3.7
5.8	162	359.5	4.3	CB130	T80A6	2.6
5.8	231	353.4	4.2	CB130	T63D4	2.7
5.7	504	342.7	5.0	CB150	T71A2	3.3
5.7	504	336.7	3.4	CB130	T71A2	2.4
5.7	166	317.9	0.8	CB70	T80A6	0.8
5.6	162	383.5	6.4	CB150	T71C6	3.8
5.6	162	371.0	4.1	CB130	T71C6	2.6
5.6	168	353.3	2.8	CB110	T80A6	2.0
5.6	168	328.3	1.5	CB85	T80A6	1.1
5.6	504	349.5	4.9	CB150	T63C2	3.3
5.6	504	343.1	3.4	CB130	T63C2	2.4

1.7 - Motoriduttori

n_2 min^{-1}	ir	T2 Nm	FS'		0.37 kW	Ptn kW
5.5	166	329.2	0.8	CB70	T71C6	0.8
5.4	168	338.9	1.4	CB85	T71C6	1.1
5.0	576	376.7	4.3	CB150	T71A2	3.2
5.0	576	369.7	3.0	CB130	T71A2	2.3
4.9	280	368.6	4.3	63/130	T71B4	2.0
4.9	280	361.3	2.8	50/110	T71B4	1.4
4.9	280	368.5	2.7	63/110	T71B4	2.0
4.9	280	332.1	1.5	40/85	T71B4	0.9
4.9	280	339.4	1.5	50/85	T71B4	1.4
4.9	280	339.4	1.5	63/85	T71B4	2.0
4.9	280	332.2	0.9	40/70	T71B4	0.9
4.9	280	339.6	0.9	50/70	T71B4	1.4
4.9	280	339.6	0.9	63/70	T71B4	2.0
4.9	280	340.1	0.7	40/63	T71B4	0.9
4.9	576	385.2	4.2	CB150	T63C2	3.2
4.9	576	378.2	2.9	CB130	T63C2	2.3
4.8	280	368.9	2.7	50/110	T63D4	1.4
4.8	280	339.4	1.5	40/85	T63D4	0.9
4.8	280	346.4	1.4	50/85	T63D4	1.4
4.8	286	324.9	0.9	CB85	T71B4	1.0
4.8	280	339.6	0.9	40/70	T63D4	0.9
4.8	280	347.2	0.8	50/70	T63D4	1.4
4.8	280	332.0	0.8	28/70	T63D4	0.5
4.8	280	338.8	0.7	28/63	T63D4	0.5
4.8	280	346.4	0.7	40/63	T63D4	0.9
4.8	600	400.0	6.6	CB180	T71A2	4.4
4.8	288	438.0	5.6	CB150	T71B4	3.6
4.8	288	423.2	3.7	CB130	T71B4	2.6
4.7	286	331.1	0.8	CB85	T63D4	1.0
4.7	600	408.5	6.4	CB180	T63C2	4.4
4.7	202	455.8	5.6	CB150	T80A6	3.7
4.7	288	448.4	5.5	CB150	T63D4	3.6
4.7	202	440.8	3.6	CB130	T80A6	2.5
4.7	288	433.0	3.6	CB130	T63D4	2.6
4.5	303	382.5	0.7	CB70	T71B4	0.7
4.5	202	471.2	5.4	CB150	T71C6	3.7
4.5	202	455.3	3.5	CB130	T71C6	2.5
4.4	303	391.3	0.7	CB70	T63D4	0.7
4.2	323	483.3	4.4	CB150	T71B4	3.5
4.2	323	466.6	2.8	CB130	T71B4	2.5
4.2	225	473.3	2.1	CB110	T80A6	2.0
4.2	225	439.6	1.1	CB85	T80A6	1.1
4.2	323	494.0	4.3	CB150	T63D4	3.5
4.2	323	476.8	2.7	CB130	T63D4	2.5
4.1	228	429.1	0.6	CB70	T80A6	0.8
4.1	231	503.5	5.1	CB150	T80A6	3.5
4.1	231	486.1	3.4	CB130	T80A6	2.4
4.0	225	455.4	1.1	CB85	T71C6	1.1
4.0	342	387.9	0.7	CB85	T71B4	1.0
4.0	228	442.1	0.6	CB70	T71C6	0.8
4.0	720	445.2	3.3	CB150	T71A2	3.0
4.0	720	427.5	2.3	CB130	T71A2	2.2
3.9	231	520.2	5.0	CB150	T71C6	3.5
3.9	231	502.2	3.3	CB130	T71C6	2.4
3.9	342	396.8	0.7	CB85	T63D4	1.0
3.9	720	454.2	3.2	CB150	T63C2	3.0
3.9	720	435.8	2.2	CB130	T63C2	2.2
3.8	750	463.6	5.0	CB180	T71A2	4.1
3.7	750	473.8	4.9	CB180	T63C2	4.1
3.5	261	577.1	6.5	CB180	T71C6	4.7
3.5	394	426.1	0.7	CB85	T71B4	1.0
3.4	400	526.9	3.4	63/130	T71B4	1.5
3.4	400	537.0	1.9	63/110	T71B4	1.5
3.4	400	537.0	1.9	50/110	T71B4	1.0
3.4	400	506.8	1.0	40/85	T71B4	0.6
3.4	400	527.1	0.9	50/85	T71B4	1.0
3.4	400	537.8	0.9	63/85	T71B4	1.5
3.4	400	485.2	0.7	40/70	T71B4	0.6
3.4	400	485.2	0.7	63/70	T71B4	1.5
3.4	400	506.0	0.6	50/70	T71B4	1.0
3.4	403	582.0	3.8	CB150	T71B4	3.4
3.4	403	561.0	2.4	CB130	T71B4	2.4
3.4	394	436.0	0.7	CB85	T63D4	1.0
3.4	400	548.1	1.8	50/110	T63D4	1.0
3.4	400	516.8	1.0	40/85	T63D4	0.6
3.4	400	537.8	0.9	50/85	T63D4	1.0
3.4	400	495.4	0.6	40/70	T63D4	0.6
3.4	400	517.0	0.6	50/70	T63D4	1.0
3.3	403	594.3	3.7	CB150	T63D4	3.4
3.3	403	573.1	2.4	CB130	T63D4	2.4

1.7 - *Gearmotors*

n_2 min^{-1}	ir	T2 Nm	FS'		0.37 kW	Ptn kW
3.3	286	515.3	1.2	CB110	T80A6	1.8
3.3	286	451.7	0.7	CB85	T80A6	1.0
3.3	420	617.7	5.9	CB180	T71B4	4.7
3.3	288	617.8	4.4	CB150	T80A6	3.4
3.3	288	596.4	2.9	CB130	T80A6	2.3
3.2	420	631.3	5.8	CB180	T63D4	4.7
3.2	286	466.7	0.7	CB85	T71C6	1.0
3.2	434	592.6	5.3	CB180	T71B4	4.3
3.2	288	637.4	4.3	CB150	T71C6	3.4
3.2	288	614.9	2.8	CB130	T71C6	2.3
3.1	304	640.4	6.0	CB180	T80A6	4.6
3.1	434	606.2	5.2	CB180	T63D4	4.3
3.0	304	661.7	5.8	CB180	T71C6	4.6
3.0	460	497.7	0.6	CB85	T71B4	1.0
2.9	323	668.0	3.5	CB150	T80A6	3.3
2.9	323	643.4	2.2	CB130	T80A6	2.2
2.8	323	688.9	3.4	CB150	T71C6	3.3
2.8	323	664.5	2.1	CB130	T71C6	2.2
2.8	342	539.2	1.2	CB110	T80A6	1.6
2.8	342	502.0	0.7	CB85	T80A6	0.9
2.7	504	662.6	3.0	CB150	T71B4	3.0
2.7	504	649.8	2.1	CB130	T71B4	2.2
2.7	504	677.3	2.9	CB150	T63D4	3.0
2.7	504	664.5	2.0	CB130	T63D4	2.2
2.7	342	517.1	0.6	CB85	T71C6	0.9
2.6	525	704.1	4.6	CB180	T71B4	4.3
2.6	368	762.2	5.3	CB180	T80A6	4.5
2.6	525	720.5	4.5	CB180	T63D4	4.3
2.5	368	786.9	5.1	CB180	T71C6	4.5
2.4	394	621.4	1.0	CB110	T80A6	1.6
2.4	576	742.0	2.5	CB150	T71B4	3.0
2.4	576	726.9	1.8	CB130	T71B4	2.2
2.3	403	819.1	3.0	CB150	T80A6	3.2
2.3	576	758.2	2.5	CB150	T63D4	3.0
2.3	403	788.7	1.9	CB130	T80A6	2.2
2.3	576	742.9	1.7	CB130	T63D4	2.2
2.3	600	759.2	6.3	CB215	T71B4	4.9
2.3	600	790.4	3.9	CB180	T71B4	4.2
2.3	600	666.7	2.7	63/130	T71B4	1.7
2.3	600	681.4	1.5	63/110	T71B4	1.7
2.3	600	681.4	1.5	50/110	T71B4	1.2
2.3	600	620.8	0.8	40/85	T71B4	0.7
2.3	600	651.4	0.8	63/85	T71B4	1.7
2.3	600	651.4	0.8	50/85	T71B4	1.2
2.3	403	844.6	2.9	CB150	T71C6	3.2
2.3	403	813.1	1.8	CB130	T71C6	2.2
2.2	420	867.6	4.6	CB180	T80A6	4.5
2.2	600	776.5	6.2	CB215	T63D4	4.9
2.2	600	807.9	3.8	CB180	T63D4	4.2
2.2	600	696.8	1.4	50/110	T63D4	1.2
2.2	600	633.6	0.8	40/85	T63D4	0.7
2.2	600	665.5	0.8	50/85	T63D4	1.2
2.2	428	867.3	6.4	CB215	T80A6	5.4
2.2	420	895.6	4.4	CB180	T71C6	4.5
2.2	434	830.3	4.1	CB180	T80A6	4.2
2.1	428	895.6	6.2	CB215	T71C6	5.4
2.1	434	858.4	4.0	CB180	T71C6	4.2
2.0	460	726.6	0.9	CB110	T80A6	1.6
1.9	720	855.7	2.0	CB150	T71B4	2.7
1.9	720	818.7	1.4	CB130	T71B4	2.0
1.9	504	926.1	2.3	CB150	T80A6	2.9
1.9	504	906.4	1.6	CB130	T80A6	2.0
1.9	720	873.7	1.9	CB150	T63D4	2.7
1.9	720	835.3	1.3	CB130	T63D4	2.0
1.8	750	946.0	4.8	CB215	T71B4	4.9
1.8	750	888.5	3.0	CB180	T71B4	3.8
1.8	518	1035	5.6	CB215	T80A6	5.3
1.8	504	957.0	2.3	CB150	T71C6	2.9
1.8	504	937.8	1.6	CB130	T71C6	2.0
1.8	750	967.3	4.7	CB215	T63D4	4.9
1.8	525	986.9	3.6	CB180	T80A6	4.1
1.8	750	907.9	3.0	CB180	T63D4	3.8
1.8	518	1064	5.4	CB215	T71C6	5.3
1.7	525	1021	3.5	CB180	T71C6	4.1
1.6	576	1019	2.0	CB150	T80A6	2.8
1.6	576	1019	1.4	CB130	T80A6	2.0
1.6	576	1052	1.9	CB150	T71C6	2.8
1.6	576	1052	1.3	CB130	T71C6	2.0
1.6	600	1058	5.0	CB215	T80A6	4.7
1.6	600	1080	3.1	CB180	T80A6	3.9

1.7 - Getriebemotoren

n_2 min^{-1}	ir	T2 Nm	FS'		0.37 kW	Ptn kW
1.5	600	1092	4.8	CB215	T71C6	4.7
1.5	600	1116	3.0	CB180	T71C6	3.9
1.4	980	1061	1.7	63/130	T71B4	1.0
1.4	980	1061	1.7	70/130	T71B4	1.1
1.4	980	1034	1.0	50/110	T71B4	0.7
1.4	980	1060	0.9	70/110	T71B4	1.1
1.4	980	1060	0.9	63/110	T71B4	1.0
1.4	980	1057	0.9	50/110	T63D4	0.7
1.3	710	1258	5.8	CB250	T80A6	7.2
1.3	720	1188	1.5	CB150	T80A6	2.6
1.3	720	1133	1.1	CB130	T80A6	1.8
1.3	710	1298	5.6	CB250	T71C6	7.2
1.3	720	1233	1.5	CB150	T71C6	2.6
1.3	720	1177	1.0	CB130	T71C6	1.8
1.3	750	1329	3.7	CB215	T80A6	4.7
1.3	750	1244	2.4	CB180	T80A6	3.6
1.2	750	1372	3.6	CB215	T71C6	4.7
1.2	750	1285	2.3	CB180	T71C6	3.6
1.0	1372	1236	1.5	70/130	T71B4	1.1
1.0	1372	1236	1.5	63/130	T71B4	1.0
1.0	1372	1201	0.8	50/110	T71B4	0.7
1.0	1372	1238	0.8	63/110	T71B4	1.0
1.0	1372	1238	0.8	70/110	T71B4	1.1
0.98	1372	1225	0.8	50/110	T63D4	0.7
0.70	1960	1617	1.1	63/130	T71B4	1.0
0.70	1960	1617	1.1	70/130	T71B4	1.1
0.70	1960	1616	0.6	63/110	T71B4	1.0
0.70	1960	1616	0.6	70/110	T71B4	1.1
0.70	1960	1616	0.6	50/110	T71B4	0.7
0.68	1960	1659	0.6	50/110	T63D4	0.7
0.49	2800	1947	0.9	70/130	T71B4	0.9
0.49	2800	2018	0.9	63/130	T71B4	0.8
0.34	4000	2494	0.7	70/130	T71B4	0.8
0.34	4000	2494	0.7	63/130	T71B4	0.7

1.7 - Motoriduttori

n_2 min^{-1}	ir	T2 Nm	FS'		0.55 kW	Ptn kW
572	5	7.9	3.4	R40	T71B2	1.1
409	7	10.9	4.6	R50	T71B2	1.5
409	7	10.8	2.5	R40	T71B2	1.0
286	10	15.4	6.0	R63	T71B2	2.0
286	10	15.4	3.6	R50	T71B2	1.4
286	10	15.2	2.0	R40	T71B2	0.9
280	5	16.0	2.3	R40	T71C4	1.1
204	7	21.9	6.0	R70	T80A4	2.5
204	7	21.6	5.3	R63	T80A4	2.2
204	7	21.6	3.1	R50	T80A4	1.5
200	7	22.1	5.2	R63	T71C4	2.2
200	7	22.1	3.1	R50	T71C4	1.5
200	7	21.8	1.7	R40	T71C4	1.0
191	15	22.6	4.3	R63	T71B2	1.7
191	15	22.6	2.6	R50	T71B2	1.2
191	15	22.0	1.5	R40	T71B2	0.7
143	10	30.5	4.7	R70	T80A4	2.2
143	10	30.5	4.1	R63	T80A4	2.0
143	20	29.4	3.5	R63	T71B2	1.5
143	10	30.1	2.4	R50	T80A4	1.4
143	20	29.0	2.0	R50	T71B2	1.0
143	20	27.9	1.0	R40	T71B2	0.6
140	10	31.1	4.0	R63	T71C4	2.0
140	10	30.8	2.4	R50	T71C4	1.4
140	10	30.4	1.4	R40	T71C4	0.9
133	7	33.2	4.8	R70	T80B6	2.4
133	7	33.2	4.1	R63	T80B6	2.2
133	7	32.8	2.5	R50	T80B6	1.4
102	28	38.6	2.7	R63	T71B2	1.2
102	28	38.1	1.6	R50	T71B2	0.8
102	28	36.5	0.9	R40	T71B2	0.5
95	15	44.1	3.3	R70	T80A4	1.9
95	15	44.1	3.0	R63	T80A4	1.7
95	15	44.1	1.7	R50	T80A4	1.2
93	15	45.0	2.9	R63	T71C4	1.7
93	15	45.0	1.7	R50	T71C4	1.2
93	15	43.3	1.0	R40	T71C4	0.7
93	10	46.3	3.6	R70	T80B6	2.1
93	10	45.8	3.3	R63	T80B6	1.8
93	10	45.7	1.9	R50	T80B6	1.3
72	20	56.6	2.7	R70	T80A4	1.7
72	40	52.1	2.4	R70	T71B2	1.2
72	20	56.6	2.4	R63	T80A4	1.5
72	40	52.1	2.2	R63	T71B2	1.1
72	20	55.8	1.3	R50	T80A4	1.0
72	40	51.4	1.2	R50	T71B2	0.7
72	40	47.7	0.7	R40	T71B2	0.4
70	20	57.8	2.4	R63	T71C4	1.5
70	20	57.0	1.3	R50	T71C4	1.0
70	20	54.7	0.7	R40	T71C4	0.6
67	43	62.4	5.3	CB85	T71B2	2.4
65	44	63.0	2.7	CB70	T71B2	1.8
62	15	66.1	2.6	R70	T80B6	1.7
62	15	66.1	2.3	R63	T80B6	1.6
62	15	67.0	1.3	R50	T80B6	1.2
60	48	69.6	1.3	CB50	T71B2	1.2
58	49	61.2	2.1	R70	T71B2	1.1
58	49	62.1	1.6	R63	T71B2	1.0
58	49	60.3	0.9	R50	T71B2	0.7
56	51	74.0	4.5	CB85	T71B2	2.4
56	51	73.0	2.3	CB70	T71B2	1.8
55	52	75.5	1.2	CB50	T71B2	1.2
51	28	73.0	2.0	R70	T80A4	1.3
51	56	68.9	1.9	R70	T71B2	1.0
51	28	73.0	1.8	R63	T80A4	1.2
51	56	68.9	1.5	R63	T71B2	0.9
51	28	72.0	1.1	R50	T80A4	0.8
51	56	66.9	0.8	R50	T71B2	0.6
50	28	74.5	1.8	R63	T71C4	1.2
50	28	73.6	1.1	R50	T71C4	0.8
50	28	70.4	0.6	R40	T71C4	0.5
48	59	85.6	4.1	CB85	T71B2	2.4
48	59	84.5	2.1	CB70	T71B2	1.8
47	61	88.5	1.1	CB50	T71B2	1.2
47	20	84.7	2.1	R70	T80B6	1.5
47	20	84.7	1.9	R63	T80B6	1.4
47	20	83.6	1.0	R50	T80B6	0.9
41	69	98.8	3.8	CB85	T71B2	2.4
41	70	99.0	1.9	CB70	T71B2	1.8
41	70	79.7	1.5	R70	T71B2	0.9
41	70	81.0	1.2	R63	T71B2	0.8
41	70	78.4	0.7	R50	T71B2	0.6

1.7 - *Gearmotors*

n_2 min^{-1}	ir	T2 Nm	FS'		0.55 kW	Ptn kW
39	73	89.9	1.0	CB50	T71B2	0.8
36	80	101.4	3.1	CB85	T71B2	1.7
36	40	101.4	3.1	R85	T80A4	1.6
36	40	98.5	1.6	R70	T80A4	1.2
36	40	98.5	1.5	R63	T80A4	1.1
36	80	88.2	1.3	R70	T71B2	0.8
36	80	89.6	1.0	R63	T71B2	0.8
36	40	97.1	0.8	R50	T80A4	0.7
35	40	100.6	1.6	R70	T71C4	1.2
35	40	100.6	1.4	R63	T71C4	1.1
35	40	99.0	0.8	R50	T71C4	0.7
34	83	103.7	1.6	CB70	T71B2	1.3
33	43	123.2	6.2	CB110	T80A4	3.8
33	43	121.6	3.3	CB85	T80A4	2.2
33	28	107.6	1.6	R70	T80B6	1.2
33	28	107.5	1.5	R63	T80B6	1.1
33	28	105.9	0.9	R50	T80B6	0.7
33	43	124.2	3.2	CB85	T71C4	2.2
33	44	122.8	1.7	CB70	T80A4	1.6
32	44	125.4	1.6	CB70	T71C4	1.6
32	90	110.7	0.8	CB50	T71B2	0.8
29	97	117.5	0.8	CB50	T71B2	0.8
29	49	117.0	2.5	R85	T80A4	1.6
29	49	115.1	1.4	R70	T80A4	1.1
29	49	115.2	1.1	R63	T80A4	1.0
29	49	113.5	0.6	R50	T80A4	0.7
29	48	138.8	0.8	CB50	T71C4	1.1
29	100	106.5	1.0	R70	T71B2	0.8
29	100	104.8	0.8	R63	T71B2	0.7
29	49	117.7	1.4	R70	T71C4	1.1
29	49	117.7	1.1	R63	T71C4	1.0
29	49	115.8	0.6	R50	T71C4	0.7
28	51	146.1	5.3	CB110	T80A4	3.8
28	51	144.2	2.8	CB85	T80A4	2.2
28	51	142.4	1.4	CB70	T80A4	1.6
27	51	147.4	2.7	CB85	T71C4	2.2
27	51	145.5	1.4	CB70	T71C4	1.6
27	52	148.1	0.7	CB50	T71C4	1.1
26	110	137.4	2.5	CB85	T71B2	1.7
26	110	135.4	1.3	CB70	T71B2	1.3
26	56	135.7	2.1	R85	T80A4	1.6
26	56	127.6	1.3	R70	T80A4	1.0
26	56	127.5	1.0	R63	T80A4	0.9
25	114	138.2	0.7	CB50	T71B2	0.8
25	56	130.3	1.3	R70	T71C4	1.0
25	56	130.3	1.0	R63	T71C4	0.9
24	59	164.7	5.3	CB110	T80A4	3.8
24	59	162.5	2.8	CB85	T80A4	2.2
24	59	160.3	1.5	CB70	T80A4	1.6
24	59	166.0	2.7	CB85	T71C4	2.2
24	59	163.7	1.4	CB70	T71C4	1.6
23	40	149.1	2.4	R85	T80B6	1.5
23	40	144.5	1.3	R70	T80B6	1.1
23	40	144.7	1.1	R63	T80B6	1.0
23	40	142.1	0.6	R50	T80B6	0.7
23	61	174.2	0.6	CB50	T71C4	1.1
22	129	158.8	2.3	CB85	T71B2	1.7
22	130	157.5	1.2	CB70	T71B2	1.3
22	43	184.5	4.8	CB110	T80B6	3.8
22	43	182.1	2.5	CB85	T80B6	2.2
21	44	183.9	1.3	CB70	T80B6	1.6
21	69	192.7	4.6	CB110	T80A4	3.8
21	69	190.1	2.4	CB85	T80A4	2.2
20	70	156.9	1.7	R85	T80A4	1.3
20	70	190.4	1.2	CB70	T80A4	1.6
20	70	146.6	1.0	R70	T80A4	0.9
20	70	149.0	0.8	R63	T80A4	0.8
20	69	194.2	2.3	CB85	T71C4	2.2
20	70	194.4	1.2	CB70	T71C4	1.6
20	70	149.8	1.0	R70	T71C4	0.9
20	70	152.5	0.8	R63	T71C4	0.8
19.2	73	175.3	0.6	CB50	T71C4	0.7
19.0	49	171.5	1.9	R85	T80B6	1.3
19.0	49	166.1	1.1	R70	T80B6	1.0
19.0	49	168.7	0.8	R63	T80B6	0.9
18.2	51	213.1	4.6	CB110	T80B6	3.4
18.2	51	210.2	2.4	CB85	T80B6	2.0
18.2	51	210.3	1.1	CB70	T80B6	1.5
17.9	80	202.7	3.9	CB110	T80A4	2.9
17.9	80	191.0	2.0	CB85	T80A4	1.5

1.7 - Getriebemotoren

n_2 min^{-1}	ir	T2 Nm	FS'		0.55 kW	Ptn kW
17.9	80	170.5	1.4	R85	T80A4	1.2
17.9	80	158.6	0.9	R70	T80A4	0.8
17.9	80	161.8	0.7	R63	T80A4	0.8
17.7	162	193.4	6.0	CB130	T71B2	3.2
17.5	80	195.1	2.0	CB85	T71C4	1.5
17.5	80	162.2	0.9	R70	T71C4	0.8
17.5	80	165.3	0.7	R63	T71C4	0.8
17.2	166	183.0	1.0	CB70	T71B2	1.0
17.2	83	195.3	1.0	CB70	T80A4	1.2
17.0	168	191.3	1.7	CB85	T71B2	1.4
16.9	83	199.1	1.0	CB70	T71C4	1.2
16.8	85	224.8	6.4	CB130	T80A4	4.0
16.6	56	196.1	1.6	R85	T80B6	1.3
16.6	56	183.3	1.0	R70	T80B6	0.9
16.6	56	183.3	0.8	R63	T80B6	0.8
16.5	85	229.6	6.3	CB130	T71C4	4.0
16.0	58	249.0	6.5	CB130	T80B6	4.3
15.8	59	246.6	4.0	CB110	T80B6	3.4
15.8	59	243.4	2.1	CB85	T80B6	2.0
15.8	59	239.9	1.1	CB70	T80B6	1.5
14.3	100	194.7	1.1	R85	T80A4	1.1
14.3	100	187.2	0.7	R70	T80A4	0.8
14.2	202	237.4	5.2	CB130	T71B2	3.1
14.0	100	191.3	0.7	R70	T71C4	0.8
13.5	69	288.4	3.4	CB110	T80B6	3.4
13.5	69	284.4	1.8	CB85	T80B6	2.0
13.3	70	225.3	1.3	R85	T80B6	1.2
13.3	70	284.7	0.9	CB70	T80B6	1.5
13.3	70	213.2	0.8	R70	T80B6	0.8
13.3	70	213.3	0.6	R63	T80B6	0.8
13.0	110	266.7	3.4	CB110	T80A4	2.9
13.0	110	250.6	1.7	CB85	T80A4	1.5
13.0	110	250.3	0.9	CB70	T80A4	1.2
12.9	72	304.9	5.6	CB130	T80B6	4.2
12.7	110	255.7	1.7	CB85	T71C4	1.5
12.7	110	255.9	0.9	CB70	T71C4	1.2
12.7	225	247.9	1.4	CB85	T71B2	1.4
12.5	228	238.9	0.9	CB70	T71B2	1.0
12.4	115	300.0	5.2	CB130	T80A4	3.9
12.4	231	263.0	4.8	CB130	T71B2	3.0
12.2	115	306.5	5.1	CB130	T71C4	3.9
11.6	80	298.2	3.0	CB110	T80B6	2.9
11.6	80	280.2	1.5	CB85	T80B6	1.5
11.6	80	244.1	1.1	R85	T80B6	1.1
11.6	80	226.2	0.7	R70	T80B6	0.8
11.2	83	291.0	0.8	CB70	T80B6	1.2
11.1	129	312.6	2.9	CB110	T80A4	2.9
11.1	129	293.7	1.5	CB85	T80A4	1.5
11.0	130	295.8	0.8	CB70	T80A4	1.2
10.9	85	336.0	4.8	CB130	T80B6	3.5
10.9	129	300.1	1.4	CB85	T71C4	1.5
10.8	130	302.2	0.8	CB70	T71C4	1.2
10.2	140	313.9	5.3	63/130	T80A4	2.2
10.2	140	319.0	5.2	70/130	T80A4	2.5
10.2	140	308.6	3.2	63/110	T80A4	2.2
10.2	140	308.6	3.2	50/110	T80A4	1.5
10.2	140	313.7	3.2	70/110	T80A4	2.5
10.2	140	308.6	1.6	63/85	T80A4	2.2
10.2	140	308.6	1.6	70/85	T80A4	2.5
10.2	140	308.6	1.6	50/85	T80A4	1.5
10.2	140	293.2	0.9	63/70	T80A4	2.2
10.2	140	293.2	0.9	50/70	T80A4	1.5
10.0	140	320.4	5.2	63/130	T71C4	2.2
10.0	140	315.2	3.2	63/110	T71C4	2.2
10.0	140	315.2	3.2	50/110	T71C4	1.5
10.0	140	310.0	1.6	40/85	T71C4	1.0
10.0	140	315.0	1.6	63/85	T71C4	2.2
10.0	140	315.0	1.6	50/85	T71C4	1.5
10.0	286	262.6	0.9	CB85	T71B2	1.1
10.0	140	294.4	0.9	40/70	T71C4	1.0
10.0	140	299.2	0.9	63/70	T71C4	2.2
10.0	140	299.2	0.9	50/70	T71C4	1.5
10.0	140	299.5	0.8	40/63	T71C4	1.0
9.9	288	328.0	6.4	CB150	T71B2	3.9
9.9	144	370.2	4.4	CB130	T80A4	3.7
9.9	288	322.7	4.1	CB130	T71B2	2.9
9.7	144	378.3	4.3	CB130	T71C4	3.7
9.4	303	283.9	0.8	CB70	T71B2	0.8
9.3	100	282.6	0.9	R85	T80B6	1.0
8.9	323	362.0	5.0	CB150	T71B2	3.8

1.7 - Motoriduttori

n_2 min^{-1}	ir	T2 Nm	FS'		0.55 kW	Ptn kW
8.9	323	350.1	3.1	CB130	T71B2	2.7
8.8	162	374.8	5.9	CB150	T80A4	4.0
8.8	162	368.9	3.8	CB130	T80A4	3.0
8.6	162	383.0	5.8	CB150	T71C4	4.0
8.6	162	376.9	3.7	CB130	T71C4	3.0
8.6	166	341.6	0.7	CB70	T80A4	1.0
8.5	168	382.6	2.1	CB110	T80A4	2.3
8.5	168	357.7	1.1	CB85	T80A4	1.3
8.5	110	391.7	2.6	CB110	T80B6	2.4
8.5	110	366.7	1.3	CB85	T80B6	1.3
8.5	110	366.7	0.7	CB70	T80B6	1.0
8.4	166	348.4	0.6	CB70	T71C4	1.0
8.4	342	314.5	0.8	CB85	T71B2	1.1
8.3	168	365.7	1.1	CB85	T71C4	1.3
8.1	115	454.4	6.0	CB150	T80B6	4.9
8.1	115	448.0	3.8	CB130	T80B6	3.4
7.3	394	347.2	0.7	CB85	T71B2	1.0
7.2	129	459.1	2.2	CB110	T80B6	2.4
7.2	129	430.0	1.1	CB85	T80B6	1.3
7.2	200	433.5	4.2	63/130	T80A4	2.0
7.2	200	433.5	4.2	70/130	T80A4	2.2
7.2	200	426.0	2.3	50/110	T80A4	1.4
7.2	200	433.4	2.3	63/110	T80A4	2.0
7.2	200	433.4	2.3	70/110	T80A4	2.2
7.2	200	418.6	1.2	70/85	T80A4	2.2
7.2	200	418.6	1.2	63/85	T80A4	2.0
7.2	200	418.6	1.2	50/85	T80A4	1.4
7.2	200	403.8	0.7	50/70	T80A4	1.4
7.2	200	411.1	0.7	63/70	T80A4	2.0
7.1	403	443.9	4.3	CB150	T71B2	3.7
7.1	403	429.0	2.7	CB130	T71B2	2.7
7.1	202	460.0	5.1	CB150	T80A4	3.9
7.1	202	452.4	3.2	CB130	T80A4	2.9
7.0	200	442.8	4.1	63/130	T71C4	2.0
7.0	200	435.1	2.3	50/110	T71C4	1.4
7.0	200	442.8	2.3	63/110	T71C4	2.0
7.0	200	420.5	1.2	40/85	T71C4	0.9
7.0	200	427.7	1.2	50/85	T71C4	1.4
7.0	200	427.7	1.2	63/85	T71C4	2.0
7.0	200	404.8	0.7	40/70	T71C4	0.9
7.0	200	413.2	0.7	50/70	T71C4	1.4
7.0	200	419.7	0.7	63/70	T71C4	2.0
7.0	200	405.6	0.6	40/63	T71C4	0.9
6.9	202	470.0	5.0	CB150	T71C4	3.9
6.9	202	462.3	3.2	CB130	T71C4	2.9
6.6	434	454.3	5.9	CB180	T71B2	4.7
6.5	144	569.2	5.0	CB150	T80B6	4.9
6.5	144	552.8	3.2	CB130	T80B6	3.3
6.4	225	487.5	1.8	CB110	T80A4	2.3
6.4	225	453.8	1.0	CB85	T80A4	1.3
6.2	225	464.4	0.9	CB85	T71C4	1.3
6.2	460	388.9	0.7	CB85	T71B2	1.0
6.2	231	509.1	4.6	CB150	T80A4	3.7
6.2	231	492.3	3.0	CB130	T80A4	2.7
6.1	231	519.9	4.5	CB150	T71C4	3.7
6.1	231	502.8	3.0	CB130	T71C4	2.7
5.8	248	546.2	6.3	CB180	T80A4	5.1
5.7	162	558.2	4.4	CB150	T80B6	3.8
5.7	162	539.8	2.8	CB130	T80B6	2.6
5.7	504	509.4	3.3	CB150	T71B2	3.3
5.7	504	500.4	2.3	CB130	T71B2	2.4
5.7	248	557.8	6.2	CB180	T71C4	5.1
5.5	168	531.0	1.8	CB110	T80B6	2.0
5.5	168	493.5	1.0	CB85	T80B6	1.1
5.5	261	565.5	6.0	CB180	T80A4	5.0
5.5	525	539.8	5.2	CB180	T71B2	4.6
5.4	261	578.2	5.9	CB180	T71C4	5.0
5.3	174	619.6	5.9	CB180	T80B6	5.5
5.1	280	524.1	3.1	70/130	T80A4	2.2
5.1	280	524.1	3.1	63/130	T80A4	2.0
5.1	280	514.0	1.9	50/110	T80A4	1.4
5.1	280	524.3	1.9	63/110	T80A4	2.0
5.1	280	524.3	1.9	70/110	T80A4	2.2
5.1	280	483.3	1.0	63/85	T80A4	2.0
5.1	280	483.3	1.0	50/85	T80A4	1.4
5.1	280	483.3	1.0	70/85	T80A4	2.2
5.1	280	483.3	0.6	63/70	T80A4	2.0
5.1	280	483.3	0.6	50/70	T80A4	1.4
5.0	280	535.6	3.0	63/130	T71C4	2.0
5.0	280	525.3	1.9	50/110	T71C4	1.4

1.7 - *Gearmotors*

n_2 min^{-1}	ir	T2 Nm	FS'		0.55 kW	Ptn kW
5.0	280	535.5	1.9	63/110	T71C4	2.0
5.0	286	514.7	1.1	CB110	T80A4	1.8
5.0	280	483.3	1.0	40/85	T71C4	0.9
5.0	280	493.7	1.0	63/85	T71C4	2.0
5.0	280	493.7	1.0	50/85	T71C4	1.4
5.0	286	462.7	0.6	CB85	T80A4	1.0
5.0	280	483.3	0.6	40/70	T71C4	0.9
5.0	288	623.7	4.0	CB150	T80A4	3.6
5.0	576	560.0	2.9	CB150	T71B2	3.2
5.0	288	602.3	2.6	CB130	T80A4	2.6
5.0	576	549.5	2.0	CB130	T71B2	2.3
4.9	288	637.7	3.9	CB150	T71C4	3.6
4.9	288	616.0	2.5	CB130	T71C4	2.6
4.8	600	594.6	4.4	CB180	T71B2	4.4
4.7	304	648.2	5.4	CB180	T80A4	4.9
4.6	304	660.9	5.3	CB180	T71C4	4.9
4.6	202	685.2	3.7	CB150	T80B6	3.7
4.6	202	662.1	2.4	CB130	T80B6	2.5
4.4	323	687.8	3.1	CB150	T80A4	3.5
4.4	323	664.0	2.0	CB130	T80A4	2.5
4.4	213	709.2	5.2	CB180	T80B6	5.0
4.3	323	703.6	3.0	CB150	T71C4	3.5
4.3	323	679.1	1.9	CB130	T71C4	2.5
4.2	342	615.5	0.9	CB110	T80A4	1.8
4.1	225	711.9	1.4	CB110	T80B6	2.0
4.1	225	661.7	0.7	CB85	T80B6	1.1
4.0	231	756.0	3.4	CB150	T80B6	3.5
4.0	231	729.6	2.2	CB130	T80B6	2.4
4.0	720	661.7	2.2	CB150	T71B2	3.0
4.0	720	635.4	1.5	CB130	T71B2	2.2
3.9	368	769.6	4.8	CB180	T80A4	4.7
3.8	750	730.8	5.3	CB215	T71B2	5.3
3.8	750	689.1	3.4	CB180	T71B2	4.1
3.8	368	787.9	4.7	CB180	T71C4	4.7
3.8	248	812.5	4.7	CB180	T80B6	4.9
3.6	394	694.0	0.9	CB110	T80A4	1.8
3.6	400	748.3	2.4	63/130	T80A4	1.5
3.6	400	777.7	2.3	70/130	T80A4	1.7
3.6	400	762.8	1.3	70/110	T80A4	1.7
3.6	400	762.8	1.3	50/110	T80A4	1.0
3.6	400	762.8	1.3	63/110	T80A4	1.5
3.6	400	747.3	0.7	50/85	T80A4	1.0
3.6	400	763.9	0.7	70/85	T80A4	1.7
3.6	400	763.9	0.7	63/85	T80A4	1.5
3.6	261	841.1	4.5	CB180	T80B6	4.7
3.6	403	828.7	2.7	CB150	T80A4	3.4
3.6	403	799.2	1.7	CB130	T80A4	2.4
3.5	400	765.1	2.4	63/130	T71C4	1.5
3.5	400	780.1	1.3	50/110	T71C4	1.0
3.5	400	780.1	1.3	63/110	T71C4	1.5
3.5	400	735.3	0.7	40/85	T71C4	0.6
3.5	400	766.0	0.7	50/85	T71C4	1.0
3.5	400	781.3	0.6	63/85	T71C4	1.5
3.5	267	875.4	6.4	CB215	T80B6	6.0
3.5	403	847.7	2.6	CB150	T71C4	3.4
3.5	403	817.5	1.7	CB130	T71C4	2.4
3.4	420	880.6	4.1	CB180	T80A4	4.7
3.3	428	896.5	5.7	CB215	T80A4	5.8
3.3	420	899.2	4.0	CB180	T71C4	4.7
3.3	434	846.2	3.7	CB180	T80A4	4.3
3.3	428	915.5	5.6	CB215	T71C4	5.8
3.3	286	776.5	0.8	CB110	T80B6	1.8
3.2	434	861.9	3.6	CB180	T71C4	4.3
3.2	288	926.9	2.9	CB150	T80B6	3.4
3.2	288	894.1	1.9	CB130	T80B6	2.3
3.1	460	792.9	0.8	CB110	T80A4	1.8
3.1	300	1017	5.9	CB215	T80B6	6.3
3.1	304	961.4	4.0	CB180	T80B6	4.6
2.9	323	1003	2.3	CB150	T80B6	3.3
2.9	323	967.1	1.5	CB130	T80B6	2.2
2.8	504	943.3	2.1	CB150	T80A4	3.0
2.8	504	924.9	1.5	CB130	T80A4	2.2
2.8	508	990.7	6.2	CB250	T80A4	8.1
2.8	504	963.2	2.1	CB150	T71C4	3.0
2.8	504	945.0	1.4	CB130	T71C4	2.2
2.8	508	1009	6.1	CB250	T71C4	8.1
2.8	518	1066	5.0	CB215	T80A4	5.7
2.7	525	1004	3.2	CB180	T80A4	4.3
2.7	342	810.7	0.8	CB110	T80B6	1.6
2.7	518	1090	4.9	CB215	T71C4	5.7

1.7 - Getriebemotoren

n_2 min^{-1}	ir	T2 Nm	FS'		0.55 kW	Ptn kW
2.7	525	1023	3.2	CB180	T71C4	4.3
2.5	368	1142	3.5	CB180	T80B6	4.5
2.5	573	1072	6.2	CB250	T80A4	7.7
2.5	375	1207	5.0	CB215	T80B6	5.8
2.5	576	1059	1.8	CB150	T80A4	3.0
2.5	576	1038	1.2	CB130	T80A4	2.2
2.4	573	1098	6.1	CB250	T71C4	7.7
2.4	576	1081	1.7	CB150	T71C4	3.0
2.4	576	1060	1.2	CB130	T71C4	2.2
2.4	600	1082	4.5	CB215	T80A4	4.9
2.4	600	1126	2.7	CB180	T80A4	4.2
2.4	600	949.2	1.9	63/130	T80A4	1.7
2.4	600	949.2	1.9	70/130	T80A4	1.9
2.4	600	971.7	1.0	63/110	T80A4	1.7
2.4	600	971.7	1.0	70/110	T80A4	1.9
2.4	600	971.7	1.0	50/110	T80A4	1.2
2.4	394	935.9	0.7	CB110	T80B6	1.6
2.3	600	1105	4.4	CB215	T71C4	4.9
2.3	600	1150	2.6	CB180	T71C4	4.2
2.3	600	970	1.9	63/130	T71C4	1.7
2.3	600	993	1.0	50/110	T71C4	1.2
2.3	600	993	1.0	63/110	T71C4	1.7
2.3	403	1228	2.0	CB150	T80B6	3.2
2.3	403	1183	1.3	CB130	T80B6	2.2
2.2	420	1307	3.0	CB180	T80B6	4.5
2.2	428	1307	4.3	CB215	T80B6	5.4
2.1	435	1399	6.4	CB250	T80B6	8.8
2.1	434	1252	2.7	CB180	T80B6	4.2
2.0	710	1333	5.0	CB250	T80A4	7.7
2.0	720	1214	1.4	CB150	T80A4	2.7
2.0	720	1162	1.0	CB130	T80A4	2.0
2.0	710	1360	4.9	CB250	T71C4	7.7
1.9	720	1246	1.3	CB150	T71C4	2.7
1.9	720	1191	0.9	CB130	T71C4	2.0
1.9	750	1348	3.4	CB215	T80A4	4.9
1.9	750	1265	2.1	CB180	T80A4	3.8
1.9	750	1377	3.3	CB215	T71C4	4.9
1.9	750	1292	2.1	CB180	T71C4	3.8
1.9	504	1391	1.6	CB150	T80B6	2.9
1.9	504	1363	1.1	CB130	T80B6	2.0
1.8	508	1464	4.6	CB250	T80B6	7.7
1.8	518	1547	3.7	CB215	T80B6	5.3
1.8	525	1484	2.4	CB180	T80B6	4.1
1.6	573	1589	4.6	CB250	T80B6	7.4
1.6	576	1534	1.3	CB150	T80B6	2.8
1.6	576	1532	0.9	CB130	T80B6	2.0
1.6	600	1592	3.3	CB215	T80B6	4.7
1.6	600	1626	2.0	CB180	T80B6	3.9
1.5	980	1583	2.4	85/180	T80A4	1.6
1.5	980	1582	1.8	85/150	T80A4	1.6
1.5	980	1512	1.2	70/130	T80A4	1.1
1.5	980	1512	1.2	63/130	T80A4	1.0
1.5	980	1547	1.2	85/130	T80A4	1.6
1.5	980	1475	0.7	50/110	T80A4	0.7
1.5	980	1511	0.7	70/110	T80A4	1.1
1.5	980	1511	0.7	85/110	T80A4	1.1
1.5	980	1511	0.7	63/110	T80A4	1.0
1.4	980	1542	1.2	70/130	T71C4	1.1
1.4	980	1542	1.2	63/130	T71C4	1.0
1.4	980	1507	0.7	50/110	T71C4	0.7
1.4	980	1541	0.6	70/110	T71C4	1.1
1.4	980	1541	0.6	63/110	T71C4	1.0
1.3	710	1884	3.9	CB250	T80B6	7.2
1.3	720	1790	1.0	CB150	T80B6	2.6
1.3	720	1710	0.7	CB130	T80B6	1.8
1.2	750	1990	2.5	CB215	T80B6	4.7
1.2	750	1864	1.6	CB180	T80B6	3.6
1.0	1372	1920	2.4	85/180	T80A4	1.6
1.0	1372	1868	1.6	85/150	T80A4	1.6
1.0	1372	1768	1.0	63/130	T80A4	1.0
1.0	1372	1768	1.0	70/130	T80A4	1.1
1.0	1372	1768	1.0	85/130	T80A4	1.6
1.0	1372	1803	1.0	63/130	T71C4	1.0
1.0	1372	1803	1.0	70/130	T71C4	1.1
0.73	1960	2447	1.9	85/180	T80A4	1.6
0.73	1960	2446	1.2	85/150	T80A4	1.6
0.73	1960	2302	0.8	70/130	T80A4	1.1
0.73	1960	2302	0.8	63/130	T80A4	1.0
0.73	1960	2374	0.8	85/130	T80A4	1.6
0.71	1960	2368	0.8	63/130	T71C4	1.0

1.7 - Motoriduttori

n_2 min^{-1}	ir	T2 Nm	FS'		0.55 kW	Ptn kW
0.71	1960	2368	0.8	70/130	T71C4	1.1
0.51	2800	3194	1.4	85/180	T80A4	1.3
0.51	2800	3190	0.9	85/150	T80A4	1.3
0.51	2800	2781	0.6	70/130	T80A4	0.9
0.51	2800	2886	0.6	63/130	T80A4	0.8
0.51	2800	2991	0.6	85/130	T80A4	1.3
0.50	2800	2837	0.6	70/130	T71C4	0.9
0.50	2800	2938	0.6	63/130	T71C4	0.8
0.36	4000	3795	1.1	85/180	T80A4	1.1
0.36	4000	3650	0.8	85/150	T80A4	1.1
0.26	5600	5050	0.9	85/180	T80A4	1.1
0.20	7000	5776	0.8	85/180	T80A4	1.1
0.18	8000	6127	0.7	85/180	T80A4	1.1

1.7 - *Gearmotors*

n_2 min^{-1}	ir	T2 Nm	FS'		0.75 kW	Ptn kW
562	5	11	2.5	R40	T71C2	1.1
409	7	15.1	6.3	R70	T80A2	2.5
409	7	15.1	5.6	R63	T80A2	2.2
409	7	14.9	3.4	R50	T80A2	1.5
401	7	15.3	5.5	R63	T71C2	2.2
401	7	15.2	3.3	R50	T71C2	1.5
401	7	15.0	1.8	R40	T71C2	1.0
286	5	21.5	3.0	R50	T80B4	1.7
286	10	21.0	5.0	R70	T80A2	2.2
286	10	21.0	4.4	R63	T80A2	2.0
286	10	21.0	2.6	R50	T80A2	1.4
281	10	21.4	4.3	R63	T71C2	2.0
281	10	21.4	2.6	R50	T71C2	1.4
281	10	21.2	1.5	R40	T71C2	0.9
204	7	29.8	4.4	R70	T80B4	2.5
204	7	29.4	3.9	R63	T80B4	2.2
204	7	29.4	2.3	R50	T80B4	1.5
191	15	30.8	3.5	R70	T80A2	1.9
191	15	30.8	3.2	R63	T80A2	1.7
191	15	30.8	1.9	R50	T80A2	1.2
187	15	31.4	3.1	R63	T71C2	1.7
187	15	31.4	1.8	R50	T71C2	1.2
187	15	30.6	1.0	R40	T71C2	0.7
143	10	41.6	3.4	R70	T80B4	2.2
143	10	41.6	3.0	R63	T80B4	2.0
143	20	40.1	2.9	R70	T80A2	1.7
143	20	40.1	2.6	R63	T80A2	1.5
143	10	41.1	1.8	R50	T80B4	1.4
143	20	39.6	1.4	R50	T80A2	1.0
141	20	40.8	2.6	R63	T71C2	1.5
141	20	40.3	1.4	R50	T71C2	1.0
141	20	38.8	0.7	R40	T71C2	0.6
133	7	45.3	6.6	R85	T90S6	3.2
133	7	45.3	3.5	R70	T90S6	2.4
133	7	45.3	3.0	R63	T90S6	2.2
131	7	45.8	3.5	R70	T80C6	2.4
131	7	45.8	3.0	R63	T80C6	2.2
131	7	45.2	1.8	R50	T80C6	1.4
102	28	51.9	2.2	R70	T80A2	1.3
102	28	52.6	2.0	R63	T80A2	1.2
102	28	51.9	1.2	R50	T80A2	0.8
100	28	53.5	2.0	R63	T71C2	1.2
100	28	52.8	1.2	R50	T71C2	0.8
100	28	50.7	0.7	R40	T71C2	0.5
95	15	60.1	2.4	R70	T80B4	1.9
95	15	60.1	2.2	R63	T80B4	1.7
95	15	60.1	1.3	R50	T80B4	1.2
93	10	63.9	5.2	R85	T90S6	3.0
93	10	63.2	2.7	R70	T90S6	2.1
93	10	62.4	2.4	R63	T90S6	1.8
92	10	63.8	2.6	R70	T80C6	2.1
92	10	63.1	2.4	R63	T80C6	1.8
92	10	63.0	1.4	R50	T80C6	1.3
72	40	72.1	3.4	R85	T80A2	1.6
72	20	77.1	2.0	R70	T80B4	1.7
72	40	71.1	1.8	R70	T80A2	1.2
72	20	77.2	1.8	R63	T80B4	1.5
72	40	71.1	1.6	R63	T80A2	1.1
72	20	76.1	1.0	R50	T80B4	1.0
72	40	70.1	0.9	R50	T80A2	0.7
70	40	72.4	1.7	R70	T71C2	1.2
70	40	72.4	1.6	R63	T71C2	1.1
70	40	71.3	0.9	R50	T71C2	0.7
67	43	85.1	3.9	CB85	T80A2	2.4
65	43	86.6	3.8	CB85	T71C2	2.4
65	44	86.0	2.0	CB70	T80A2	1.8
64	44	87.5	1.9	CB70	T71C2	1.8
62	15	91.2	3.6	R85	T90S6	2.4
62	15	90.1	1.9	R70	T90S6	1.7
62	15	90.1	1.7	R63	T90S6	1.6
61	15	91.1	1.9	R70	T80C6	1.7
61	15	91.1	1.7	R63	T80C6	1.6
61	15	92.3	1.0	R50	T80C6	1.2
59	48	96.6	0.9	CB50	T71C2	1.2
58	49	85.9	2.6	R85	T80A2	1.6
58	49	83.5	1.6	R70	T80A2	1.1
58	49	84.7	1.2	R63	T80A2	1.0
58	49	82.2	0.7	R50	T80A2	0.7
57	49	84.9	1.5	R70	T71C2	1.1
57	49	86.2	1.1	R63	T71C2	1.0
57	49	83.7	0.7	R50	T71C2	0.7
56	51	102.2	6.2	CB110	T80A2	4.2

1.7 - Getriebemotoren

n_2 min^{-1}	ir	T2 Nm	FS'		0.75 kW	Ptn kW
56	51	100.9	3.3	CB85	T80A2	2.4
56	51	99.6	1.7	CB70	T80A2	1.8
55	51	102.7	3.2	CB85	T71C2	2.4
55	51	101.4	1.7	CB70	T71C2	1.8
54	52	104.8	0.9	CB50	T71C2	1.2
51	56	98.2	2.3	R85	T80A2	1.6
51	28	99.6	1.5	R70	T80B4	1.3
51	56	93.9	1.4	R70	T80A2	1.0
51	28	99.6	1.4	R63	T80B4	1.2
51	56	94.0	1.1	R63	T80A2	0.9
51	28	98.2	0.8	R50	T80B4	0.8
51	56	91.3	0.6	R50	T80A2	0.6
50	56	95.7	1.4	R70	T71C2	1.0
50	56	95.6	1.1	R63	T71C2	0.9
48	59	118.2	5.7	CB110	T80A2	4.2
48	59	116.8	3.0	CB85	T80A2	2.4
48	59	115.2	1.6	CB70	T80A2	1.8
48	59	118.8	3.0	CB85	T71C2	2.4
48	59	117.3	1.5	CB70	T71C2	1.8
47	20	118.6	3.1	R85	T90S6	2.2
47	20	115.5	1.5	R70	T90S6	1.5
47	20	115.5	1.4	R63	T90S6	1.4
46	61	122.8	0.8	CB50	T71C2	1.2
46	20	116.8	1.5	R70	T80C6	1.5
46	20	116.7	1.4	R63	T80C6	1.4
46	20	115.2	0.7	R50	T80C6	0.9
41	69	136.5	5.3	CB110	T80A2	4.2
41	69	134.8	2.8	CB85	T80A2	2.4
41	70	115.7	1.8	R85	T80A2	1.3
41	70	135.0	1.4	CB70	T80A2	1.8
41	70	108.7	1.1	R70	T80A2	0.9
41	70	110.5	0.9	R63	T80A2	0.8
41	69	137.2	2.8	CB85	T71C2	2.4
40	70	137.3	1.4	CB70	T71C2	1.8
40	70	110.6	1.1	R70	T71C2	0.9
40	70	112.4	0.8	R63	T71C2	0.8
38	73	124.8	0.7	CB50	T71C2	0.8
36	80	144.3	4.6	CB110	T80A2	3.2
36	80	138.2	2.3	CB85	T80A2	1.7
36	40	138.2	2.3	R85	T80B4	1.6
36	80	126.2	1.5	R85	T80A2	1.2
36	40	134.3	1.2	R70	T80B4	1.2
36	40	134.3	1.1	R63	T80B4	1.1
36	80	120.2	0.9	R70	T80A2	0.8
36	80	122.2	0.7	R63	T80A2	0.8
36	40	132.4	0.6	R50	T80B4	0.7
35	80	140.7	2.3	CB85	T71C2	1.7
35	80	122.3	0.9	R70	T71C2	0.8
35	80	124.3	0.7	R63	T71C2	0.8
34	83	141.4	1.2	CB70	T80A2	1.3
34	83	143.9	1.2	CB70	T71C2	1.3
33	43	168.0	4.6	CB110	T80B4	3.8
33	43	165.8	2.4	CB85	T80B4	2.2
33	28	148.8	2.1	R85	T90S6	1.6
33	28	146.7	1.2	R70	T90S6	1.2
33	28	146.6	1.1	R63	T90S6	1.1
33	28	148.3	1.1	R70	T80C6	1.2
33	28	148.3	1.1	R63	T80C6	1.1
33	28	146.2	0.6	R50	T80C6	0.7
33	44	167.5	1.2	CB70	T80B4	1.6
29	49	159.6	1.8	R85	T80B4	1.6
29	49	157.0	1.1	R70	T80B4	1.1
29	49	157.0	0.8	R63	T80B4	1.0
29	100	147.8	1.2	R85	T80A2	1.1
29	100	145.2	0.7	R70	T80A2	0.8
28	100	147.7	0.7	R70	T71C2	0.8
28	51	199.2	3.9	CB110	T80B4	3.8
28	51	196.6	2.0	CB85	T80B4	2.2
28	51	194.1	1.1	CB70	T80B4	1.6
26	110	198.3	3.6	CB110	T80A2	3.2
26	110	187.4	1.8	CB85	T80A2	1.7
26	110	184.7	1.0	CB70	T80A2	1.3
26	110	190.6	1.8	CB85	T71C2	1.7
26	110	187.8	1.0	CB70	T71C2	1.3
26	56	185.0	1.5	R85	T80B4	1.6
26	56	174.0	1.0	R70	T80B4	1.0
26	56	173.8	0.7	R63	T80B4	0.9
25	115	210.2	6.2	CB130	T80A2	4.2
25	58	223.7	6.5	CB130	T80B4	4.9
24	115	214.0	6.1	CB130	T71C2	4.2

1.7 - Motoriduttori

n_2 min^{-1}	ir	T2 Nm	FS'		0.75 kW	Ptn kW
24	59	224.6	3.9	CB110	T80B4	3.8
24	59	221.6	2.0	CB85	T80B4	2.2
24	59	218.6	1.1	CB70	T80B4	1.6
23	40	237.2	6.5	CB130	T90S6	4.7
23	40	209.5	3.5	R110	T90S6	2.6
23	40	203.4	1.8	R85	T90S6	1.5
23	40	197.0	0.9	R70	T90S6	1.1
23	40	197.3	0.8	R63	T90S6	1.0
23	40	239.8	6.4	CB130	T80C6	4.7
23	40	205.5	1.7	R85	T80C6	1.5
23	40	199.3	0.9	R70	T80C6	1.1
23	40	199.2	0.8	R63	T80C6	1.0
22	129	229.3	3.3	CB110	T80A2	3.2
22	129	216.5	1.7	CB85	T80A2	1.7
22	130	214.8	0.9	CB70	T80A2	1.3
22	129	220.4	1.6	CB85	T71C2	1.7
22	43	251.6	3.5	CB110	T90S6	3.8
22	43	248.4	1.8	CB85	T90S6	2.2
22	130	218.7	0.9	CB70	T71C2	1.3
21	43	254.3	3.5	CB110	T80C6	3.8
21	43	251.1	1.8	CB85	T80C6	2.2
21	44	250.7	0.9	CB70	T90S6	1.6
21	44	253.6	0.9	CB70	T80C6	1.6
21	69	262.7	3.3	CB110	T80B4	3.8
21	69	259.2	1.7	CB85	T80B4	2.2
20	70	213.9	1.2	R85	T80B4	1.3
20	70	259.6	0.9	CB70	T80B4	1.6
20	70	199.9	0.7	R70	T80B4	0.9
20	72	274.1	5.6	CB130	T80B4	4.7
20	144	259.7	5.3	CB130	T80A2	4.0
20	144	264.3	5.2	CB130	T71C2	4.0
19.0	49	249.0	2.7	R110	T90S6	2.5
19.0	49	233.9	1.4	R85	T90S6	1.3
19.0	49	230.0	0.6	R63	T90S6	0.9
18.8	49	236.4	1.4	R85	T80C6	1.3
18.8	49	228.7	0.8	R70	T80C6	1.0
18.8	49	232.5	0.6	R63	T80C6	0.9
18.6	50	296.5	5.5	CB130	T90S6	4.5
18.4	50	299.7	5.4	CB130	T80C6	4.5
18.2	51	290.6	3.4	CB110	T90S6	3.4
18.2	51	286.7	1.7	CB85	T90S6	2.0
18.2	51	286.8	0.8	CB70	T90S6	1.5
18.0	51	293.8	3.4	CB110	T80C6	3.4
18.0	51	289.8	1.7	CB85	T80C6	2.0
18.0	51	289.6	0.8	CB70	T80C6	1.5
17.9	80	276.4	2.9	CB110	T80B4	2.9
17.9	80	260.5	1.5	CB85	T80B4	1.5
17.9	80	232.5	1.0	R85	T80B4	1.2
17.9	80	216.3	0.7	R70	T80B4	0.8
17.7	162	263.7	4.4	CB130	T80A2	3.2
17.4	162	268.3	4.3	CB130	T71C2	3.2
17.2	166	249.6	0.8	CB70	T80A2	1.0
17.2	83	266.3	0.8	CB70	T80B4	1.2
17.0	168	277.8	2.4	CB110	T80A2	2.6
17.0	168	260.8	1.3	CB85	T80A2	1.4
16.9	166	254.0	0.7	CB70	T71C2	1.0
16.8	85	306.6	4.7	CB130	T80B4	4.0
16.7	168	265.3	1.2	CB85	T71C2	1.4
16.6	56	275.9	1.9	R110	T90S6	2.3
16.6	56	267.4	1.2	R85	T90S6	1.3
16.4	56	270.1	1.2	R85	T80C6	1.3
16.4	56	252.6	0.8	R70	T80C6	0.9
16.0	58	339.6	4.8	CB130	T90S6	4.3
15.9	58	343.2	4.7	CB130	T80C6	4.3
15.8	59	336.3	2.9	CB110	T90S6	3.4
15.8	59	331.9	1.5	CB85	T90S6	2.0
15.8	59	327.1	0.8	CB70	T90S6	1.5
15.6	59	340.0	2.9	CB110	T80C6	3.4
15.6	59	335.4	1.5	CB85	T80C6	2.0
15.6	59	331.0	0.8	CB70	T80C6	1.5
14.3	100	265.5	0.8	R85	T80B4	1.1
14.2	202	333.9	5.9	CB150	T80A2	4.4
14.2	202	323.7	3.8	CB130	T80A2	3.1
13.9	202	339.8	5.8	CB150	T71C2	4.4
13.9	202	329.5	3.7	CB130	T71C2	3.1
13.5	69	393.3	2.5	CB110	T90S6	3.4
13.5	69	387.8	1.3	CB85	T90S6	2.0
13.3	69	397.7	2.5	CB110	T80C6	3.4
13.3	69	392.3	1.3	CB85	T80C6	2.0
13.3	70	323.4	1.7	R110	T90S6	2.1

1.7 - *Gearmotors*

n_2 min^{-1}	ir	T2 Nm	FS'		0.75 kW	Ptn kW
13.3	70	307.2	1.0	R85	T90S6	1.2
13.3	70	388.3	0.7	CB70	T90S6	1.5
13.1	70	310.7	1.0	R85	T80C6	1.2
13.1	70	392.1	0.7	CB70	T80C6	1.5
13.0	110	363.7	2.5	CB110	T80B4	2.9
13.0	110	341.7	1.3	CB85	T80B4	1.5
13.0	110	341.3	0.7	CB70	T80B4	1.2
12.9	72	415.8	6.3	CB150	T90S6	5.9
12.9	72	415.7	4.1	CB130	T90S6	4.2
12.8	72	420.3	6.2	CB150	T80C6	5.9
12.8	72	420.4	4.1	CB130	T80C6	4.2
12.7	225	360.7	2.1	CB110	T80A2	2.5
12.7	225	338.0	1.0	CB85	T80A2	1.4
12.5	228	325.8	0.7	CB70	T80A2	1.0
12.5	225	344.2	1.0	CB85	T71C2	1.4
12.4	115	414.9	5.9	CB150	T80B4	5.3
12.4	115	409.1	3.8	CB130	T80B4	3.9
12.4	231	370.2	5.3	CB150	T80A2	4.1
12.4	231	358.7	3.5	CB130	T80A2	3.0
12.3	228	331.2	0.6	CB70	T71C2	1.0
12.2	231	377.0	5.3	CB150	T71C2	4.1
12.2	231	365.2	3.5	CB130	T71C2	3.0
11.6	80	406.7	2.2	CB110	T90S6	2.9
11.6	80	357.4	1.6	R110	T90S6	2.0
11.6	80	382.1	1.1	CB85	T90S6	1.5
11.6	80	332.8	0.8	R85	T90S6	1.1
11.5	80	411.2	2.2	CB110	T80C6	2.9
11.5	80	386.2	1.1	CB85	T80C6	1.5
11.5	80	336.6	0.8	R85	T80C6	1.1
11.1	129	426.3	2.1	CB110	T80B4	2.9
11.1	129	400.6	1.1	CB85	T80B4	1.5
10.9	85	471.4	5.4	CB150	T90S6	5.3
10.9	85	458.2	3.5	CB130	T90S6	3.5
10.8	85	476.7	5.3	CB150	T80C6	5.3
10.8	85	463.4	3.5	CB130	T80C6	3.5
10.2	140	428.0	3.9	63/130	T80B4	2.2
10.2	140	435.0	3.8	70/130	T80B4	2.5
10.2	140	420.9	2.4	63/110	T80B4	2.2
10.2	140	420.9	2.4	50/110	T80B4	1.5
10.2	140	427.8	2.3	70/110	T80B4	2.5
10.2	140	420.9	1.2	63/85	T80B4	2.2
10.2	140	420.9	1.2	50/85	T80B4	1.5
10.2	140	420.9	1.2	70/85	T80B4	2.5
10.2	140	399.8	0.7	63/70	T80B4	2.2
10.2	140	399.8	0.7	50/70	T80B4	1.5
10.0	286	379.5	1.3	CB110	T80A2	1.9
10.0	286	358.1	0.7	CB85	T80A2	1.1
9.9	144	512.1	5.1	CB150	T80B4	5.1
9.9	288	447.2	4.7	CB150	T80A2	3.9
9.9	144	504.8	3.2	CB130	T80B4	3.7
9.9	288	440.1	3.0	CB130	T80A2	2.9
9.8	286	364.5	0.7	CB85	T71C2	1.1
9.8	288	455.0	4.6	CB150	T71C2	3.9
9.8	288	447.7	3.0	CB130	T71C2	2.9
9.4	304	471.9	6.3	CB180	T80A2	5.4
9.3	100	408.3	1.2	R110	T90S6	1.8
9.3	100	385.3	0.6	R85	T90S6	1.0
9.2	304	480.6	6.2	CB180	T71C2	5.4
9.2	100	389.4	0.6	R85	T80C6	1.0
8.9	323	493.7	3.6	CB150	T80A2	3.8
8.9	323	477.4	2.3	CB130	T80A2	2.7
8.8	162	511.1	4.3	CB150	T80B4	4.0
8.8	162	503.0	2.8	CB130	T80B4	3.0
8.7	323	502.1	3.6	CB150	T71C2	3.8
8.7	323	485.9	2.3	CB130	T71C2	2.7
8.6	107	591.4	6.6	CB180	T80C6	7.0
8.5	168	521.7	1.5	CB110	T80B4	2.3
8.5	168	487.8	0.8	CB85	T80B4	1.3
8.5	110	534.2	1.9	CB110	T90S6	2.4
8.5	110	500.0	1.0	CB85	T90S6	1.3
8.4	110	539.6	1.9	CB110	T80C6	2.4
8.4	342	454.0	1.1	CB110	T80A2	1.9
8.4	110	505.6	0.9	CB85	T80C6	1.3
8.2	174	566.3	5.9	CB180	T80B4	5.8
8.1	115	619.7	4.4	CB150	T90S6	4.9
8.1	115	610.9	2.8	CB130	T90S6	3.4
8.0	115	626.7	4.3	CB150	T80C6	4.9
8.0	115	617.7	2.8	CB130	T80C6	3.4
7.8	368	562.3	5.6	CB180	T80A2	5.2
7.6	368	571.9	5.5	CB180	T71C2	5.2

1.7 - Getriebemotoren

n_2 min^{-1}	ir	T2 Nm	FS'		0.75 kW	Ptn kW
7.5	124	678.1	5.9	CB180	T90S6	7.0
7.4	124	685.3	5.9	CB180	T80C6	7.0
7.3	394	513.0	1.0	CB110	T80A2	1.9
7.2	129	626.0	1.6	CB110	T90S6	2.4
7.2	129	586.3	0.8	CB85	T90S6	1.3
7.2	200	591.1	3.0	70/130	T80B4	2.2
7.2	200	591.1	3.0	63/130	T80B4	2.0
7.2	200	580.9	1.7	50/110	T80B4	1.4
7.2	200	591.0	1.7	63/110	T80B4	2.0
7.2	200	591.0	1.7	70/110	T80B4	2.2
7.2	200	570.8	0.9	50/85	T80B4	1.4
7.2	200	570.8	0.9	63/85	T80B4	2.0
7.2	200	570.8	0.9	70/85	T80B4	2.2
7.1	129	632.9	1.6	CB110	T80C6	2.4
7.1	129	593.1	0.8	CB85	T80C6	1.3
7.1	403	605.3	3.1	CB150	T80A2	3.7
7.1	403	585.0	2.0	CB130	T80A2	2.7
7.1	202	627.3	3.7	CB150	T80B4	3.9
7.1	202	617.0	2.4	CB130	T80B4	2.9
7.0	403	616.6	3.1	CB150	T71C2	3.7
7.0	403	596.2	2.0	CB130	T71C2	2.7
6.8	420	641.6	4.9	CB180	T80A2	5.2
6.7	213	651.1	5.1	CB180	T80B4	5.2
6.7	420	653.1	4.8	CB180	T71C2	5.2
6.6	434	619.5	4.3	CB180	T80A2	4.7
6.6	428	665.0	6.5	CB215	T71C2	6.4
6.5	434	631.0	4.2	CB180	T71C2	4.7
6.5	144	776.2	3.7	CB150	T90S6	4.9
6.5	144	753.8	2.4	CB130	T90S6	3.3
6.4	144	784.5	3.6	CB150	T80C6	4.9
6.4	144	762.4	2.3	CB130	T80C6	3.3
6.4	225	664.7	1.3	CB110	T80B4	2.3
6.4	225	618.8	0.7	CB85	T80B4	1.3
6.2	460	587.3	0.9	CB110	T80A2	1.9
6.2	150	808.6	5.2	CB180	T90S6	6.8
6.2	231	694.2	3.4	CB150	T80B4	3.7
6.2	231	671.3	2.2	CB130	T80B4	2.7
6.1	150	817.9	5.1	CB180	T80C6	6.8
5.8	248	744.8	4.6	CB180	T80B4	5.1
5.7	162	761.2	3.2	CB150	T90S6	3.8
5.7	162	736.1	2.1	CB130	T90S6	2.6
5.7	162	769.2	3.2	CB150	T80C6	3.8
5.7	162	744.2	2.1	CB130	T80C6	2.6
5.7	504	694.6	2.5	CB150	T80A2	3.3
5.7	504	682.4	1.7	CB130	T80A2	2.4
5.6	504	706.1	2.4	CB150	T71C2	3.3
5.6	504	693.3	1.7	CB130	T71C2	2.4
5.5	168	724.0	1.3	CB110	T90S6	2.0
5.5	168	672.9	0.7	CB85	T90S6	1.1
5.5	518	778.4	5.8	CB215	T80A2	6.3
5.5	261	771.1	4.4	CB180	T80B4	5.0
5.5	168	732.0	1.3	CB110	T80C6	2.0
5.5	168	679.2	0.7	CB85	T80C6	1.1
5.5	525	736.0	3.8	CB180	T80A2	4.6
5.4	518	792.9	5.7	CB215	T71C2	6.3
5.4	267	815.1	6.3	CB215	T80B4	6.4
5.4	525	749.7	3.7	CB180	T71C2	4.6
5.3	174	845.0	4.3	CB180	T90S6	5.5
5.3	174	853.1	4.3	CB180	T80C6	5.5
5.1	280	714.7	2.2	63/130	T80B4	2.0
5.1	280	714.7	2.2	70/130	T80B4	2.2
5.1	280	700.9	1.4	50/110	T80B4	1.4
5.1	280	715.0	1.4	63/110	T80B4	2.0
5.1	280	715.0	1.4	70/110	T80B4	2.2
5.1	280	659.1	0.8	50/85	T80B4	1.4
5.1	280	659.1	0.8	70/85	T80B4	2.2
5.1	280	659.1	0.8	63/85	T80B4	2.0
5.0	286	701.8	0.8	CB110	T80B4	1.8
5.0	288	850.5	2.9	CB150	T80B4	3.6
5.0	576	763.7	2.1	CB150	T80A2	3.2
5.0	288	821.3	1.9	CB130	T80B4	2.6
5.0	576	749.3	1.5	CB130	T80A2	2.3
4.9	576	777.8	2.1	CB150	T71C2	3.2
4.9	576	763.1	1.4	CB130	T71C2	2.3
4.8	300	930.9	5.9	CB215	T80B4	6.6
4.8	600	795.8	5.2	CB215	T80A2	5.3
4.8	600	810.8	3.2	CB180	T80A2	4.4
4.7	304	884.0	4.0	CB180	T80B4	4.9
4.7	600	811.2	5.1	CB215	T71C2	5.3
4.7	600	826.4	3.2	CB180	T71C2	4.4

1.7 - Motoriduttori

n_2 min^{-1}	ir	T2 Nm	FS'		0.75 kW	Ptn kW
4.6	202	934.3	2.7	CB150	T90S6	3.7
4.6	202	902.8	1.8	CB130	T90S6	2.5
4.6	202	944.4	2.7	CB150	T80C6	3.7
4.6	202	913.1	1.8	CB130	T80C6	2.5
4.4	323	937.9	2.3	CB150	T80B4	3.5
4.4	323	905.4	1.4	CB130	T80B4	2.5
4.4	213	1016	5.5	CB215	T90S6	6.6
4.4	213	967.1	3.8	CB180	T90S6	5.0
4.3	213	1028	5.5	CB215	T80C6	6.6
4.3	213	978.1	3.8	CB180	T80C6	5.0
4.2	342	839.3	0.7	CB110	T80B4	1.8
4.1	225	970.8	1.0	CB110	T90S6	2.0
4.1	225	981.2	1.0	CB110	T80C6	2.0
4.0	710	977.4	5.8	CB250	T80A2	8.4
4.0	231	1031	2.5	CB150	T90S6	3.5
4.0	231	994.9	1.6	CB130	T90S6	2.4
4.0	231	1044	2.5	CB150	T80C6	3.5
4.0	231	1008	1.6	CB130	T80C6	2.4
4.0	720	902.4	1.6	CB150	T80A2	3.0
4.0	720	866.5	1.1	CB130	T80A2	2.2
4.0	710	994.7	5.7	CB250	T71C2	8.4
3.9	720	918.4	1.6	CB150	T71C2	3.0
3.9	720	881.2	1.1	CB130	T71C2	2.2
3.9	368	1049	3.5	CB180	T80B4	4.7
3.8	375	1109	5.0	CB215	T80B4	6.1
3.8	750	996.5	3.9	CB215	T80A2	5.3
3.8	750	939.7	2.5	CB180	T80A2	4.1
3.8	248	1165	5.0	CB215	T90S6	6.4
3.8	750	1012	3.9	CB215	T71C2	5.3
3.8	248	1108	3.4	CB180	T90S6	4.9
3.8	750	955.1	2.4	CB180	T71C2	4.1
3.7	248	1178	4.9	CB215	T80C6	6.4
3.7	248	1120	3.4	CB180	T80C6	4.9
3.6	394	946.3	0.7	CB110	T80B4	1.8
3.6	400	1020	1.8	63/130	T80B4	1.5
3.6	400	1061	1.7	70/130	T80B4	1.7
3.6	400	1040	1.0	70/110	T80B4	1.7
3.6	400	1040	1.0	63/110	T80B4	1.5
3.6	400	1040	1.0	50/110	T80B4	1.0
3.6	261	1147	3.3	CB180	T90S6	4.7
3.6	403	1130	2.0	CB150	T80B4	3.4
3.6	403	1090	1.3	CB130	T80B4	2.4
3.5	261	1160	3.2	CB180	T80C6	4.7
3.5	267	1194	4.7	CB215	T90S6	6.0
3.5	267	1204	4.7	CB215	T80C6	6.0
3.4	420	1201	3.0	CB180	T80B4	4.7
3.3	428	1222	4.2	CB215	T80B4	5.8
3.3	435	1285	6.3	CB250	T80B4	9.2
3.3	434	1154	2.7	CB180	T80B4	4.3
3.2	288	1264	2.1	CB150	T90S6	3.4
3.2	288	1219	1.4	CB130	T90S6	2.3
3.2	288	1280	2.1	CB150	T80C6	3.4
3.2	288	1234	1.4	CB130	T80C6	2.3
3.1	300	1387	4.4	CB215	T90S6	6.3
3.1	300	1400	4.3	CB215	T80C6	6.3
3.1	304	1311	2.9	CB180	T90S6	4.6
3.0	304	1324	2.9	CB180	T80C6	4.6
2.9	323	1368	1.7	CB150	T90S6	3.3
2.9	323	1319	1.1	CB130	T90S6	2.2
2.9	323	1382	1.7	CB150	T80C6	3.3
2.9	323	1332	1.1	CB130	T80C6	2.2
2.8	504	1286	1.5	CB150	T80B4	3.0
2.8	504	1261	1.1	CB130	T80B4	2.2
2.8	508	1351	4.6	CB250	T80B4	8.1
2.8	518	1453	3.6	CB215	T80B4	5.7
2.7	525	1369	2.4	CB180	T80B4	4.3
2.6	360	1638	6.0	CB250	T90S6	9.2
2.6	360	1651	5.9	CB250	T80C6	9.2
2.5	368	1557	2.6	CB180	T90S6	4.5
2.5	573	1461	4.5	CB250	T80B4	7.7
2.5	368	1576	2.5	CB180	T80C6	4.5
2.5	375	1647	3.7	CB215	T90S6	5.8
2.5	576	1444	1.3	CB150	T80B4	3.0
2.5	576	1415	0.9	CB130	T80B4	2.2
2.5	375	1667	3.6	CB215	T80C6	5.8
2.4	600	1475	3.3	CB215	T80B4	4.9
2.4	600	1535	2.0	CB180	T80B4	4.2
2.4	600	1294	1.4	63/130	T80B4	1.7
2.4	600	1294	1.4	70/130	T80B4	1.9
2.4	600	1325	0.8	63/110	T80B4	1.7

1.7 - *Gearmotors*

n_2 min^{-1}	ir	T2 Nm	FS'		0.75 kW	Ptn kW
2.4	600	1325	0.8	50/110	T80B4	1.2
2.4	600	1325	0.8	70/110	T80B4	1.9
2.3	403	1674	1.4	CB150	T90S6	3.2
2.3	403	1613	0.9	CB130	T90S6	2.2
2.3	403	1696	1.4	CB150	T80C6	3.2
2.3	403	1634	0.9	CB130	T80C6	2.2
2.2	420	1783	2.2	CB180	T90S6	4.5
2.2	420	1799	2.2	CB180	T80C6	4.5
2.2	428	1782	3.1	CB215	T90S6	5.4
2.2	428	1799	3.1	CB215	T80C6	5.4
2.1	435	1908	4.7	CB250	T90S6	8.8
2.1	434	1707	2.0	CB180	T90S6	4.2
2.1	434	1723	2.0	CB180	T80C6	4.2
2.1	435	1935	4.6	CB250	T80C6	8.8
2.0	710	1817	3.7	CB250	T80B4	7.7
2.0	720	1655	1.0	CB150	T80B4	2.7
2.0	720	1584	0.7	CB130	T80B4	2.0
1.9	750	1838	2.5	CB215	T80B4	4.9
1.9	750	1725	1.6	CB180	T80B4	3.8
1.9	504	1897	1.1	CB150	T90S6	2.9
1.9	504	1859	0.8	CB130	T90S6	2.0
1.8	508	1996	3.4	CB250	T90S6	7.7
1.8	504	1917	1.1	CB150	T80C6	2.9
1.8	504	1878	0.8	CB130	T80C6	2.0
1.8	508	2018	3.4	CB250	T80C6	7.7
1.8	518	2109	2.7	CB215	T90S6	5.3
1.8	518	2132	2.7	CB215	T80C6	5.3
1.8	525	2023	1.8	CB180	T90S6	4.1
1.8	525	2046	1.7	CB180	T80C6	4.1
1.6	573	2167	3.4	CB250	T90S6	7.4
1.6	573	2180	3.3	CB250	T80C6	7.4
1.6	576	2091	1.0	CB150	T90S6	2.8
1.6	576	2090	0.7	CB130	T90S6	2.0
1.6	576	2103	1.0	CB150	T80C6	2.8
1.6	576	2102	0.7	CB130	T80C6	2.0
1.6	600	2171	2.4	CB215	T90S6	4.7
1.6	600	2217	1.5	CB180	T90S6	3.9
1.5	600	2201	2.4	CB215	T80C6	4.7
1.5	600	2247	1.5	CB180	T80C6	3.9
1.5	980	2158	1.8	85/180	T80B4	1.6
1.5	980	2158	1.3	85/150	T80B4	1.6
1.5	980	2061	0.9	70/130	T80B4	1.1
1.5	980	2061	0.9	63/130	T80B4	1.0
1.5	980	2109	0.9	85/130	T80B4	1.6
1.3	710	2570	2.8	CB250	T90S6	7.2
1.3	710	2589	2.8	CB250	T80C6	7.2
1.3	720	2442	0.7	CB150	T90S6	2.6
1.3	720	2464	0.7	CB150	T80C6	2.6
1.2	750	2714	1.8	CB215	T90S6	4.7
1.2	750	2541	1.2	CB180	T90S6	3.6
1.2	750	2736	1.8	CB215	T80C6	4.7
1.2	750	2562	1.1	CB180	T80C6	3.6
1.0	1372	2618	1.8	85/180	T80B4	1.6
1.0	1372	2547	1.1	85/150	T80B4	1.6
1.0	1372	2411	0.7	70/130	T80B4	1.1
1.0	1372	2411	0.7	63/130	T80B4	1.0
1.0	1372	2411	0.7	85/130	T80B4	1.6
0.73	1960	3337	1.4	85/180	T80B4	1.6
0.73	1960	3336	0.9	85/150	T80B4	1.6
0.51	2800	4356	1.1	85/180	T80B4	1.3
0.51	2800	4350	0.7	85/150	T80B4	1.3
0.36	4000	5175	0.8	85/180	T80B4	1.1
0.26	5600	6886	0.7	85/180	T80B4	1.1

1.7 - Getriebemotoren

n_2 min^{-1}	ir	T2 Nm	FS'		0.88 kW	Ptn kW
282	5	25.6	2.5	R50	T80C4	1.7
201	7	35.5	3.7	R70	T80C4	2.5
201	7	35	3.3	R63	T80C4	2.2
201	7	35.1	1.9	R50	T80C4	1.5
141	10	49.5	2.9	R70	T80C4	2.2
141	10	49.5	2.5	R63	T80C4	2
141	10	48.9	1.5	R50	T80C4	1.4
94	15	71.5	2	R70	T80C4	1.9
94	15	71.5	1.8	R63	T80C4	1.7
94	15	71.5	1.1	R50	T80C4	1.2
71	20	91.8	1.6	R70	T80C4	1.7
71	20	91.8	1.5	R63	T80C4	1.5
71	20	90.6	0.8	R50	T80C4	1
50	28	118.5	1.2	R70	T80C4	1.3
50	28	118.4	1.1	R63	T80C4	1.2
50	28	116.7	0.7	R50	T80C4	0.8
35	40	164.5	1.9	R85	T80C4	1.6
35	40	159.8	1	R70	T80C4	1.2
35	40	159.7	0.9	R63	T80C4	1.1
33	43	199.9	3.8	CB110	T80C4	3.8
33	43	197.4	2	CB85	T80C4	2.2
32	44	199.3	1	CB70	T80C4	1.6
29	49	189.8	1.5	R85	T80C4	1.6
29	49	186.8	0.9	R70	T80C4	1.1
29	49	186.8	0.7	R63	T80C4	1
28	50	232.5	6.3	CB130	T80C4	5.1
28	51	237.1	3.2	CB110	T80C4	3.8
28	51	234.1	1.7	CB85	T80C4	2.2
28	51	231	0.9	CB70	T80C4	1.6
25	56	220.2	1.3	R85	T80C4	1.6
25	56	207	0.8	R70	T80C4	1
25	56	207	0.6	R63	T80C4	0.9
24	58	266.2	5.5	CB130	T80C4	4.9
24	59	267.2	3.3	CB110	T80C4	3.8
24	59	263.8	1.7	CB85	T80C4	2.2
24	59	260.3	0.9	CB70	T80C4	1.6
20	69	312.6	2.8	CB110	T80C4	3.8
20	69	308.6	1.5	CB85	T80C4	2.2
20	70	254.6	1	R85	T80C4	1.3
20	70	308.7	0.8	CB70	T80C4	1.6
20	70	238	0.6	R70	T80C4	0.9
20	72	326.2	4.7	CB130	T80C4	4.7
17.6	80	329.2	2.4	CB110	T80C4	2.9
17.6	80	310.2	1.2	CB85	T80C4	1.5
17.6	80	276.6	0.9	R85	T80C4	1.2
17	83	316.3	0.6	CB70	T80C4	1.2
16.6	85	369.8	6.2	CB150	T80C4	5.5
16.6	85	364.8	4	CB130	T80C4	4
14.1	100	315.6	0.7	R85	T80C4	1.1
12.8	110	432.8	2.1	CB110	T80C4	2.9
12.8	110	406.5	1.1	CB85	T80C4	1.5
12.3	115	493.5	5	CB150	T80C4	5.3
12.3	115	486.7	3.2	CB130	T80C4	3.9
10.9	129	507.5	1.8	CB110	T80C4	2.9
10.9	129	476.5	0.9	CB85	T80C4	1.5
10.1	140	509.2	3.3	63/130	T80C4	2.2
10.1	140	517.5	3.2	70/130	T80C4	2.5
10.1	140	500.9	2	50/110	T80C4	1.5
10.1	140	500.9	2	63/110	T80C4	2.2
10.1	140	509	2	70/110	T80C4	2.5
10.1	140	500.6	1	50/85	T80C4	1.5
10.1	140	500.6	1	70/85	T80C4	2.5
10.1	140	500.6	1	63/85	T80C4	2.2
9.8	144	609.5	4.2	CB150	T80C4	5.1
9.8	144	600.8	2.7	CB130	T80C4	3.7
9.4	150	643.7	5.9	CB180	T80C4	7.3
8.7	162	608.7	3.6	CB150	T80C4	4
8.7	162	598.9	2.3	CB130	T80C4	3
8.4	168	620.9	1.3	CB110	T80C4	2.3
8.4	168	581.2	0.7	CB85	T80C4	1.3
8.1	174	674.3	4.9	CB180	T80C4	5.8
7.1	200	703.4	2.6	70/130	T80C4	2.2
7.1	200	703.4	2.6	63/130	T80C4	2
7.1	200	691.3	1.4	50/110	T80C4	1.4
7.1	200	703.4	1.4	63/110	T80C4	2
7.1	200	703.4	1.4	70/110	T80C4	2.2
7.1	200	679	0.7	70/85	T80C4	2.2
7.1	200	679	0.7	50/85	T80C4	1.4
7.1	200	679	0.7	63/85	T80C4	2
7	202	746.5	3.1	CB150	T80C4	3.9

1.7 - Motoriduttori

n_2 min^{-1}	ir	T2 Nm	FS'		0.88 kW	Ptn kW
7	202	734.3	2	CB130	T80C4	2.9
6.6	213	812.4	6.3	CB215	T80C4	7
6.6	213	774.4	4.3	CB180	T80C4	5.2
6.3	225	791.1	1.1	CB110	T80C4	2.3
6.1	231	826.6	2.8	CB150	T80C4	3.7
6.1	231	799.2	1.9	CB130	T80C4	2.7
5.7	248	930.5	5.7	CB215	T80C4	6.8
5.7	248	886.2	3.9	CB180	T80C4	5.1
5.4	261	918.1	3.7	CB180	T80C4	5
5.3	267	970.9	5.3	CB215	T80C4	6.4
5	280	850.2	1.9	70/130	T80C4	2.2
5	280	850.2	1.9	63/130	T80C4	2
5	280	834.1	1.2	50/110	T80C4	1.4
5	280	850.2	1.2	63/110	T80C4	2
5	280	850.2	1.2	70/110	T80C4	2.2
5	280	784.3	0.6	70/85	T80C4	2.2
5	280	784.3	0.6	63/85	T80C4	2
5	280	784.3	0.6	50/85	T80C4	1.4
4.9	286	835.6	0.7	CB110	T80C4	1.8
4.9	288	1012	2.4	CB150	T80C4	3.6
4.9	288	977.3	1.6	CB130	T80C4	2.6
4.7	300	1109	5	CB215	T80C4	6.6
4.6	304	1051	3.3	CB180	T80C4	4.9
4.4	323	1116	1.9	CB150	T80C4	3.5
4.4	323	1077	1.2	CB130	T80C4	2.5
3.8	368	1251	2.9	CB180	T80C4	4.7
3.8	375	1319	4.2	CB215	T80C4	6.1
3.5	400	1218	1.5	63/130	T80C4	1.5
3.5	400	1265	1.4	70/130	T80C4	1.7
3.5	400	1241	0.8	70/110	T80C4	1.7
3.5	400	1241	0.8	63/110	T80C4	1.5
3.5	400	1241	0.8	50/110	T80C4	1
3.5	403	1344	1.7	CB150	T80C4	3.4
3.5	403	1297	1.1	CB130	T80C4	2.4
3.4	420	1426	2.6	CB180	T80C4	4.7
3.3	428	1456	3.5	CB215	T80C4	5.8
3.3	434	1371	2.3	CB180	T80C4	4.3
3.2	435	1530	5.3	CB250	T80C4	9.2
2.8	504	1530	1.3	CB150	T80C4	3
2.8	504	1501	0.9	CB130	T80C4	2.2
2.8	508	1602	3.9	CB250	T80C4	8.1
2.7	518	1730	3.1	CB215	T80C4	5.7
2.7	525	1625	2	CB180	T80C4	4.3
2.5	573	1742	3.8	CB250	T80C4	7.7
2.5	576	1715	1.1	CB150	T80C4	3
2.5	576	1680	0.8	CB130	T80C4	2.2
2.4	600	1752	2.7	CB215	T80C4	4.9
2.4	600	1824	1.7	CB180	T80C4	4.2
2.4	600	1538	1.2	70/130	T80C4	1.9
2.4	600	1538	1.2	63/130	T80C4	1.7
2.4	600	1574	0.6	63/110	T80C4	1.7
2.4	600	1574	0.6	50/110	T80C4	1.2
2.4	600	1574	0.6	70/110	T80C4	1.9
2	710	2154	3.1	CB250	T80C4	7.7
2	720	1973	0.9	CB150	T80C4	2.7
1.9	750	2191	2.1	CB215	T80C4	4.9
1.9	750	2057	1.3	CB180	T80C4	3.8
1.4	980	2569	1.5	85/180	T80C4	1.6
1.4	980	2567	1.1	85/150	T80C4	1.6
1.4	980	2452	0.7	63/130	T80C4	1
1.4	980	2452	0.7	70/130	T80C4	1.1
1.4	980	2510	0.7	85/130	T80C4	1.6
1	1372	3100	1.5	85/180	T80C4	1.6
1	1372	3020	1	85/150	T80C4	1.6
1	1372	2854	0.6	70/130	T80C4	1.1
1	1372	2854	0.6	85/130	T80C4	1.6
1	1372	2854	0.6	63/130	T80C4	1
0.72	1960	3969	1.2	85/180	T80C4	1.6
0.72	1960	3969	0.7	85/150	T80C4	1.6
0.5	2800	5210	0.9	85/180	T80C4	1.3
0.35	4000	6244	0.7	85/180	T80C4	1.1

1.7 - *Gearmotors*

n_2 min^{-1}	ir	T2 Nm	FS'		1.1 kW	Ptn kW
570	5	16.0	2.8	R50	T80B2	1.7
407	7	22.2	4.3	R70	T80B2	2.5
407	7	22.2	3.8	R63	T80B2	2.2
407	7	21.9	2.3	R50	T80B2	1.5
285	10	31.0	3.4	R70	T80B2	2.2
285	10	31.0	3.0	R63	T80B2	2.0
285	10	31.0	1.8	R50	T80B2	1.4
280	5	32.3	2.0	R50	T80D4	1.7
204	7	43.7	5.7	R85	T90S4	3.4
204	7	43.7	3.0	R70	T90S4	2.5
204	7	43.2	2.7	R63	T90S4	2.2
200	7	44.6	3.0	R70	T80D4	2.5
200	7	44.1	2.6	R63	T80D4	2.2
200	7	44.1	1.5	R50	T80D4	1.5
190	15	45.3	2.4	R70	T80B2	1.9
190	15	45.3	2.2	R63	T80B2	1.7
190	15	45.3	1.3	R50	T80B2	1.2
143	10	61.7	4.5	R85	T90S4	3.2
143	10	61.0	2.3	R70	T90S4	2.2
143	10	61.0	2.1	R63	T90S4	2.0
143	20	59.0	2.0	R70	T80B2	1.7
143	20	59.0	1.8	R63	T80B2	1.5
143	20	58.2	1.0	R50	T80B2	1.0
140	10	62.3	2.3	R70	T80D4	2.2
140	10	62.3	2.0	R63	T80D4	2.0
140	10	61.5	1.2	R50	T80D4	1.4
131	7	67.1	4.4	R85	T90L6	3.2
131	7	67.1	2.4	R70	T90L6	2.4
131	7	67.1	2.0	R63	T90L6	2.2
102	28	76.4	1.5	R70	T80B2	1.3
102	28	77.4	1.4	R63	T80B2	1.2
102	28	76.4	0.8	R50	T80B2	0.8
95	15	89.2	3.2	R85	T90S4	2.7
95	15	88.2	1.6	R70	T90S4	1.9
95	15	88.1	1.5	R63	T90S4	1.7
93	15	90.1	1.6	R70	T80D4	1.9
93	15	90.1	1.5	R63	T80D4	1.7
93	15	90.1	0.8	R50	T80D4	1.2
92	10	94.8	3.5	R85	T90L6	3.0
92	10	93.6	1.8	R70	T90L6	2.1
92	10	92.5	1.6	R63	T90L6	1.8
72	20	116.1	2.7	R85	T90S4	2.4
72	20	113.1	1.3	R70	T90S4	1.7
72	20	113.2	1.2	R63	T90S4	1.5
71	40	106.1	2.3	R85	T80B2	1.6
71	40	104.7	1.2	R70	T80B2	1.2
71	40	104.7	1.1	R63	T80B2	1.1
71	40	103.2	0.6	R50	T80B2	0.7
70	20	115.6	1.3	R70	T80D4	1.7
70	20	115.5	1.2	R63	T80D4	1.5
70	20	114.0	0.6	R50	T80D4	1.0
66	43	126.8	5.0	CB110	T80B2	4.2
66	43	125.2	2.7	CB85	T80B2	2.4
65	44	126.5	1.3	CB70	T80B2	1.8
61	15	135.3	2.5	R85	T90L6	2.4
61	15	133.6	1.3	R70	T90L6	1.7
61	15	133.6	1.1	R63	T90L6	1.6
58	49	126.4	1.8	R85	T80B2	1.6
58	49	122.8	1.1	R70	T80B2	1.1
58	49	124.6	0.8	R63	T80B2	1.0
56	51	150.4	4.2	CB110	T80B2	4.2
56	51	148.5	2.2	CB85	T80B2	2.4
56	51	146.7	1.2	CB70	T80B2	1.8
51	28	148.1	1.9	R85	T90S4	1.8
51	28	146.1	1.0	R70	T90S4	1.3
51	28	146.0	0.9	R63	T90S4	1.2
51	56	144.5	1.5	R85	T80B2	1.6
51	56	138.3	1.0	R70	T80B2	1.0
51	56	138.4	0.7	R63	T80B2	0.9
50	28	149.2	1.0	R70	T80D4	1.3
50	28	149.1	0.9	R63	T80D4	1.2
48	59	174.0	3.9	CB110	T80B2	4.2
48	59	171.8	2.1	CB85	T80B2	2.4
48	59	169.6	1.1	CB70	T80B2	1.8
46	20	175.9	2.1	R85	T90L6	2.2
46	20	171.3	1.0	R70	T90L6	1.5
46	20	171.2	0.9	R63	T90L6	1.4
41	69	201.0	3.6	CB110	T80B2	4.2
41	69	198.4	1.9	CB85	T80B2	2.4
41	70	170.4	1.2	R85	T80B2	1.3
41	70	198.8	1.0	CB70	T80B2	1.8
41	70	160.0	0.8	R70	T80B2	0.9

1.7 - Getriebemotoren

n_2 min^{-1}	ir	T2 Nm	FS'		1.1 kW	Ptn kW
40	72	207.0	6.2	CB130	T80B2	5.1
36	40	229.2	6.0	CB130	T90S4	5.1
36	40	211.6	3.0	R110	T90S4	3.0
36	40	202.7	1.5	R85	T90S4	1.6
36	40	196.9	0.8	R70	T90S4	1.2
36	40	196.9	0.7	R63	T90S4	1.1
36	80	212.3	3.1	CB110	T80B2	3.2
36	80	203.5	1.6	CB85	T80B2	1.7
36	80	185.7	1.0	R85	T80B2	1.2
36	80	177.1	0.6	R70	T80B2	0.8
35	40	234.1	5.9	CB130	T80D4	5.1
35	40	207.1	1.5	R85	T80D4	1.6
35	40	201.1	0.8	R70	T80D4	1.2
35	40	201.1	0.7	R63	T80D4	1.1
34	83	208.0	0.8	CB70	T80B2	1.3
34	85	231.8	5.2	CB130	T80B2	4.3
33	43	246.3	3.1	CB110	T90S4	3.8
33	43	243.2	1.7	CB85	T90S4	2.2
33	28	220.6	1.4	R85	T90L6	1.6
33	28	217.4	0.8	R70	T90L6	1.2
33	28	217.5	0.7	R63	T90L6	1.1
33	43	251.7	3.1	CB110	T80D4	3.8
33	43	248.5	1.6	CB85	T80D4	2.2
33	44	245.6	0.8	CB70	T90S4	1.6
32	44	250.8	0.8	CB70	T80D4	1.6
29	49	248.4	2.3	R110	T90S4	2.7
29	49	234.0	1.2	R85	T90S4	1.6
29	50	286.5	5.1	CB130	T90S4	5.1
29	49	239.0	1.2	R85	T80D4	1.6
29	49	235.3	0.7	R70	T80D4	1.1
29	100	217.5	0.8	R85	T80B2	1.1
28	51	292.2	2.6	CB110	T90S4	3.8
28	51	288.4	1.4	CB85	T90S4	2.2
28	51	284.7	0.7	CB70	T90S4	1.6
28	50	292.6	5.0	CB130	T80D4	5.1
27	51	298.5	2.6	CB110	T80D4	3.8
27	51	294.7	1.4	CB85	T80D4	2.2
27	51	291.0	0.7	CB70	T80D4	1.6
26	110	291.9	2.4	CB110	T80B2	3.2
26	110	275.6	1.2	CB85	T80B2	1.7
26	110	271.6	0.7	CB70	T80B2	1.3
26	56	283.9	1.6	R110	T90S4	2.7
26	56	271.4	1.0	R85	T90S4	1.6
25	56	277.5	1.0	R85	T80D4	1.6
25	56	260.6	0.6	R70	T80D4	1.0
25	115	317.9	6.5	CB150	T80B2	5.9
25	115	309.4	4.2	CB130	T80B2	4.2
25	58	328.0	4.4	CB130	T90S4	4.9
24	59	329.4	2.7	CB110	T90S4	3.8
24	59	325.0	1.4	CB85	T90S4	2.2
24	59	320.5	0.7	CB70	T90S4	1.6
24	58	335.1	4.3	CB130	T80D4	4.9
24	59	336.5	2.6	CB110	T80D4	3.8
24	59	331.9	1.4	CB85	T80D4	2.2
24	59	327.5	0.7	CB70	T80D4	1.6
23	40	356.2	6.6	CB150	T90L6	6.7
23	40	351.7	4.4	CB130	T90L6	4.7
23	40	310.6	2.4	R110	T90L6	2.6
23	40	301.5	1.2	R85	T90L6	1.5
23	40	292.3	0.6	R70	T90L6	1.1
22	129	337.6	2.2	CB110	T80B2	3.2
22	129	318.6	1.1	CB85	T80B2	1.7
22	130	316.4	0.6	CB70	T80B2	1.3
21	43	373.0	2.4	CB110	T90L6	3.8
21	43	368.3	1.2	CB85	T90L6	2.2
21	44	372.0	0.6	CB70	T90L6	1.6
21	69	385.4	2.3	CB110	T90S4	3.8
21	69	380.1	1.2	CB85	T90S4	2.2
20	70	329.2	1.5	R110	T90S4	2.3
20	70	313.8	0.8	R85	T90S4	1.3
20	70	380.8	0.6	CB70	T90S4	1.6
20	69	393.5	2.2	CB110	T80D4	3.8
20	69	388.4	1.2	CB85	T80D4	2.2
20	70	320.4	0.8	R85	T80D4	1.3
20	70	388.8	0.6	CB70	T80D4	1.6
20	72	407.3	5.8	CB150	T90S4	6.4
20	72	402.0	3.8	CB130	T90S4	4.7
20	144	392.8	5.6	CB150	T80B2	5.7
20	144	382.2	3.6	CB130	T80B2	4.0
19.4	72	416.1	5.6	CB150	T80D4	6.4

1.7 - Motoriduttori

n_2 min^{-1}	ir	T2 Nm	FS'		1.1 kW	Ptn kW
19.4	72	410.7	3.7	CB130	T80D4	4.7
18.8	49	369.3	1.8	R110	T90L6	2.5
18.8	49	346.6	0.9	R85	T90L6	1.3
18.4	50	439.6	5.6	CB150	T90L6	6.4
18.4	50	439.6	3.7	CB130	T90L6	4.5
18.0	51	430.9	2.3	CB110	T90L6	3.4
18.0	51	425.0	1.2	CB85	T90L6	2.0
17.9	80	405.4	2.0	CB110	T90S4	2.9
17.9	80	364.2	1.3	R110	T90S4	2.2
17.9	80	382.0	1.0	CB85	T90S4	1.5
17.9	80	340.9	0.7	R85	T90S4	1.2
17.6	162	400.2	4.6	CB150	T80B2	4.5
17.6	162	388.2	3.0	CB130	T80B2	3.2
17.5	80	414.2	1.9	CB110	T80D4	2.9
17.5	80	390.2	1.0	CB85	T80D4	1.5
17.5	80	348.0	0.7	R85	T80D4	1.2
17.0	168	408.7	1.6	CB110	T80B2	2.6
17.0	168	384.2	0.9	CB85	T80B2	1.4
16.8	85	455.9	5.0	CB150	T90S4	5.5
16.8	85	449.6	3.2	CB130	T90S4	4.0
16.5	85	465.6	4.9	CB150	T80D4	5.5
16.5	85	459.3	3.1	CB130	T80D4	4.0
16.4	56	409.2	1.3	R110	T90L6	2.3
16.4	56	396.2	0.8	R85	T90L6	1.3
16.4	174	436.1	6.4	CB180	T80B2	6.4
15.9	58	503.4	4.9	CB150	T90L6	6.2
15.9	58	503.4	3.2	CB130	T90L6	4.3
15.6	59	498.6	2.0	CB110	T90L6	3.4
15.6	59	491.9	1.0	CB85	T90L6	2.0
14.8	62	545.1	6.5	CB180	T90L6	8.9
14.3	100	418.9	1.1	R110	T90S4	1.9
14.1	202	491.4	4.0	CB150	T80B2	4.4
14.1	202	476.5	2.6	CB130	T80B2	3.1
13.4	213	510.4	5.5	CB180	T80B2	5.8
13.4	107	574.0	6.1	CB180	T90S4	7.6
13.3	69	583.3	1.7	CB110	T90L6	3.4
13.3	69	575.3	0.9	CB85	T90L6	2.0
13.1	70	479.5	1.1	R110	T90L6	2.1
13.1	70	455.6	0.7	R85	T90L6	1.2
13.1	107	586.3	6.0	CB180	T80D4	7.6
13.0	110	533.4	1.7	CB110	T90S4	2.9
13.0	110	501.2	0.9	CB85	T90S4	1.5
12.8	72	616.5	4.2	CB150	T90L6	5.9
12.8	72	616.6	2.8	CB130	T90L6	4.2
12.7	110	544.5	1.6	CB110	T80D4	2.9
12.7	110	511.4	0.8	CB85	T80D4	1.5
12.7	225	530.8	1.4	CB110	T80B2	2.5
12.7	225	497.7	0.7	CB85	T80B2	1.4
12.4	115	608.5	4.0	CB150	T90S4	5.3
12.4	115	600.0	2.6	CB130	T90S4	3.9
12.3	231	544.8	3.6	CB150	T80B2	4.1
12.3	231	527.8	2.4	CB130	T80B2	3.0
12.3	75	650.7	5.7	CB180	T90L6	8.5
12.2	115	621.5	4.0	CB150	T80D4	5.3
12.2	115	613.0	2.5	CB130	T80D4	3.9
11.5	124	656.0	5.6	CB180	T90S4	7.3
11.5	80	603.1	1.5	CB110	T90L6	2.9
11.5	80	529.6	1.1	R110	T90L6	2.0
11.5	80	566.4	0.8	CB85	T90L6	1.5
11.5	248	585.1	5.0	CB180	T80B2	5.7
11.3	124	669.9	5.4	CB180	T80D4	7.3
11.1	129	625.2	1.4	CB110	T90S4	2.9
11.1	129	587.5	0.7	CB85	T90S4	1.5
10.9	261	606.1	4.7	CB180	T80B2	5.5
10.9	129	638.9	1.4	CB110	T80D4	2.9
10.9	129	600.1	0.7	CB85	T80D4	1.5
10.8	85	699.1	5.3	CB180	T90L6	7.3
10.8	85	699.1	3.6	CB150	T90L6	5.3
10.8	85	679.6	2.4	CB130	T90L6	3.5
10.2	140	668.8	5.6	85/180	T90S4	3.4
10.2	140	658.4	4.0	85/150	T90S4	3.4
10.2	140	627.7	2.6	63/130	T90S4	2.2
10.2	140	638.0	2.6	85/130	T90S4	3.4
10.2	140	638.0	2.6	70/130	T90S4	2.5
10.2	140	617.3	1.6	63/110	T90S4	2.2
10.2	140	627.5	1.6	70/110	T90S4	2.5
10.2	140	627.5	1.6	85/110	T90S4	2.5
10.2	140	617.3	0.8	70/85	T90S4	2.5
10.2	140	617.3	0.8	63/85	T90S4	2.2
10.0	140	640.7	2.6	63/130	T80D4	2.2

1.7 - *Gearmotors*

n_2 min^{-1}	ir	T2 Nm	FS'		1.1 kW	Ptn kW
10.0	140	651.2	2.5	70/130	T80D4	2.5
10.0	140	630.4	1.6	50/110	T80D4	1.5
10.0	140	630.4	1.6	63/110	T80D4	2.2
10.0	140	640.7	1.6	70/110	T80D4	2.5
10.0	140	630.0	0.8	50/85	T80D4	1.5
10.0	140	630.0	0.8	70/85	T80D4	2.5
10.0	140	630.0	0.8	63/85	T80D4	2.2
10.0	286	558.3	0.9	CB110	T80B2	1.9
9.9	144	751.0	3.4	CB150	T90S4	5.1
9.9	144	740.4	2.2	CB130	T90S4	3.7
9.9	288	657.8	3.2	CB150	T80B2	3.9
9.9	288	647.4	2.1	CB130	T80B2	2.9
9.7	144	767.4	3.4	CB150	T80D4	5.1
9.7	144	756.7	2.2	CB130	T80D4	3.7
9.5	150	793.6	4.8	CB180	T90S4	7.3
9.5	300	729.9	6.4	CB215	T80B2	7.4
9.4	304	694.4	4.3	CB180	T80B2	5.4
9.3	150	810.7	4.7	CB180	T80D4	7.3
9.2	100	605.4	0.8	R110	T90L6	1.8
8.8	162	749.6	3.0	CB150	T90S4	4.0
8.8	162	737.8	1.9	CB130	T90S4	3.0
8.8	323	726.5	2.5	CB150	T80B2	3.8
8.8	323	702.7	1.6	CB130	T80B2	2.7
8.6	162	766.1	2.9	CB150	T80D4	4.0
8.6	162	753.8	1.8	CB130	T80D4	3.0
8.6	107	867.4	4.5	CB180	T90L6	7.0
8.5	168	765.1	1.0	CB110	T90S4	2.3
8.4	110	791.4	1.3	CB110	T90L6	2.4
8.4	110	741.6	0.6	CB85	T90L6	1.3
8.3	168	781.7	1.0	CB110	T80D4	2.3
8.3	342	668.2	0.8	CB110	T80B2	1.9
8.2	174	830.6	4.0	CB180	T90S4	5.8
8.1	174	848.2	3.9	CB180	T80D4	5.8
8.0	115	919.2	3.0	CB150	T90L6	4.9
8.0	115	906.0	1.9	CB130	T90L6	3.4
7.7	368	827.8	3.8	CB180	T80B2	5.2
7.6	375	870.9	5.4	CB215	T80B2	6.8
7.4	124	1005	4.0	CB180	T90L6	7.0
7.2	394	755.3	0.7	CB110	T80B2	1.9
7.2	200	910.9	4.5	85/180	T90S4	3.2
7.2	200	896.2	3.2	85/150	T90S4	3.2
7.2	200	866.9	2.1	63/130	T90S4	2.0
7.2	200	866.9	2.1	70/130	T90S4	2.2
7.2	200	881.6	2.0	85/130	T90S4	3.2
7.2	200	866.8	1.2	70/110	T90S4	2.2
7.2	200	866.8	1.2	63/110	T90S4	2.0
7.2	200	881.4	1.1	85/110	T90S4	2.2
7.1	129	928.3	1.1	CB110	T90L6	2.4
7.1	202	920.1	2.5	CB150	T90S4	3.9
7.1	202	904.9	1.6	CB130	T90S4	2.9
7.1	403	891.5	2.1	CB150	T80B2	3.7
7.1	403	862.1	1.3	CB130	T80B2	2.7
7.0	200	885.5	2.0	70/130	T80D4	2.2
7.0	200	885.5	2.0	63/130	T80D4	2.0
7.0	200	870.3	1.1	50/110	T80D4	1.4
7.0	200	885.7	1.1	70/110	T80D4	2.2
7.0	200	885.7	1.1	63/110	T80D4	2.0
6.9	202	940.0	2.5	CB150	T80D4	3.9
6.9	202	924.7	1.6	CB130	T80D4	2.9
6.8	420	943.9	3.3	CB180	T80B2	5.2
6.7	213	1002	5.1	CB215	T90S4	7.0
6.7	213	955	3.5	CB180	T90S4	5.2
6.7	428	962	4.5	CB215	T80B2	6.4
6.6	213	1023	5.0	CB215	T80D4	7.0
6.6	213	975	3.4	CB180	T80D4	5.2
6.6	434	911	2.9	CB180	T80B2	4.7
6.4	144	1151	2.5	CB150	T90L6	4.9
6.4	144	1118	1.6	CB130	T90L6	3.3
6.4	225	975	0.9	CB110	T90S4	2.3
6.3	146	1184	5.8	CB215	T90L6	8.6
6.2	225	996	0.9	CB110	T80D4	2.3
6.2	460	864	0.6	CB110	T80B2	1.9
6.2	231	1018	2.3	CB150	T90S4	3.7
6.2	231	985	1.5	CB130	T90S4	2.7
6.1	150	1200	3.5	CB180	T90L6	6.8
6.1	231	1040	2.3	CB150	T80D4	3.7
6.1	231	1006	1.5	CB130	T80D4	2.7
5.8	248	1147	4.6	CB215	T90S4	6.8
5.8	248	1092	3.2	CB180	T90S4	5.1
5.7	162	1128	2.2	CB150	T90L6	3.8

1.7 - Getriebemotoren

n_2 min^{-1}	ir	T2 Nm	FS'		1.1 kW	Ptn kW
5.7	162	1092	1.4	CB130	T90L6	2.6
5.7	248	1171	4.5	CB215	T80D4	6.8
5.7	248	1116	3.1	CB180	T80D4	5.1
5.7	504	1023	1.7	CB150	T80B2	3.3
5.7	504	1004	1.2	CB130	T80B2	2.4
5.6	508	1067	4.9	CB250	T80B2	8.8
5.5	518	1146	4.0	CB215	T80B2	6.3
5.5	261	1131	3.0	CB180	T90S4	5.0
5.5	168	1074	0.9	CB110	T90L6	2.0
5.4	525	1083	2.6	CB180	T80B2	4.6
5.4	267	1196	4.3	CB215	T90S4	6.4
5.4	261	1157	2.9	CB180	T80D4	5.0
5.3	174	1251	4.9	CB215	T90L6	6.8
5.3	174	1251	2.9	CB180	T90L6	5.5
5.2	267	1223	4.2	CB215	T80D4	6.4
5.1	280	1131	3.3	85/180	T90S4	3.2
5.1	280	1090	2.3	85/150	T90S4	3.2
5.1	280	1048	1.5	63/130	T90S4	2.0
5.1	280	1048	1.5	85/130	T90S4	3.2
5.1	280	1048	1.5	70/130	T90S4	2.2
5.1	280	1049	1.0	85/110	T90S4	2.2
5.1	280	1049	1.0	70/110	T90S4	2.2
5.1	280	1049	1.0	63/110	T90S4	2.0
5.0	280	1071	1.5	70/130	T80D4	2.2
5.0	280	1071	1.5	63/130	T80D4	2.0
5.0	280	1051	1.0	50/110	T80D4	1.4
5.0	280	1071	0.9	70/110	T80D4	2.2
5.0	280	1071	0.9	63/110	T80D4	2.0
5.0	573	1163	4.9	CB250	T80B2	8.4
5.0	288	1247	2.0	CB150	T90S4	3.6
5.0	288	1205	1.3	CB130	T90S4	2.6
5.0	576	1125	1.4	CB150	T80B2	3.2
5.0	576	1104	1.0	CB130	T80B2	2.3
4.9	290	1321	6.5	CB250	T90S4	11
4.9	288	1275	1.9	CB150	T80D4	3.6
4.9	288	1232	1.3	CB130	T80D4	2.6
4.8	290	1348	6.3	CB250	T80D4	11
4.8	300	1365	4.0	CB215	T90S4	6.6
4.8	600	1172	3.5	CB215	T80B2	5.3
4.8	600	1194	2.2	CB180	T80B2	4.4
4.7	304	1297	2.7	CB180	T90S4	4.9
4.7	300	1395	4.0	CB215	T80D4	6.6
4.6	304	1322	2.7	CB180	T80D4	4.9
4.6	202	1385	1.9	CB150	T90L6	3.7
4.6	202	1339	1.2	CB130	T90L6	2.5
4.4	207	1491	6.1	CB250	T90L6	11
4.4	323	1376	1.5	CB150	T90S4	3.5
4.4	323	1328	1.0	CB130	T90S4	2.5
4.3	323	1407	1.5	CB150	T80D4	3.5
4.3	323	1358	1.0	CB130	T80D4	2.5
4.3	213	1508	3.7	CB215	T90L6	6.6
4.3	213	1435	2.6	CB180	T90L6	5.0
4.1	225	1439	0.7	CB110	T90L6	2.0
4.0	710	1441	3.9	CB250	T80B2	8.4
4.0	231	1531	1.7	CB150	T90L6	3.5
4.0	231	1478	1.1	CB130	T90L6	2.4
4.0	360	1614	5.5	CB250	T90S4	9.7
4.0	720	1327	1.1	CB150	T80B2	3.0
4.0	720	1274	0.8	CB130	T80B2	2.2
3.9	360	1647	5.4	CB250	T80D4	9.7
3.9	368	1539	2.4	CB180	T90S4	4.7
3.8	240	1728	5.4	CB250	T90L6	10
3.8	375	1627	3.4	CB215	T90S4	6.1
3.8	750	1465	2.7	CB215	T80B2	5.3
3.8	368	1576	2.3	CB180	T80D4	4.7
3.8	750	1382	1.7	CB180	T80B2	4.1
3.7	375	1662	3.3	CB215	T80D4	6.1
3.7	248	1727	3.4	CB215	T90L6	6.4
3.7	248	1642	2.3	CB180	T90L6	4.9
3.6	400	1644	2.7	85/180	T90S4	2.4
3.6	400	1614	1.8	85/150	T90S4	2.4
3.6	400	1497	1.2	63/130	T90S4	1.5
3.6	400	1555	1.2	70/130	T90S4	1.7
3.6	400	1614	1.1	85/130	T90S4	2.4
3.6	400	1526	0.7	63/110	T90S4	1.5
3.6	400	1526	0.7	70/110	T90S4	1.7
3.6	400	1585	0.6	85/110	T90S4	1.7
3.6	403	1658	1.3	CB150	T90S4	3.4
3.6	403	1598	0.9	CB130	T90S4	2.4
3.5	261	1701	2.2	CB180	T90L6	4.7

1.7 - Motoriduttori

n_2 min^{-1}	ir	T2 Nm	FS'		1.1 kW	Ptn kW
3.5	400	1530	1.2	63/130	T80D4	1.5
3.5	400	1590	1.1	70/130	T80D4	1.7
3.5	400	1560	0.6	70/110	T80D4	1.7
3.5	400	1560	0.6	50/110	T80D4	1.0
3.5	400	1560	0.6	63/110	T80D4	1.5
3.5	403	1696	1.3	CB150	T80D4	3.4
3.5	403	1635	0.8	CB130	T80D4	2.4
3.5	267	1766	3.2	CB215	T90L6	6.0
3.4	420	1761	2.1	CB180	T90S4	4.7
3.3	428	1793	2.8	CB215	T90S4	5.8
3.3	420	1798	2.0	CB180	T80D4	4.7
3.3	435	1884	4.3	CB250	T90S4	9.2
3.3	434	1692	1.9	CB180	T90S4	4.3
3.3	428	1831	2.8	CB215	T80D4	5.8
3.2	434	1724	1.8	CB180	T80D4	4.3
3.2	435	1925	4.2	CB250	T80D4	9.2
3.2	288	1877	1.4	CB150	T90L6	3.4
3.2	288	1811	0.9	CB130	T90L6	2.3
3.2	290	1988	4.7	CB250	T90L6	10
3.1	300	2053	2.9	CB215	T90L6	6.3
3.0	304	1941	2.0	CB180	T90L6	4.6
2.9	323	2027	1.1	CB150	T90L6	3.3
2.9	323	1953	0.7	CB130	T90L6	2.2
2.8	504	1887	1.1	CB150	T90S4	3.0
2.8	504	1850	0.7	CB130	T90S4	2.2
2.8	508	1982	3.1	CB250	T90S4	8.1
2.8	504	1927	1.0	CB150	T80D4	3.0
2.8	504	1890	0.7	CB130	T80D4	2.2
2.8	508	2017	3.1	CB250	T80D4	8.1
2.8	518	2131	2.5	CB215	T90S4	5.7
2.7	525	2008	1.6	CB180	T90S4	4.3
2.7	518	2179	2.4	CB215	T80D4	5.7
2.7	525	2046	1.6	CB180	T80D4	4.3
2.6	360	2421	4.0	CB250	T90L6	9.2
2.5	573	2143	3.1	CB250	T90S4	7.7
2.5	368	2311	1.7	CB180	T90L6	4.5
2.5	576	2118	0.9	CB150	T90S4	3.0
2.5	576	2075	0.6	CB130	T90S4	2.2
2.5	375	2444	2.5	CB215	T90L6	5.8
2.4	573	2196	3.0	CB250	T80D4	7.7
2.4	576	2162	0.9	CB150	T80D4	3.0
2.4	576	2119	0.6	CB130	T80D4	2.2
2.4	600	2163	2.2	CB215	T90S4	4.9
2.4	600	2030	2.0	85/180	T90S4	2.7
2.4	600	1986	1.5	85/150	T90S4	2.7
2.4	600	2252	1.4	CB180	T90S4	4.2
2.4	600	1898	0.9	63/130	T90S4	1.7
2.4	600	1898	0.9	70/130	T90S4	1.9
2.4	600	1941	0.9	85/130	T90S4	2.7
2.3	600	2209	2.2	CB215	T80D4	4.9
2.3	600	2300	1.3	CB180	T80D4	4.2
2.3	600	1939	0.9	70/130	T80D4	1.9
2.3	600	1939	0.9	63/130	T80D4	1.7
2.3	403	2488	1.0	CB150	T90L6	3.2
2.3	403	2396	0.6	CB130	T90L6	2.2
2.2	420	2639	1.5	CB180	T90L6	4.5
2.2	428	2639	2.1	CB215	T90L6	5.4
2.1	434	2526	1.4	CB180	T90L6	4.2
2.1	435	2838	3.1	CB250	T90L6	8.8
2.0	710	2665	2.5	CB250	T90S4	7.7
2.0	720	2427	0.7	CB150	T90S4	2.7
2.0	710	2720	2.4	CB250	T80D4	7.7
1.9	720	2492	0.7	CB150	T80D4	2.7
1.9	750	2695	1.7	CB215	T90S4	4.9
1.9	750	2529	1.1	CB180	T90S4	3.8
1.9	750	2753	1.6	CB215	T80D4	4.9
1.9	750	2584	1.0	CB180	T80D4	3.8
1.8	504	2812	0.8	CB150	T90L6	2.9
1.8	508	2960	2.3	CB250	T90L6	7.7
1.8	518	3127	1.8	CB215	T90L6	5.3
1.8	525	3001	1.2	CB180	T90L6	4.1
1.6	573	3197	2.3	CB250	T90L6	7.4
1.6	576	3084	0.7	CB150	T90L6	2.8
1.5	600	3227	1.6	CB215	T90L6	4.7
1.5	600	3296	1.0	CB180	T90L6	3.9
1.5	956	3362	2.1	110/215	T90S4	2.7
1.5	980	3382	1.4	110/180	T90S4	2.7
1.5	980	3165	1.2	85/180	T90S4	1.6
1.5	980	3165	0.9	85/150	T90S4	1.6
1.5	980	3383	0.9	110/150	T90S4	2.7

1.7 - *Gearmotors*

n_2 min^{-1}	ir	T2 Nm	FS'		1.1 kW	Ptn kW
1.4	980	3233	1.2	85/180	T80D4	1.6
1.4	980	3232	0.9	85/150	T80D4	1.6
1.3	710	3797	1.9	CB250	T90L6	7.2
1.2	750	4013	1.2	CB215	T90L6	4.7
1.2	750	3757	0.8	CB180	T90L6	3.6
1.0	1372	4748	1.5	110/215	T90S4	2.7
1.0	1372	3839	1.2	85/180	T90S4	1.6
1.0	1372	4042	1.1	110/180	T90S4	2.7
1.0	1372	3735	0.8	85/150	T90S4	1.6
1.0	1372	3938	0.7	110/150	T90S4	2.7
1.0	1372	3913	1.2	85/180	T80D4	1.6
1.0	1372	3811	0.8	85/150	T80D4	1.6
0.73	1960	5613	1.3	110/215	T90S4	2.7
0.73	1960	4894	0.9	85/180	T90S4	1.6
0.73	1960	5179	0.9	110/180	T90S4	2.7
0.71	1960	5030	0.9	85/180	T80D4	1.6
0.51	2800	7207	1.0	110/215	T90S4	2.3
0.51	2800	6389	0.7	85/180	T90S4	1.3
0.51	2800	6589	0.7	110/180	T90S4	2.3
0.50	2800	6512	0.7	85/180	T80D4	1.3
0.36	4000	9041	0.8	110/215	T90S4	1.9
0.25	5700	11347	0.6	110/215	T90S4	1.9

1.7 - Getriebemotoren

n_2 min^{-1}	ir	T2 Nm	FS'		1.5 kW	Ptn kW
574	5	22	3.6	R63	T80C2	2.5
574	5	21.7	2.1	R50	T80C2	1.7
411	7	29.9	5.9	R85	T90S2	3.4
411	7	29.9	3.2	R70	T90S2	2.5
411	7	29.9	2.8	R63	T90S2	2.2
410	7	30.1	3.2	R70	T80C2	2.5
410	7	30.1	2.8	R63	T80C2	2.2
410	7	29.7	1.7	R50	T80C2	1.5
288	10	42.3	4.8	R85	T90S2	3.2
288	10	41.8	2.5	R70	T90S2	2.2
288	10	41.8	2.2	R63	T90S2	2.0
287	10	41.9	2.5	R70	T80C2	2.2
287	10	41.9	2.2	R63	T80C2	2.0
287	10	41.9	1.3	R50	T80C2	1.4
286	5	43.1	2.6	R63	T90L4	2.5
204	7	59.6	4.1	R85	T90L4	3.4
204	7	59.6	2.2	R70	T90L4	2.5
204	7	58.9	2.0	R63	T90L4	2.2
192	15	61.2	3.4	R85	T90S2	2.7
192	15	61.2	1.8	R70	T90S2	1.9
192	15	61.2	1.6	R63	T90S2	1.7
191	15	61.4	1.8	R70	T80C2	1.9
191	15	61.4	1.6	R63	T80C2	1.7
191	15	61.4	0.9	R50	T80C2	1.2
144	20	80.6	2.9	R85	T90S2	2.4
144	20	79.6	1.4	R70	T90S2	1.7
144	20	79.6	1.3	R63	T90S2	1.5
144	20	79.9	1.4	R70	T80C2	1.7
144	20	79.9	1.3	R63	T80C2	1.5
144	20	78.9	0.7	R50	T80C2	1.0
143	10	84.2	3.3	R85	T90L4	3.2
143	10	83.1	1.7	R70	T90L4	2.2
143	10	83.2	1.5	R63	T90L4	2.0
134	7	90.7	6.4	R110	T100A6	5.6
134	7	89.6	3.3	R85	T90LB6	3.2
134	7	89.6	3.3	R85	T100A6	3.2
134	7	89.6	1.8	R70	T100A6	2.4
134	7	89.6	1.8	R70	T90LB6	2.4
134	7	89.6	1.5	R63	T90LB6	2.2
103	28	104.4	2.0	R85	T90S2	1.8
103	28	103.0	1.1	R70	T90S2	1.3
103	28	104.4	1.0	R63	T90S2	1.2
103	28	103.4	1.1	R70	T80C2	1.3
103	28	104.8	1.0	R63	T80C2	1.2
95	15	121.7	2.3	R85	T90L4	2.7
95	15	120.2	1.2	R70	T90L4	1.9
95	15	120.2	1.1	R63	T90L4	1.7
94	10	128.0	5.0	R110	T100A6	5.2
94	10	126.5	2.6	R85	T90LB6	3.0
94	10	126.5	2.6	R85	T100A6	3.0
94	10	124.9	1.3	R70	T100A6	2.1
94	10	124.9	1.3	R70	T90LB6	2.1
94	10	123.4	1.2	R63	T90LB6	1.8
72	40	147.2	3.3	R110	T90S2	3.0
72	40	143.3	1.7	R85	T90S2	1.6
72	40	141.3	0.9	R70	T90S2	1.2
72	40	141.2	0.8	R63	T90S2	1.1
72	40	143.8	1.7	R85	T80C2	1.6
72	40	141.8	0.9	R70	T80C2	1.2
72	40	141.7	0.8	R63	T80C2	1.1
72	20	158.3	2.0	R85	T90L4	2.4
72	20	154.3	1.0	R70	T90L4	1.7
72	20	154.3	0.9	R63	T90L4	1.5
67	43	171.1	3.7	CB110	T90S2	4.2
67	43	169.0	2.0	CB85	T90S2	2.4
67	43	171.7	3.7	CB110	T80C2	4.2
67	43	169.6	2.0	CB85	T80C2	2.4
65	44	170.7	1.0	CB70	T90S2	1.8
65	44	171.3	1.0	CB70	T80C2	1.8
63	15	189.7	5.2	R130	T100A6	6.4
63	15	182.9	3.5	R110	T100A6	4.2
63	15	180.6	1.8	R85	T90LB6	2.4
63	15	180.6	1.8	R85	T100A6	2.4
63	15	178.3	1.0	R70	T100A6	1.7
63	15	178.3	1.0	R70	T90LB6	1.7
63	15	178.3	0.9	R63	T90LB6	1.6
59	49	175.5	2.6	R110	T90S2	2.7
59	49	170.6	1.3	R85	T90S2	1.6
59	49	171.2	1.3	R85	T80C2	1.6
59	49	166.2	0.8	R70	T80C2	1.1
58	50	196.5	6.1	CB130	T90S2	5.3
57	50	197.2	6.1	CB130	T80C2	5.3
56	51	203.0	3.1	CB110	T90S2	4.2

1.7 - Motoriduttori

n_2 min^{-1}	ir	T2 Nm	FS'		1.5 kW	Ptn kW
56	51	200.4	1.7	CB85	T90S2	2.4
56	51	197.8	0.9	CB70	T90S2	1.8
56	51	203.7	3.1	CB110	T80C2	4.2
56	51	201.1	1.7	CB85	T80C2	2.4
56	51	198.6	0.9	CB70	T80C2	1.8
51	56	197.8	1.8	R110	T90S2	2.7
51	56	194.9	1.1	R85	T90S2	1.6
51	56	195.6	1.1	R85	T80C2	1.6
51	56	187.3	0.7	R70	T80C2	1.0
51	28	201.9	1.4	R85	T90L4	1.8
51	28	199.2	0.7	R70	T90L4	1.3
51	28	199.1	0.7	R63	T90L4	1.2
50	58	227.9	5.2	CB130	T90S2	5.3
49	58	228.7	5.2	CB130	T80C2	5.3
49	59	234.8	2.9	CB110	T90S2	4.2
49	59	231.9	1.5	CB85	T90S2	2.4
49	59	228.9	0.8	CB70	T90S2	1.8
49	59	235.6	2.9	CB110	T80C2	4.2
49	59	232.7	1.5	CB85	T80C2	2.4
49	59	229.7	0.8	CB70	T80C2	1.8
47	20	249.9	4.3	R130	T100A6	6.0
47	20	240.8	3.0	R110	T100A6	4.0
47	20	234.7	1.5	R85	T90LB6	2.2
47	20	234.7	1.5	R85	T100A6	2.2
47	20	228.7	0.8	R70	T90LB6	1.5
47	20	228.5	0.7	R63	T90LB6	1.4
42	69	271.2	2.7	CB110	T90S2	4.2
42	69	267.7	1.4	CB85	T90S2	2.4
42	69	272.1	2.7	CB110	T80C2	4.2
42	69	268.7	1.4	CB85	T80C2	2.4
41	70	236.7	1.6	R110	T90S2	2.3
41	70	229.7	0.9	R85	T90S2	1.3
41	70	268.1	0.7	CB70	T90S2	1.8
41	70	230.6	0.9	R85	T80C2	1.3
41	70	269.1	0.7	CB70	T80C2	1.8
40	72	279.3	4.6	CB130	T90S2	5.1
40	72	280.3	4.6	CB130	T80C2	5.1
36	80	286.5	2.3	CB110	T90S2	3.2
36	80	262.6	1.5	R110	T90S2	2.2
36	80	274.5	1.2	CB85	T90S2	1.7
36	80	250.6	0.8	R85	T90S2	1.2
36	80	287.5	2.3	CB110	T80C2	3.2
36	80	275.5	1.2	CB85	T80C2	1.7
36	80	251.5	0.8	R85	T80C2	1.2
36	40	312.5	4.4	CB130	T90L4	5.1
36	40	288.5	2.2	R110	T90L4	3.0
36	40	276.4	1.1	R85	T90L4	1.6
36	40	268.5	0.6	R70	T90L4	1.2
35	83	280.8	0.6	CB70	T90S2	1.3
35	83	281.8	0.6	CB70	T80C2	1.3
34	85	321.3	5.9	CB150	T90S2	6.2
34	85	312.9	3.8	CB130	T90S2	4.3
34	85	322.5	5.9	CB150	T80C2	6.2
34	85	314.0	3.8	CB130	T80C2	4.3
34	28	315.8	4.8	R150	T100A6	5.7
34	28	320.1	2.9	R130	T100A6	4.3
34	28	307.2	2.2	R110	T100A6	3.0
34	28	294.5	1.1	R85	T90LB6	1.6
34	28	294.5	1.1	R85	T100A6	1.6
33	43	335.9	2.3	CB110	T90L4	3.8
33	43	331.6	1.2	CB85	T90L4	2.2
33	44	335.0	0.6	CB70	T90L4	1.6
29	49	338.7	1.7	R110	T90L4	2.7
29	49	319.1	0.9	R85	T90L4	1.6
29	100	308.3	1.2	R110	T90S2	1.9
29	50	390.7	5.7	CB150	T90L4	6.7
29	50	390.7	3.7	CB130	T90L4	5.1
28	51	398.4	1.9	CB110	T90L4	3.8
28	51	393.3	1.0	CB85	T90L4	2.2
26	110	394.0	1.8	CB110	T90S2	3.2
26	110	372.0	0.9	CB85	T90S2	1.7
26	110	395.3	1.8	CB110	T80C2	3.2
26	110	373.3	0.9	CB85	T80C2	1.7
26	56	387.1	1.2	R110	T90L4	2.7
26	56	370.1	0.8	R85	T90L4	1.6
25	115	429.0	4.8	CB150	T90S2	5.9
25	115	417.7	3.1	CB130	T90S2	4.2
25	115	430.4	4.8	CB150	T80C2	5.9
25	115	419.0	3.1	CB130	T80C2	4.2
25	58	447.3	4.9	CB150	T90L4	6.4

1.7 - *Gearmotors*

n_2 min^{-1}	ir	T2 Nm	FS'		1.5 kW	Ptn kW
25	58	447.3	3.3	CB130	T90L4	4.9
24	59	449.1	2.0	CB110	T90L4	3.8
24	59	443.1	1.0	CB85	T90L4	2.2
24	40	475.5	4.9	CB150	T100A6	6.7
24	40	475.5	4.9	CB150	T90LB6	6.7
24	40	444.9	3.7	R150	T100A6	5.5
24	40	469.4	3.3	CB130	T100A6	4.7
24	40	469.4	3.3	CB130	T90LB6	4.7
24	40	432.8	2.4	R130	T100A6	3.7
24	40	414.5	1.8	R110	T90LB6	2.6
24	40	414.5	1.8	R110	T100A6	2.6
24	40	402.5	0.9	R85	T90LB6	1.5
24	40	402.5	0.9	R85	T100A6	1.5
23	124	462.5	6.6	CB180	T90S2	8.2
23	124	464.1	6.5	CB180	T80C2	8.2
23	62	484.5	6.6	CB180	T90L4	9.3
22	129	455.5	1.6	CB110	T90S2	3.2
22	129	429.9	0.8	CB85	T90S2	1.7
22	129	457.2	1.6	CB110	T80C2	3.2
22	129	431.3	0.8	CB85	T80C2	1.7
22	43	498.1	1.8	CB110	T100A6	3.8
22	43	498.1	1.8	CB110	T90LB6	3.8
22	43	491.3	0.9	CB85	T90LB6	2.2
21	69	525.5	1.7	CB110	T90L4	3.8
21	69	518.3	0.9	CB85	T90L4	2.2
20	70	448.9	1.1	R110	T90L4	2.3
20	70	427.9	0.6	R85	T90L4	1.3
20	144	530.0	4.1	CB150	T90S2	5.7
20	144	515.8	2.7	CB130	T90S2	4.0
20	144	531.9	4.1	CB150	T80C2	5.7
20	144	517.6	2.7	CB130	T80C2	4.0
20	72	555.4	4.2	CB150	T90L4	6.4
20	72	548.2	2.8	CB130	T90L4	4.7
19.2	150	552.1	5.8	CB180	T90S2	7.9
19.2	49	515.4	3.0	R150	T100A6	4.8
19.2	49	515.4	2.0	R130	T100A6	3.5
19.2	49	492.9	1.4	R110	T90LB6	2.5
19.2	49	492.9	1.4	R110	T100A6	2.5
19.2	49	462.9	0.7	R85	T90LB6	1.3
19.1	150	554.2	5.8	CB180	T80C2	7.9
19.1	75	578.4	5.8	CB180	T90L4	8.9
18.8	50	586.7	4.2	CB150	T100A6	6.4
18.8	50	586.7	4.2	CB150	T90LB6	6.4
18.8	50	586.7	2.8	CB130	T100A6	4.5
18.8	50	586.7	2.8	CB130	T90LB6	4.5
18.4	51	575.1	1.7	CB110	T90LB6	3.4
18.4	51	575.1	1.7	CB110	T100A6	3.4
18.4	51	567.3	0.9	CB85	T90LB6	2.0
18.1	52	618.0	5.9	CB180	T100A6	9.3
18.1	52	618.0	5.9	CB180	T90LB6	9.3
17.9	80	552.8	1.4	CB110	T90L4	2.9
17.9	80	496.6	1.0	R110	T90L4	2.2
17.9	80	521.0	0.7	CB85	T90L4	1.5
17.8	162	539.8	3.4	CB150	T90S2	4.5
17.8	162	523.7	2.2	CB130	T90S2	3.2
17.7	162	541.6	3.4	CB150	T80C2	4.5
17.7	162	525.4	2.2	CB130	T80C2	3.2
17.1	168	551.5	1.2	CB110	T90S2	2.6
17.1	168	518.4	0.6	CB85	T90S2	1.4
17.1	168	553.7	1.2	CB110	T80C2	2.6
17.1	168	520.0	0.6	CB85	T80C2	1.4
16.8	85	630.2	5.3	CB180	T90L4	7.9
16.8	85	621.7	3.7	CB150	T90L4	5.5
16.8	85	613.2	2.4	CB130	T90L4	4.0
16.8	56	580.2	2.6	R150	T100A6	4.7
16.8	56	580.3	1.6	R130	T100A6	3.4
16.8	56	546.2	1.0	R110	T90LB6	2.3
16.8	56	546.2	1.0	R110	T100A6	2.3
16.8	56	529.0	0.6	R85	T90LB6	1.3
16.6	174	588.6	4.7	CB180	T90S2	6.4
16.5	174	590.7	4.7	CB180	T80C2	6.4
16.2	58	671.6	3.7	CB150	T90LB6	6.2
16.2	58	671.6	3.7	CB150	T100A6	6.2
16.2	58	671.7	2.4	CB130	T100A6	4.3
16.2	58	671.7	2.4	CB130	T90LB6	4.3
15.9	59	665.3	1.5	CB110	T100A6	3.4
15.9	59	665.3	1.5	CB110	T90LB6	3.4
15.9	59	656.2	0.8	CB85	T90LB6	2.0
15.2	62	727.6	4.9	CB180	T100A6	8.9
15.2	62	727.6	4.9	CB180	T90LB6	8.9

1.7 - Getriebemotoren

n_2 min^{-1}	ir	T2 Nm	FS'		1.5 kW	Ptn kW
14.3	100	571.2	0.8	R110	T90L4	1.9
14.3	202	663.0	3.0	CB150	T90S2	4.4
14.3	202	642.9	1.9	CB130	T90S2	3.1
14.2	202	665.3	3.0	CB150	T80C2	4.4
14.2	202	645.2	1.9	CB130	T80C2	3.1
13.6	69	778.3	1.3	CB110	T100A6	3.4
13.6	69	778.3	1.3	CB110	T90LB6	3.4
13.6	69	767.7	0.7	CB85	T90LB6	2.0
13.5	213	720.5	5.9	CB215	T90S2	7.8
13.5	213	688.7	4.0	CB180	T90S2	5.8
13.5	213	723.1	5.9	CB215	T80C2	7.8
13.5	213	691.2	4.0	CB180	T80C2	5.8
13.4	70	671.9	2.0	R150	T100A6	4.0
13.4	70	661.3	1.4	R130	T100A6	2.9
13.4	70	640.2	0.9	R110	T100A6	2.1
13.4	70	640.2	0.9	R110	T90LB6	2.1
13.4	107	782.8	4.5	CB180	T90L4	7.6
13.1	72	822.6	3.2	CB150	T90LB6	5.9
13.1	72	822.6	3.2	CB150	T100A6	5.9
13.1	72	822.7	2.1	CB130	T100A6	4.2
13.1	72	822.7	2.1	CB130	T90LB6	4.2
13.0	110	727.3	1.2	CB110	T90L4	2.9
13.0	110	683.4	0.6	CB85	T90L4	1.5
12.8	225	716.3	1.0	CB110	T90S2	2.5
12.8	225	718.6	1.0	CB110	T80C2	2.5
12.5	75	868.9	4.3	CB180	T100A6	8.5
12.5	75	868.9	4.3	CB180	T90LB6	8.5
12.5	231	735.1	2.7	CB150	T90S2	4.1
12.5	231	712.2	1.8	CB130	T90S2	3.0
12.4	115	829.7	3.0	CB150	T90L4	5.3
12.4	115	818.2	1.9	CB130	T90L4	3.9
12.4	231	738.3	2.7	CB150	T80C2	4.1
12.4	231	715.1	1.8	CB130	T80C2	3.0
11.8	80	755.8	1.7	R150	T100A6	3.9
11.8	80	731.4	1.2	R130	T100A6	2.7
11.8	80	804.7	1.1	CB110	T90LB6	2.9
11.8	80	804.7	1.1	CB110	T100A6	2.9
11.8	80	707.0	0.8	R110	T90LB6	2.0
11.8	80	707.0	0.8	R110	T100A6	2.0
11.6	248	826.7	5.4	CB215	T90S2	7.6
11.6	248	789.6	3.7	CB180	T90S2	5.7
11.6	248	829.5	5.4	CB215	T80C2	7.6
11.6	248	792.3	3.7	CB180	T80C2	5.7
11.5	124	894.5	4.1	CB180	T90L4	7.3
11.1	129	852.5	1.1	CB110	T90L4	2.9
11.1	85	932.6	4.0	CB180	T90LB6	7.3
11.1	85	932.6	4.0	CB180	T100A6	7.3
11.1	85	932.6	2.7	CB150	T100A6	5.3
11.1	85	932.6	2.7	CB150	T90LB6	5.3
11.1	85	906.8	1.8	CB130	T90LB6	3.5
11.1	85	906.8	1.8	CB130	T100A6	3.5
11.0	261	818.2	3.5	CB180	T90S2	5.5
11.0	261	820.5	3.5	CB180	T80C2	5.5
10.8	267	863.0	5.0	CB215	T90S2	7.2
10.8	267	866.2	4.9	CB215	T80C2	7.2
10.2	140	912.0	4.1	85/180	T90L4	3.4
10.2	140	897.9	2.9	85/150	T90L4	3.4
10.2	140	856.0	1.9	63/130	T90L4	2.2
10.2	140	870.0	1.9	85/130	T90L4	3.4
10.2	140	870.0	1.9	70/130	T90L4	2.5
10.2	140	841.8	1.2	63/110	T90L4	2.2
10.2	140	855.7	1.2	85/110	T90L4	2.5
10.2	140	855.7	1.2	70/110	T90L4	2.5
10.1	286	753.7	0.7	CB110	T90S2	1.9
10.0	286	756.8	0.7	CB110	T80C2	1.9
10.0	288	888.2	2.4	CB150	T90S2	3.9
10.0	288	874.0	1.5	CB130	T90S2	2.9
10.0	288	890.9	2.4	CB150	T80C2	3.9
10.0	288	876.6	1.5	CB130	T80C2	2.9
9.9	144	1024	2.5	CB150	T90L4	5.1
9.9	144	1010	1.6	CB130	T90L4	3.7
9.8	146	1068	5.8	CB215	T90L4	9.3
9.6	300	985	4.8	CB215	T90S2	7.4
9.6	300	988	4.7	CB215	T80C2	7.4
9.5	150	1082	3.5	CB180	T90L4	7.3
9.5	304	938	3.2	CB180	T90S2	5.4
9.4	304	941	3.2	CB180	T80C2	5.4
9.4	100	884	1.3	R150	T100A6	3.5
9.4	100	838	0.9	R130	T100A6	2.4
9.4	100	808	0.6	R110	T100A6	1.8

1.7 - Motoriduttori

n_2 min^{-1}	ir	T2 Nm	FS'		1.5 kW	Ptn kW
9.4	100	808	0.6	R110	T90LB6	1.8
8.9	323	980	1.8	CB150	T90S2	3.8
8.9	323	948	1.2	CB130	T90S2	2.7
8.9	323	983	1.8	CB150	T80C2	3.8
8.9	323	951	1.2	CB130	T80C2	2.7
8.8	162	1022	2.2	CB150	T90L4	4.0
8.8	162	1006	1.4	CB130	T90L4	3.0
8.8	107	1157	3.4	CB180	T100A6	7.0
8.8	107	1157	3.4	CB180	T90LB6	7.0
8.6	110	1056	0.9	CB110	T100A6	2.4
8.6	110	1056	0.9	CB110	T90LB6	2.4
8.5	168	1043	0.8	CB110	T90L4	2.3
8.4	112	1264	5.7	CB215	T100A6	9.6
8.4	112	1264	5.7	CB215	T90LB6	9.6
8.2	174	1098	5.1	CB215	T90L4	6.8
8.2	174	1133	2.9	CB180	T90L4	5.8
8.2	115	1227	2.2	CB150	T100A6	4.9
8.2	115	1227	2.2	CB150	T90LB6	4.9
8.2	115	1210	1.4	CB130	T90LB6	3.4
8.2	115	1210	1.4	CB130	T100A6	3.4
8.0	360	1146	6.6	CB250	T90S2	11
8.0	360	1150	6.6	CB250	T80C2	11
7.8	368	1116	2.8	CB180	T90S2	5.2
7.8	368	1120	2.8	CB180	T80C2	5.2
7.8	121	1327	5.0	CB215	T100A6	8.9
7.8	121	1327	5.0	CB215	T90LB6	8.9
7.7	375	1175	4.0	CB215	T90S2	6.8
7.7	375	1180	4.0	CB215	T80C2	6.8
7.6	124	1342	3.0	CB180	T100A6	7.0
7.6	124	1342	3.0	CB180	T90LB6	7.0
7.3	129	1238	0.8	CB110	T90LB6	2.4
7.3	129	1238	0.8	CB110	T100A6	2.4
7.2	200	1242	3.3	85/180	T90L4	3.2
7.2	200	1222	2.3	85/150	T90L4	3.2
7.2	403	1202	1.6	CB150	T90S2	3.7
7.2	200	1182	1.5	70/130	T90L4	2.2
7.2	200	1182	1.5	63/130	T90L4	2.0
7.2	200	1202	1.5	85/130	T90L4	3.2
7.2	403	1162	1.0	CB130	T90S2	2.7
7.2	200	1182	0.8	63/110	T90L4	2.0
7.2	200	1182	0.8	70/110	T90L4	2.2
7.2	200	1202	0.8	85/110	T90L4	2.2
7.1	403	1207	1.6	CB150	T80C2	3.7
7.1	403	1167	1.0	CB130	T80C2	2.7
7.1	202	1255	1.9	CB150	T90L4	3.9
7.1	202	1234	1.2	CB130	T90L4	2.9
6.9	207	1348	6.1	CB250	T90L4	11
6.9	420	1274	2.4	CB180	T90S2	5.2
6.8	420	1279	2.4	CB180	T80C2	5.2
6.7	428	1299	3.3	CB215	T90S2	6.4
6.7	213	1366	3.7	CB215	T90L4	7.0
6.7	428	1302	3.3	CB215	T80C2	6.4
6.7	213	1302	2.6	CB180	T90L4	5.2
6.6	434	1230	2.2	CB180	T90S2	4.7
6.6	435	1363	5.1	CB250	T90S2	10
6.6	434	1235	2.2	CB180	T80C2	4.7
6.6	435	1368	5.1	CB250	T80C2	10
6.5	144	1536	1.9	CB150	T90LB6	4.9
6.5	144	1536	1.9	CB150	T100A6	4.9
6.5	144	1492	1.2	CB130	T100A6	3.3
6.5	144	1492	1.2	CB130	T90LB6	3.3
6.5	145	1592	6.3	CB250	T100A6	14
6.5	145	1592	6.3	CB250	T90LB6	14
6.4	146	1579	4.3	CB215	T90LB6	8.6
6.4	146	1579	4.3	CB215	T100A6	8.6
6.4	225	1330	0.7	CB110	T90L4	2.3
6.3	150	1599	2.6	CB180	T100A6	6.8
6.3	150	1599	2.6	CB180	T90LB6	6.8
6.2	231	1389	1.7	CB150	T90L4	3.7
6.2	231	1343	1.1	CB130	T90L4	2.7
6.0	240	1538	5.5	CB250	T90L4	11
5.8	162	1507	1.6	CB150	T90LB6	3.8
5.8	162	1507	1.6	CB150	T100A6	3.8
5.8	162	1457	1.1	CB130	T100A6	2.6
5.8	162	1457	1.1	CB130	T90LB6	2.6
5.8	248	1564	3.4	CB215	T90L4	6.8
5.8	248	1490	2.3	CB180	T90L4	5.1
5.7	504	1379	1.2	CB150	T90S2	3.3
5.7	504	1355	0.9	CB130	T90S2	2.4
5.7	504	1385	1.2	CB150	T80C2	3.3

1.7 - *Gearmotors*

n_2 min^{-1}	ir	T2 Nm	FS'		1.5 kW	Ptn kW
5.7	504	1360	0.9	CB130	T80C2	2.4
5.7	508	1440	3.6	CB250	T90S2	8.8
5.7	508	1445	3.6	CB250	T80C2	8.8
5.6	168	1433	0.7	CB110	T100A6	2.0
5.6	168	1433	0.7	CB110	T90LB6	2.0
5.6	518	1546	2.9	CB215	T90S2	6.3
5.5	518	1552	2.9	CB215	T80C2	6.3
5.5	525	1461	1.9	CB180	T90S2	4.6
5.5	261	1542	2.2	CB180	T90L4	5.0
5.5	525	1466	1.9	CB180	T80C2	4.6
5.4	174	1671	3.7	CB215	T90LB6	6.8
5.4	174	1671	3.7	CB215	T100A6	6.8
5.4	174	1671	2.2	CB180	T100A6	5.5
5.4	174	1671	2.2	CB180	T90LB6	5.5
5.4	267	1630	3.1	CB215	T90L4	6.4
5.3	177	1889	5.0	CB250	T100A6	13
5.3	177	1889	5.0	CB250	T90LB6	13
5.1	280	1542	2.4	85/180	T90L4	3.2
5.1	280	1486	1.7	85/150	T90L4	3.2
5.1	280	1429	1.1	70/130	T90L4	2.2
5.1	280	1429	1.1	63/130	T90L4	2.0
5.1	280	1429	1.1	85/130	T90L4	3.2
5.1	280	1430	0.7	70/110	T90L4	2.2
5.1	280	1430	0.7	63/110	T90L4	2.0
5.1	280	1430	0.7	85/110	T90L4	2.2
5.0	573	1566	3.6	CB250	T90S2	8.4
5.0	573	1573	3.6	CB250	T80C2	8.4
5.0	576	1519	1.1	CB150	T90S2	3.2
5.0	576	1489	0.7	CB130	T90S2	2.3
5.0	576	1525	1.1	CB150	T80C2	3.2
5.0	576	1496	0.7	CB130	T80C2	2.3
5.0	288	1701	1.5	CB150	T90L4	3.6
5.0	288	1643	1.0	CB130	T90L4	2.6
4.9	290	1802	4.7	CB250	T90L4	11
4.8	600	1582	2.6	CB215	T90S2	5.3
4.8	600	1612	1.6	CB180	T90S2	4.4
4.8	600	1588	2.6	CB215	T80C2	5.3
4.8	600	1618	1.6	CB180	T80C2	4.4
4.8	300	1862	3.0	CB215	T90L4	6.6
4.7	304	1768	2.0	CB180	T90L4	4.9
4.7	202	1848	1.4	CB150	T90LB6	3.7
4.7	202	1848	1.4	CB150	T100A6	3.7
4.7	202	1787	0.9	CB130	T90LB6	2.5
4.7	202	1787	0.9	CB130	T100A6	2.5
4.5	207	1988	4.6	CB250	T90LB6	10
4.5	207	1988	4.6	CB250	T100A6	10
4.4	323	1876	1.1	CB150	T90L4	3.5
4.4	323	1811	0.7	CB130	T90L4	2.5
4.4	213	2014	2.8	CB215	T100A6	6.6
4.4	213	2014	2.8	CB215	T90LB6	6.6
4.4	213	1917	1.9	CB180	T100A6	5.0
4.4	213	1917	1.9	CB180	T90LB6	5.0
4.1	231	2041	1.3	CB150	T100A6	3.5
4.1	231	2041	1.3	CB150	T90LB6	3.5
4.1	231	1971	0.8	CB130	T90LB6	2.4
4.1	231	1971	0.8	CB130	T100A6	2.4
4.1	710	1941	2.9	CB250	T90S2	8.4
4.0	710	1950	2.9	CB250	T80C2	8.4
4.0	720	1791	0.8	CB150	T90S2	3.0
4.0	720	1796	0.8	CB150	T80C2	3.0
4.0	360	2201	4.0	CB250	T90L4	9.7
3.9	240	2302	4.1	CB250	T100A6	10
3.9	240	2302	4.1	CB250	T90LB6	10
3.9	368	2099	1.7	CB180	T90L4	4.7
3.8	750	1977	2.0	CB215	T90S2	5.3
3.8	750	1865	1.3	CB180	T90S2	4.1
3.8	750	1982	2.0	CB215	T80C2	5.3
3.8	750	1870	1.2	CB180	T80C2	4.1
3.8	375	2218	2.5	CB215	T90L4	6.1
3.8	248	2306	2.5	CB215	T90LB6	6.4
3.8	248	2306	2.5	CB215	T100A6	6.4
3.8	248	2192	1.7	CB180	T90LB6	4.9
3.8	248	2192	1.7	CB180	T100A6	4.9
3.6	261	2268	1.7	CB180	T100A6	4.7
3.6	261	2268	1.7	CB180	T90LB6	4.7
3.6	400	2241	2.0	85/180	T90L4	2.4
3.6	400	2200	1.3	85/150	T90L4	2.4
3.6	400	2041	0.9	63/130	T90L4	1.5
3.6	400	2121	0.8	70/130	T90L4	1.7
3.6	400	2201	0.8	85/130	T90L4	2.4

1.7 - Getriebemotoren

n_2 min^{-1}	ir	T2 Nm	FS'		1.5 kW	Ptn kW
3.6	403	2260	1.0	CB150	T90L4	3.4
3.6	403	2180	0.6	CB130	T90L4	2.4
3.5	267	2361	2.4	CB215	T90LB6	6.0
3.5	267	2361	2.4	CB215	T100A6	6.0
3.4	420	2402	1.5	CB180	T90L4	4.7
3.3	428	2445	2.1	CB215	T90L4	5.8
3.3	435	2569	3.2	CB250	T90L4	9.2
3.3	434	2308	1.4	CB180	T90L4	4.3
3.3	288	2505	1.1	CB150	T100A6	3.4
3.3	288	2505	1.1	CB150	T90LB6	3.4
3.3	288	2418	0.7	CB130	T90LB6	2.3
3.3	288	2418	0.7	CB130	T100A6	2.3
3.2	290	2653	3.5	CB250	T90LB6	10
3.2	290	2653	3.5	CB250	T100A6	10
3.1	300	2746	2.2	CB215	T100A6	6.3
3.1	300	2746	2.2	CB215	T90LB6	6.3
3.1	304	2596	1.5	CB180	T100A6	4.6
3.1	304	2596	1.5	CB180	T90LB6	4.6
2.9	323	2708	0.9	CB150	T100A6	3.3
2.9	323	2708	0.9	CB150	T90LB6	3.3
2.8	504	2573	0.8	CB150	T90L4	3.0
2.8	508	2702	2.3	CB250	T90L4	8.1
2.8	518	2906	1.8	CB215	T90L4	5.7
2.7	525	2738	1.2	CB180	T90L4	4.3
2.6	360	3239	3.0	CB250	T100A6	9.2
2.6	360	3239	3.0	CB250	T90LB6	9.2
2.6	368	3090	1.3	CB180	T90LB6	4.5
2.6	368	3090	1.3	CB180	T100A6	4.5
2.5	375	3253	1.9	CB215	T90LB6	5.8
2.5	375	3253	1.9	CB215	T100A6	5.8
2.5	573	2923	2.3	CB250	T90L4	7.7
2.5	576	2888	0.7	CB150	T90L4	3.0
2.4	600	2950	1.6	CB215	T90L4	4.9
2.4	600	2768	1.5	85/180	T90L4	2.7
2.4	600	2709	1.1	85/150	T90L4	2.7
2.4	600	3071	1.0	CB180	T90L4	4.2
2.4	600	2589	0.7	63/130	T90L4	1.7
2.4	600	2589	0.7	70/130	T90L4	1.9
2.4	600	2647	0.7	85/130	T90L4	2.7
2.3	403	3321	0.7	CB150	T90LB6	3.2
2.3	403	3321	0.7	CB150	T100A6	3.2
2.2	420	3517	1.1	CB180	T100A6	4.5
2.2	420	3517	1.1	CB180	T90LB6	4.5
2.2	428	3516	1.6	CB215	T90LB6	5.4
2.2	428	3516	1.6	CB215	T100A6	5.4
2.2	434	3366	1.0	CB180	T100A6	4.2
2.2	434	3366	1.0	CB180	T90LB6	4.2
2.2	435	3781	2.4	CB250	T90LB6	8.8
2.2	435	3781	2.4	CB250	T100A6	8.8
2.0	710	3634	1.8	CB250	T90L4	7.7
1.9	750	3675	1.2	CB215	T90L4	4.9
1.9	750	3449	0.8	CB180	T90L4	3.8
1.9	508	3949	1.7	CB250	T90LB6	7.7
1.9	508	3949	1.7	CB250	T100A6	7.7
1.8	518	4194	1.4	CB215	T100A6	5.3
1.8	518	4194	1.4	CB215	T90LB6	5.3
1.8	525	4001	0.9	CB180	T90LB6	4.1
1.8	525	4001	0.9	CB180	T100A6	4.1
1.6	573	4281	1.7	CB250	T100A6	7.4
1.6	573	4281	1.7	CB250	T90LB6	7.4
1.6	600	4288	1.2	CB215	T90LB6	4.7
1.6	600	4288	1.2	CB215	T100A6	4.7
1.6	600	4380	0.8	CB180	T100A6	3.9
1.6	600	4380	0.8	CB180	T90LB6	3.9
1.5	956	4584	1.6	110/215	T90L4	2.7
1.5	980	4612	1.0	110/180	T90L4	2.7
1.5	980	4316	0.9	85/180	T90L4	1.6
1.5	980	4316	0.7	85/150	T90L4	1.6
1.5	980	4613	0.6	110/150	T90L4	2.7
1.3	710	5101	1.4	CB250	T100A6	7.2
1.3	710	5101	1.4	CB250	T90LB6	7.2
1.3	750	5388	0.9	CB215	T90LB6	4.7
1.3	750	5388	0.9	CB215	T100A6	4.7
1.0	1372	6475	1.1	110/215	T90L4	2.7
1.0	1372	5235	0.9	85/180	T90L4	1.6
1.0	1372	5511	0.8	110/180	T90L4	2.7
0.73	1960	7654	0.9	110/215	T90L4	2.7
0.73	1960	6673	0.7	85/180	T90L4	1.6
0.73	1960	7062	0.7	110/180	T90L4	2.7
0.51	2800	9827	0.7	110/215	T90L4	2.3

1.7 - Motoriduttori

n_2 min^{-1}	ir	T2 Nm	FS'		1.8 kW	Ptn kW
560	5	27.0	2.9	R63	T80D2	2.5
560	5	26.7	1.7	R50	T80D2	1.7
400	7	37.0	2.6	R70	T80D2	2.5
400	7	37.0	2.3	R63	T80D2	2.2
400	7	36.5	1.4	R50	T80D2	1.5
286	5	51.7	2.1	R63	T90LB4	2.5
280	10	51.6	2.0	R70	T80D2	2.2
280	10	51.6	1.8	R63	T80D2	2.0
280	10	51.6	1.1	R50	T80D2	1.4
204	7	71.5	3.5	R85	T90LB4	3.4
204	7	71.5	1.8	R70	T90LB4	2.5
204	7	70.7	1.6	R63	T90LB4	2.2
187	15	75.5	1.4	R70	T80D2	1.9
187	15	75.5	1.3	R63	T80D2	1.7
187	15	75.5	0.8	R50	T80D2	1.2
143	10	101.0	2.8	R85	T90LB4	3.2
143	10	99.8	1.4	R70	T90LB4	2.2
143	10	99.8	1.3	R63	T90LB4	2.0
140	20	98.2	1.2	R70	T80D2	1.7
140	20	98.2	1.1	R63	T80D2	1.5
134	7	111.8	5.2	R110	T100B6	5.6
134	7	110.5	2.7	R85	T100B6	3.2
134	7	110.5	1.4	R70	T100B6	2.4
100	28	127.2	0.9	R70	T80D2	1.3
100	28	128.9	0.8	R63	T80D2	1.2
95	15	146.0	1.9	R85	T90LB4	2.7
95	15	144.3	1.0	R70	T90LB4	1.9
95	15	144.2	0.9	R63	T90LB4	1.7
94	10	159.8	5.9	R130	T100B6	7.2
94	10	157.9	4.1	R110	T100B6	5.2
94	10	156.0	2.1	R85	T100B6	3.0
94	10	154.1	1.1	R70	T100B6	2.1
72	20	189.9	1.6	R85	T90LB4	2.4
72	20	185.1	0.8	R70	T90LB4	1.7
72	20	185.2	0.7	R63	T90LB4	1.5
70	40	196.5	5.7	CB130	T80D2	5.6
70	40	176.8	1.4	R85	T80D2	1.6
70	40	174.3	0.7	R70	T80D2	1.2
70	40	174.3	0.6	R63	T80D2	1.1
65	43	211.2	3.0	CB110	T80D2	4.2
65	43	208.6	1.6	CB85	T80D2	2.4
64	44	210.7	0.8	CB70	T80D2	1.8
63	15	234.0	6.4	R150	T100B6	8.8
63	15	234.0	4.2	R130	T100B6	6.4
63	15	225.5	2.8	R110	T100B6	4.2
63	15	222.7	1.5	R85	T100B6	2.4
63	15	219.9	0.8	R70	T100B6	1.7
57	49	210.6	1.1	R85	T80D2	1.6
57	49	204.5	0.6	R70	T80D2	1.1
56	50	242.5	4.9	CB130	T80D2	5.3
55	51	250.5	2.5	CB110	T80D2	4.2
55	51	247.4	1.3	CB85	T80D2	2.4
55	51	244.2	0.7	CB70	T80D2	1.8
51	28	242.3	1.1	R85	T90LB4	1.8
51	28	239.0	0.6	R70	T90LB4	1.3
50	56	240.6	0.9	R85	T80D2	1.6
48	58	281.3	6.4	CB150	T80D2	7.1
48	58	281.3	4.3	CB130	T80D2	5.3
47	59	289.8	2.3	CB110	T80D2	4.2
47	59	286.1	1.2	CB85	T80D2	2.4
47	59	282.6	0.6	CB70	T80D2	1.8
47	20	308.2	5.5	R150	T100B6	8.3
47	20	308.2	3.5	R130	T100B6	6.0
47	20	297.0	2.4	R110	T100B6	4.0
47	20	289.4	1.3	R85	T100B6	2.2
41	69	334.7	2.2	CB110	T80D2	4.2
41	69	330.4	1.1	CB85	T80D2	2.4
40	70	283.6	0.7	R85	T80D2	1.3
39	72	349.2	5.5	CB150	T80D2	7.1
39	72	344.8	3.7	CB130	T80D2	5.1
36	40	379.9	5.5	CB150	T90LB4	7.1
36	40	375.0	3.7	CB130	T90LB4	5.1
36	40	346.2	1.8	R110	T90LB4	3.0
36	40	331.7	0.9	R85	T90LB4	1.6
35	80	353.6	1.9	CB110	T80D2	3.2
35	80	339.0	0.9	CB85	T80D2	1.7
35	80	309.3	0.6	R85	T80D2	1.2
34	28	389.5	3.9	R150	T100B6	5.7
34	28	394.8	2.4	R130	T100B6	4.3
34	28	378.9	1.8	R110	T100B6	3.0
34	28	363.2	0.9	R85	T100B6	1.6
33	43	403.1	1.9	CB110	T90LB4	3.8
33	43	397.9	1.0	CB85	T90LB4	2.2

1.7 - *Gearmotors*

n_2 min^{-1}	ir	T2 Nm	FS'		1.8 kW	Ptn kW
33	85	396.6	4.8	CB150	T80D2	6.2
33	85	386.2	3.1	CB130	T80D2	4.3
29	49	406.5	1.4	R110	T90LB4	2.7
29	49	383.0	0.7	R85	T90LB4	1.6
29	50	468.8	4.7	CB150	T90LB4	6.7
29	50	468.8	3.1	CB130	T90LB4	5.1
28	51	478.1	1.6	CB110	T90LB4	3.8
28	51	472.0	0.9	CB85	T90LB4	2.2
28	52	493.8	6.6	CB180	T90LB4	9.7
26	107	492.7	5.9	CB180	T80D2	8.2
26	56	464.5	1.0	R110	T90LB4	2.7
26	56	444.1	0.6	R85	T90LB4	1.6
25	110	486.4	1.4	CB110	T80D2	3.2
25	110	459.2	0.7	CB85	T80D2	1.7
25	37	542.3	6.2	CB180	T100B6	9.3
25	58	536.7	4.1	CB150	T90LB4	6.4
25	58	536.8	2.7	CB130	T90LB4	4.9
24	115	529.5	3.9	CB150	T80D2	5.9
24	115	515.4	2.5	CB130	T80D2	4.2
24	59	539.0	1.6	CB110	T90LB4	3.8
24	59	531.8	0.9	CB85	T90LB4	2.2
24	40	586.4	4.0	CB150	T100B6	6.7
24	40	548.8	3.0	R150	T100B6	5.5
24	40	578.9	2.7	CB130	T100B6	4.7
24	40	533.8	2.0	R130	T100B6	3.7
24	40	511.2	1.4	R110	T100B6	2.6
24	40	496.4	0.7	R85	T100B6	1.5
23	62	581.5	5.5	CB180	T90LB4	9.3
23	124	571.0	5.3	CB180	T80D2	8.2
22	43	614.3	1.4	CB110	T100B6	3.8
22	129	562.1	1.3	CB110	T80D2	3.2
22	129	530.7	0.7	CB85	T80D2	1.7
21	69	630.6	1.4	CB110	T90LB4	3.8
21	69	622.0	0.7	CB85	T90LB4	2.2
20	70	538.7	0.9	R110	T90LB4	2.3
19.9	72	666.5	3.5	CB150	T90LB4	6.4
19.9	72	657.9	2.3	CB130	T90LB4	4.7
19.4	144	654.4	3.3	CB150	T80D2	5.7
19.4	144	636.6	2.2	CB130	T80D2	4.0
19.2	49	635.6	2.4	R150	T100B6	4.8
19.2	49	635.7	1.6	R130	T100B6	3.5
19.2	49	607.9	1.1	R110	T100B6	2.5
19.1	75	694.1	4.8	CB180	T90LB4	8.9
18.8	50	723.6	3.4	CB150	T100B6	6.4
18.8	50	723.6	2.2	CB130	T100B6	4.5
18.7	150	681.3	4.7	CB180	T80D2	7.9
18.4	51	709.3	1.4	CB110	T100B6	3.4
18.1	52	762.2	4.8	CB180	T100B6	9.3
17.9	80	663.3	1.2	CB110	T90LB4	2.9
17.9	80	596.0	0.8	R110	T90LB4	2.2
17.9	80	625.2	0.6	CB85	T90LB4	1.5
17.3	162	666.5	2.8	CB150	T80D2	4.5
17.3	162	646.5	1.8	CB130	T80D2	3.2
16.8	85	756.3	4.4	CB180	T90LB4	7.9
16.8	85	746.0	3.1	CB150	T90LB4	5.5
16.8	85	735.8	2.0	CB130	T90LB4	4.0
16.8	56	715.6	2.1	R150	T100B6	4.7
16.8	56	715.7	1.3	R130	T100B6	3.4
16.8	56	673.6	0.8	R110	T100B6	2.3
16.7	168	680.6	1.0	CB110	T80D2	2.6
16.2	58	828.3	3.0	CB150	T100B6	6.2
16.2	58	828.4	2.0	CB130	T100B6	4.3
16.1	174	726.4	3.8	CB180	T80D2	6.4
15.9	59	820.6	1.2	CB110	T100B6	3.4
15.2	62	897.4	4.0	CB180	T100B6	8.9
14.3	100	685.4	0.6	R110	T90LB4	1.9
13.9	202	818.6	2.4	CB150	T80D2	4.4
13.9	202	793.6	1.6	CB130	T80D2	3.1
13.6	69	959.9	1.0	CB110	T100B6	3.4
13.4	70	828.7	1.6	R150	T100B6	4.0
13.4	70	815.6	1.1	R130	T100B6	2.9
13.4	70	789.6	0.7	R110	T100B6	2.1
13.4	107	939.3	3.7	CB180	T90LB4	7.6
13.2	213	888.9	4.8	CB215	T80D2	7.8
13.2	213	849.8	3.3	CB180	T80D2	5.8
13.1	72	1015	2.6	CB150	T100B6	5.9
13.1	72	1015	1.7	CB130	T100B6	4.2
13.0	110	873	1.0	CB110	T90LB4	2.9
12.8	112	1010	6.3	CB215	T90LB4	10
12.5	75	1072	6.4	CB215	T100B6	10

1.7 - Getriebemotoren

n_2 min^{-1}	ir	T2 Nm	FS'		1.8 kW	Ptn kW
12.5	75	1072	3.5	CB180	T100B6	8.5
12.4	225	885	0.8	CB110	T80D2	2.5
12.4	115	996	2.5	CB150	T90LB4	5.3
12.4	115	982	1.6	CB130	T90LB4	3.9
12.1	231	908	2.2	CB150	T80D2	4.1
12.1	231	879	1.4	CB130	T80D2	3.0
11.8	121	1076	5.5	CB215	T90LB4	9.6
11.8	80	1128	5.8	CB215	T100B6	10
11.8	80	932	1.4	R150	T100B6	3.9
11.8	80	902	1.0	R130	T100B6	2.7
11.8	80	992	0.9	CB110	T100B6	2.9
11.8	80	872	0.6	R110	T100B6	2.0
11.5	124	1074	3.4	CB180	T90LB4	7.3
11.3	248	1020	4.4	CB215	T80D2	7.6
11.3	248	974	3.0	CB180	T80D2	5.7
11.1	129	1023	0.9	CB110	T90LB4	2.9
11.1	85	1150	3.2	CB180	T100B6	7.3
11.1	85	1150	2.2	CB150	T100B6	5.3
11.1	85	1118	1.4	CB130	T100B6	3.5
10.7	261	1009	2.8	CB180	T80D2	5.5
10.5	267	1065	4.0	CB215	T80D2	7.2
10.2	140	1094	3.4	85/180	T90LB4	3.4
10.2	140	1078	2.4	85/150	T90LB4	3.4
10.2	140	1027	1.6	63/130	T90LB4	2.2
10.2	140	1044	1.6	85/130	T90LB4	3.4
10.2	140	1044	1.6	70/130	T90LB4	2.5
10.2	140	1010	1.0	63/110	T90LB4	2.2
10.2	140	1027	1.0	70/110	T90LB4	2.5
10.2	140	1027	1.0	85/110	T90LB4	2.5
9.9	144	1229	2.1	CB150	T90LB4	5.1
9.9	144	1212	1.3	CB130	T90LB4	3.7
9.8	146	1282	4.8	CB215	T90LB4	9.3
9.7	288	1096	1.9	CB150	T80D2	3.9
9.7	288	1079	1.2	CB130	T80D2	2.9
9.7	290	1157	6.2	CB250	T80D2	11
9.5	150	1299	2.9	CB180	T90LB4	7.3
9.4	100	1090	1.1	R150	T100B6	3.5
9.4	100	1034	0.8	R130	T100B6	2.4
9.3	300	1216	3.9	CB215	T80D2	7.4
9.2	304	1157	2.6	CB180	T80D2	5.4
8.8	162	1227	1.8	CB150	T90LB4	4.0
8.8	162	1207	1.1	CB130	T90LB4	3.0
8.8	107	1427	2.7	CB180	T100B6	7.0
8.7	323	1210	1.5	CB150	T80D2	3.8
8.7	323	1170	0.9	CB130	T80D2	2.7
8.6	110	1302	0.8	CB110	T100B6	2.4
8.5	168	1252	0.6	CB110	T90LB4	2.3
8.4	112	1558	4.6	CB215	T100B6	9.6
8.2	174	1318	4.2	CB215	T90LB4	6.8
8.2	174	1359	2.4	CB180	T90LB4	5.8
8.2	115	1514	1.8	CB150	T100B6	4.9
8.2	115	1492	1.1	CB130	T100B6	3.4
8.1	177	1532	5.5	CB250	T90LB4	14
7.8	120	1647	5.8	CB250	T100B6	14
7.8	360	1414	5.3	CB250	T80D2	11
7.8	121	1637	4.0	CB215	T100B6	8.9
7.6	368	1378	2.3	CB180	T80D2	5.2
7.6	124	1655	2.4	CB180	T100B6	7.0
7.5	375	1450	3.2	CB215	T80D2	6.8
7.3	129	1526	0.7	CB110	T100B6	2.4
7.2	200	1491	2.7	85/180	T90LB4	3.2
7.2	200	1467	1.9	85/150	T90LB4	3.2
7.2	200	1419	1.3	70/130	T90LB4	2.2
7.2	200	1419	1.3	63/130	T90LB4	2.0
7.2	200	1443	1.2	85/130	T90LB4	3.2
7.2	200	1418	0.7	70/110	T90LB4	2.2
7.2	200	1418	0.7	63/110	T90LB4	2.0
7.2	200	1442	0.7	85/110	T90LB4	2.2
7.1	202	1506	1.5	CB150	T90LB4	3.9
7.1	202	1481	1.0	CB130	T90LB4	2.9
7.0	403	1484	1.3	CB150	T80D2	3.7
7.0	403	1435	0.8	CB130	T80D2	2.7
6.9	207	1617	5.1	CB250	T90LB4	11
6.7	213	1640	3.1	CB215	T90LB4	7.0
6.7	213	1563	2.1	CB180	T90LB4	5.2
6.7	420	1572	2.0	CB180	T80D2	5.2
6.5	428	1603	2.7	CB215	T80D2	6.4
6.5	144	1894	1.5	CB150	T100B6	4.9
6.5	144	1840	1.0	CB130	T100B6	3.3
6.5	145	1963	5.1	CB250	T100B6	14

1.7 - Motoriduttori

n_2 min^{-1}	ir	T2 Nm	FS'		1.8 kW	Ptn kW
6.5	434	1519	1.8	CB180	T80D2	4.7
6.4	435	1682	4.1	CB250	T80D2	10
6.4	146	1948	3.5	CB215	T100B6	8.6
6.3	150	1972	2.1	CB180	T100B6	6.8
6.2	231	1666	1.4	CB150	T90LB4	3.7
6.2	231	1611	0.9	CB130	T90LB4	2.7
6.0	240	1846	4.6	CB250	T90LB4	11
5.8	162	1858	1.3	CB150	T100B6	3.8
5.8	162	1797	0.9	CB130	T100B6	2.6
5.8	248	1877	2.8	CB215	T90LB4	6.8
5.8	248	1788	1.9	CB180	T90LB4	5.1
5.6	504	1700	1.0	CB150	T80D2	3.3
5.6	504	1669	0.7	CB130	T80D2	2.4
5.5	508	1778	2.9	CB250	T80D2	8.8
5.5	261	1851	1.8	CB180	T90LB4	5.0
5.4	518	1907	2.4	CB215	T80D2	6.3
5.4	174	2061	3.0	CB215	T100B6	6.8
5.4	174	2061	1.8	CB180	T100B6	5.5
5.4	267	1956	2.6	CB215	T90LB4	6.4
5.3	525	1806	1.5	CB180	T80D2	4.6
5.3	177	2329	4.0	CB250	T100B6	13
5.1	280	1850	2.0	85/180	T90LB4	3.2
5.1	280	1783	1.4	85/150	T90LB4	3.2
5.1	280	1715	0.9	70/130	T90LB4	2.2
5.1	280	1715	0.9	63/130	T90LB4	2.0
5.1	280	1715	0.9	85/130	T90LB4	3.2
5.0	288	2041	1.2	CB150	T90LB4	3.6
5.0	288	1971	0.8	CB130	T90LB4	2.6
4.9	290	2162	3.9	CB250	T90LB4	11
4.9	573	1933	2.9	CB250	T80D2	8.4
4.9	576	1874	0.9	CB150	T80D2	3.2
4.9	576	1840	0.6	CB130	T80D2	2.3
4.8	300	2234	2.5	CB215	T90LB4	6.6
4.7	304	2122	1.7	CB180	T90LB4	4.9
4.7	600	1951	2.1	CB215	T80D2	5.3
4.7	600	1988	1.3	CB180	T80D2	4.4
4.7	202	2279	1.1	CB150	T100B6	3.7
4.7	202	2204	0.7	CB130	T100B6	2.5
4.5	207	2452	3.7	CB250	T100B6	10
4.4	323	2251	0.9	CB150	T90LB4	3.5
4.4	213	2484	2.3	CB215	T100B6	6.6
4.4	213	2364	1.6	CB180	T100B6	5.0
4.1	231	2518	1.0	CB150	T100B6	3.5
4.1	231	2431	0.7	CB130	T100B6	2.4
4.0	360	2641	3.4	CB250	T90LB4	9.7
3.9	710	2400	2.4	CB250	T80D2	8.4
3.9	240	2840	3.3	CB250	T100B6	10
3.9	368	2519	1.5	CB180	T90LB4	4.7
3.9	720	2210	0.7	CB150	T80D2	3.0
3.8	375	2662	2.1	CB215	T90LB4	6.1
3.8	248	2844	2.0	CB215	T100B6	6.4
3.8	248	2704	1.4	CB180	T100B6	4.9
3.7	750	2442	1.6	CB215	T80D2	5.3
3.7	750	2305	1.0	CB180	T80D2	4.1
3.6	261	2797	1.3	CB180	T100B6	4.7
3.6	400	2689	1.6	85/180	T90LB4	2.4
3.6	400	2640	1.1	85/150	T90LB4	2.4
3.6	400	2449	0.7	63/130	T90LB4	1.5
3.6	400	2545	0.7	70/130	T90LB4	1.7
3.6	400	2641	0.7	85/130	T90LB4	2.4
3.6	403	2712	0.8	CB150	T90LB4	3.4
3.5	267	2912	1.9	CB215	T100B6	6.0
3.4	420	2882	1.3	CB180	T90LB4	4.7
3.3	428	2934	1.7	CB215	T90LB4	5.8
3.3	435	3083	2.6	CB250	T90LB4	9.2
3.3	434	2769	1.1	CB180	T90LB4	4.3
3.3	288	3089	0.9	CB150	T100B6	3.4
3.2	290	3272	2.9	CB250	T100B6	10
3.1	300	3387	1.8	CB215	T100B6	6.3
3.1	304	3202	1.2	CB180	T100B6	4.6
2.9	323	3340	0.7	CB150	T100B6	3.3
2.8	504	3087	0.6	CB150	T90LB4	3.0
2.8	508	3242	1.9	CB250	T90LB4	8.1
2.8	518	3487	1.5	CB215	T90LB4	5.7
2.7	525	3286	1.0	CB180	T90LB4	4.3
2.6	360	3994	2.4	CB250	T100B6	9.2
2.6	368	3811	1.1	CB180	T100B6	4.5
2.5	375	4012	1.5	CB215	T100B6	5.8
2.5	573	3507	1.9	CB250	T90LB4	7.7
2.4	600	3540	1.4	CB215	T90LB4	4.9

1.7 - *Gearmotors*

n_2 min^{-1}	ir	T2 Nm	FS'		1.8 kW	Ptn kW
2.4	600	3322	1.3	85/180	T90LB4	2.7
2.4	600	3250	0.9	85/150	T90LB4	2.7
2.4	600	3685	0.8	CB180	T90LB4	4.2
2.2	420	4338	0.9	CB180	T100B6	4.5
2.2	428	4337	1.3	CB215	T100B6	5.4
2.2	434	4152	0.8	CB180	T100B6	4.2
2.2	435	4663	1.9	CB250	T100B6	8.8
2.0	710	4361	1.5	CB250	T90LB4	7.7
1.9	750	4410	1.0	CB215	T90LB4	4.9
1.9	750	4139	0.7	CB180	T90LB4	3.8
1.9	508	4870	1.4	CB250	T100B6	7.7
1.8	518	5173	1.1	CB215	T100B6	5.3
1.8	525	4934	0.7	CB180	T100B6	4.1
1.6	573	5280	1.4	CB250	T100B6	7.4
1.6	600	5289	1.0	CB215	T100B6	4.7
1.6	600	5401	0.6	CB180	T100B6	3.9
1.5	956	5501	1.3	110/215	T90LB4	2.7
1.5	980	5535	0.8	110/180	T90LB4	2.7
1.5	980	5179	0.7	85/180	T90LB4	1.6
1.3	710	6291	1.2	CB250	T100B6	7.2
1.3	750	6645	0.7	CB215	T100B6	4.7
1.0	1372	7770	0.9	110/215	T90LB4	2.7
1.0	1372	6282	0.7	85/180	T90LB4	1.6
1.0	1372	6613	0.7	110/180	T90LB4	2.7
0.73	1960	9185	0.8	110/215	T90LB4	2.7
0.51	2800	11793	0.6	110/215	T90LB4	2.3

1.7 - Getriebemotoren

n_2 min^{-1}	ir	T2 Nm	FS'		2.2 kW	Ptn kW
570	5	32.4	2.4	R63	T90L2	2.5
407	7	44.4	4.0	R85	T90L2	3.4
407	7	44.4	2.1	R70	T90L2	2.5
407	7	44.4	1.9	R63	T90L2	2.2
285	10	62.7	3.3	R85	T90L2	3.2
285	10	61.9	1.7	R70	T90L2	2.2
285	10	61.9	1.5	R63	T90L2	2.0
204	7	88.4	5.4	R110	T100A4	6.0
204	7	87.4	2.8	R85	T100A4	3.4
204	7	87.4	1.5	R70	T100A4	2.5
190	15	90.7	2.3	R85	T90L2	2.7
190	15	90.7	1.2	R70	T90L2	1.9
190	15	90.7	1.1	R63	T90L2	1.7
143	10	127.8	6.2	R130	T100A4	8.4
143	10	124.9	4.3	R110	T100A4	5.6
143	10	123.4	2.3	R85	T100A4	3.2
143	10	121.9	1.2	R70	T100A4	2.2
143	20	119.4	2.0	R85	T90L2	2.4
143	20	117.9	1.0	R70	T90L2	1.7
143	20	117.9	0.9	R63	T90L2	1.5
137	7	133.3	6.4	R130	T112A6	8.4
137	7	130.2	4.4	R110	T112A6	5.6
137	7	128.7	2.3	R85	T112A6	3.2
137	7	128.7	1.2	R70	T112A6	2.4
134	7	136.1	6.3	R130	T100BL6	8.4
134	7	133.0	4.3	R110	T100BL6	5.6
134	7	131.4	2.3	R85	T100BL6	3.2
134	7	131.4	1.2	R70	T100BL6	2.4
102	28	154.8	1.4	R85	T90L2	1.8
102	28	152.7	0.7	R70	T90L2	1.3
102	28	154.8	0.7	R63	T90L2	1.2
96	10	186.0	5.1	R130	T112A6	7.2
96	10	183.8	3.5	R110	T112A6	5.2
96	10	181.6	1.8	R85	T112A6	3.0
96	10	179.4	0.9	R70	T112A6	2.1
95	15	185.1	4.5	R130	T100A4	6.8
95	15	180.7	3.0	R110	T100A4	4.6
95	15	178.5	1.6	R85	T100A4	2.7
95	15	176.3	0.8	R70	T100A4	1.9
94	10	190.0	5.0	R130	T100BL6	7.2
94	10	187.8	3.4	R110	T100BL6	5.2
94	10	185.5	1.8	R85	T100BL6	3.0
94	10	183.2	0.9	R70	T100BL6	2.1
72	20	246.8	5.8	R150	T100A4	9.3
72	20	243.9	3.8	R130	T100A4	6.4
72	20	238.0	2.6	R110	T100A4	4.4
72	20	232.1	1.3	R85	T100A4	2.4
71	40	235.9	4.7	CB130	T90L2	5.6
71	40	218.2	2.3	R110	T90L2	3.0
71	40	212.3	1.1	R85	T90L2	1.6
71	40	209.4	0.6	R70	T90L2	1.2
66	43	253.6	2.5	CB110	T90L2	4.2
66	43	250.5	1.3	CB85	T90L2	2.4
65	44	253.0	0.7	CB70	T90L2	1.8
64	15	272.5	5.5	R150	T112A6	8.8
64	15	272.5	3.6	R130	T112A6	6.4
64	15	262.6	2.4	R110	T112A6	4.2
64	15	259.3	1.3	R85	T112A6	2.4
64	15	256.0	0.7	R70	T112A6	1.7
63	15	278.2	5.4	R150	T100BL6	8.8
63	15	278.3	3.6	R130	T100BL6	6.4
63	15	268.2	2.4	R110	T100BL6	4.2
63	15	264.9	1.3	R85	T100BL6	2.4
63	15	261.5	0.7	R70	T100BL6	1.7
58	49	260.1	1.7	R110	T90L2	2.7
58	49	252.8	0.9	R85	T90L2	1.6
57	50	294.9	6.2	CB150	T90L2	7.4
57	50	291.2	4.1	CB130	T90L2	5.3
56	51	300.8	2.1	CB110	T90L2	4.2
56	51	297.1	1.1	CB85	T90L2	2.4
51	28	312.6	4.1	R150	T100A4	6.2
51	28	312.7	2.6	R130	T100A4	4.5
51	28	308.6	1.8	R110	T100A4	3.3
51	28	296.1	0.9	R85	T100A4	1.8
51	56	293.1	1.2	R110	T90L2	2.7
51	56	288.9	0.8	R85	T90L2	1.6
49	58	337.8	5.4	CB150	T90L2	7.1
49	58	337.8	3.5	CB130	T90L2	5.3
48	59	347.9	1.9	CB110	T90L2	4.2
48	59	343.5	1.0	CB85	T90L2	2.4
48	20	358.9	4.7	R150	T112A6	8.3

1.7 - Motoriduttori

n_2 min^{-1}	ir	T2 Nm	FS'		2.2 kW	Ptn kW
48	20	358.9	3.0	R130	T112A6	6.0
48	20	345.8	2.1	R110	T112A6	4.0
48	20	337.0	1.1	R85	T112A6	2.2
47	20	366.6	4.6	R150	T100BL6	8.3
47	20	366.6	2.9	R130	T100BL6	6.0
47	20	353.1	2.0	R110	T100BL6	4.0
47	20	344.2	1.1	R85	T100BL6	2.2
41	69	401.9	1.8	CB110	T90L2	4.2
41	69	396.9	1.0	CB85	T90L2	2.4
41	70	351.0	1.1	R110	T90L2	2.3
41	70	340.7	0.6	R85	T90L2	1.3
40	72	419.3	4.6	CB150	T90L2	7.1
40	72	414.0	3.1	CB130	T90L2	5.1
38	75	436.8	6.3	CB180	T90L2	9.7
36	40	464.3	4.5	CB150	T100A4	7.1
36	40	440.8	3.2	R150	T100A4	6.0
36	40	458.4	3.0	CB130	T100A4	5.1
36	40	429.0	2.1	R130	T100A4	4.0
36	40	423.2	1.5	R110	T100A4	3.0
36	40	405.4	0.8	R85	T100A4	1.6
36	80	424.7	1.6	CB110	T90L2	3.2
36	80	389.3	1.0	R110	T90L2	2.2
36	80	407.1	0.8	CB85	T90L2	1.7
34	28	453.4	3.3	R150	T112A6	5.7
34	28	459.5	2.0	R130	T112A6	4.3
34	28	441.2	1.5	R110	T112A6	3.0
34	28	422.8	0.8	R85	T112A6	1.6
34	28	463.2	3.2	R150	T100BL6	5.7
34	28	469.4	2.0	R130	T100BL6	4.3
34	28	450.6	1.5	R110	T100BL6	3.0
34	28	431.9	0.7	R85	T100BL6	1.6
34	85	476.2	5.7	CB180	T90L2	8.5
34	85	476.2	4.0	CB150	T90L2	6.2
34	85	463.6	2.6	CB130	T90L2	4.3
33	43	492.7	1.6	CB110	T100A4	3.8
29	49	511.2	2.6	R150	T100A4	5.5
29	49	504.0	1.7	R130	T100A4	3.6
29	49	496.8	1.2	R110	T100A4	2.7
29	50	573.0	3.9	CB150	T100A4	6.7
29	50	573.0	2.5	CB130	T100A4	5.1
29	100	457.0	0.8	R110	T90L2	1.9
28	51	584.4	1.3	CB110	T100A4	3.8
28	52	603.5	5.4	CB180	T100A4	9.7
27	107	591.5	4.9	CB180	T90L2	8.2
26	37	631.5	5.3	CB180	T112A6	9.3
26	110	583.7	1.2	CB110	T90L2	3.2
26	110	551.2	0.6	CB85	T90L2	1.7
26	56	600.5	2.2	R150	T100A4	5.5
26	56	567.6	1.4	R130	T100A4	3.5
26	56	567.7	0.8	R110	T100A4	2.7
25	37	645.0	5.2	CB180	T100BL6	9.3
25	115	635.9	3.2	CB150	T90L2	5.9
25	115	618.9	2.1	CB130	T90L2	4.2
25	58	656.0	3.4	CB150	T100A4	6.4
25	58	656.1	2.2	CB130	T100A4	4.9
24	59	658.7	1.3	CB110	T100A4	3.8
24	40	682.8	3.4	CB150	T112A6	6.7
24	40	639.1	2.6	R150	T112A6	5.5
24	40	674.1	2.3	CB130	T112A6	4.7
24	40	621.5	1.7	R130	T112A6	3.7
24	40	595.2	1.2	R110	T112A6	2.6
24	40	577.8	0.6	R85	T112A6	1.5
24	40	697.4	3.4	CB150	T100BL6	6.7
24	40	652.6	2.5	R150	T100BL6	5.5
24	40	688.5	2.2	CB130	T100BL6	4.7
24	40	634.7	1.6	R130	T100BL6	3.7
24	40	607.9	1.2	R110	T100BL6	2.6
24	40	590.3	0.6	R85	T100BL6	1.5
23	62	710.7	4.5	CB180	T100A4	9.3
23	124	685.7	4.4	CB180	T90L2	8.2
22	43	715.2	1.2	CB110	T112A6	3.8
22	129	675.2	1.1	CB110	T90L2	3.2
22	43	730.6	1.2	CB110	T100BL6	3.8
21	69	770.7	1.1	CB110	T100A4	3.8
20	70	689.1	1.7	R150	T100A4	4.5
20	70	688.9	1.2	R130	T100A4	3.3
20	70	658.4	0.7	R110	T100A4	2.3
20	72	814.6	2.9	CB150	T100A4	6.4
20	72	804.1	1.9	CB130	T100A4	4.7
20	144	785.6	2.8	CB150	T90L2	5.7

1.7 - *Gearmotors*

n_2 min^{-1}	ir	T2 Nm	FS'		2.2 kW	Ptn kW
20	144	764.4	1.8	CB130	T90L2	4.0
20	49	739.9	2.1	R150	T112A6	4.8
20	49	739.9	1.4	R130	T112A6	3.5
20	49	707.9	0.9	R110	T112A6	2.5
20	146	818.0	6.4	CB215	T90L2	10
19	50	842.6	2.9	CB150	T112A6	6.4
19	50	842.6	1.9	CB130	T112A6	4.5
19	49	755.9	2.0	R150	T100BL6	4.8
19	49	755.9	1.3	R130	T100BL6	3.5
19	49	722.9	0.9	R110	T100BL6	2.5
19	75	848.4	3.9	CB180	T100A4	8.9
19	150	818.3	3.9	CB180	T90L2	7.9
19	51	826.3	1.2	CB110	T112A6	3.4
19	50	860.5	2.9	CB150	T100BL6	6.4
19	50	860.5	1.9	CB130	T100BL6	4.5
18	52	887.7	4.1	CB180	T112A6	9.3
18	51	843.5	1.2	CB110	T100BL6	3.4
18	52	906.4	4.0	CB180	T100BL6	9.3
18	80	893.1	6.5	CB215	T100A4	10
18	80	775.4	1.5	R150	T100A4	4.4
18	80	752.0	1.0	R130	T100A4	3.0
18	80	810.7	1.0	CB110	T100A4	2.9
18	80	728.4	0.7	R110	T100A4	2.2
18	162	800.3	2.3	CB150	T90L2	4.5
18	162	776.5	1.5	CB130	T90L2	3.2
17	56	833.5	1.8	R150	T112A6	4.7
17	56	833.5	1.1	R130	T112A6	3.4
17	56	784.5	0.7	R110	T112A6	2.3
17	168	817.5	0.8	CB110	T90L2	2.6
17	85	924.3	3.6	CB180	T100A4	7.9
17	85	911.8	2.5	CB150	T100A4	5.5
17	85	899.3	1.6	CB130	T100A4	4.0
17	56	851.0	1.8	R150	T100BL6	4.7
17	56	851.1	1.1	R130	T100BL6	3.4
17	56	801.1	0.7	R110	T100BL6	2.3
17	58	964.9	2.6	CB150	T112A6	6.2
17	58	964.9	1.7	CB130	T112A6	4.3
16	174	808.1	5.8	CB215	T90L2	6.8
16	174	872.3	3.2	CB180	T90L2	6.4
16	59	955.7	1.0	CB110	T112A6	3.4
16	58	985.0	2.5	CB150	T100BL6	6.2
16	58	985.1	1.6	CB130	T100BL6	4.3
15.9	59	975.8	1.0	CB110	T100BL6	3.4
15.5	62	1045	6.3	CB215	T112A6	11
15.5	62	1045	3.4	CB180	T112A6	8.9
15.2	62	1067	6.1	CB215	T100BL6	11
15.2	62	1067	3.3	CB180	T100BL6	8.9
14.3	100	911	1.1	R150	T100A4	3.9
14.3	100	867	0.8	R130	T100A4	2.7
14.1	202	983	2.0	CB150	T90L2	4.4
14.1	202	953	1.3	CB130	T90L2	3.1
13.9	69	1118	0.9	CB110	T112A6	3.4
13.7	70	965	1.4	R150	T112A6	4.0
13.7	70	950	1.0	R130	T112A6	2.9
13.6	69	1142	0.9	CB110	T100BL6	3.4
13.4	70	986	1.4	R150	T100BL6	4.0
13.4	70	970	1.0	R130	T100BL6	2.9
13.4	213	1068	4.0	CB215	T90L2	7.8
13.4	213	1021	2.7	CB180	T90L2	5.8
13.4	107	1148	3.1	CB180	T100A4	7.6
13.3	72	1182	2.2	CB150	T112A6	5.9
13.3	72	1182	1.4	CB130	T112A6	4.2
13.1	72	1207	2.2	CB150	T100BL6	5.9
13.1	72	1207	1.4	CB130	T100BL6	4.2
13.0	110	1067	0.8	CB110	T100A4	2.9
12.8	75	1248	5.5	CB215	T112A6	10
12.8	75	1248	3.0	CB180	T112A6	8.5
12.8	112	1234	5.1	CB215	T100A4	10
12.7	225	1062	0.7	CB110	T90L2	2.5
12.5	75	1274	5.4	CB215	T100BL6	10
12.5	75	1274	2.9	CB180	T100BL6	8.5
12.4	115	1217	2.0	CB150	T100A4	5.3
12.4	115	1200	1.3	CB130	T100A4	3.9
12.3	231	1090	1.8	CB150	T90L2	4.1
12.3	231	1056	1.2	CB130	T90L2	3.0
12.0	80	1313	4.9	CB215	T112A6	10
12.0	80	1085	1.2	R150	T112A6	3.9
12.0	80	1051	0.8	R130	T112A6	2.7
12.0	80	1155	0.8	CB110	T112A6	2.9
11.9	240	1185	6.1	CB250	T90L2	11

1.7 - Getriebemotoren

n_2 min^{-1}	ir	T2 Nm	FS'		2.2 kW	Ptn kW
11.8	121	1315	4.5	CB215	T100A4	9.6
11.8	80	1341	4.8	CB215	T100BL6	10
11.8	80	1109	1.2	R150	T100BL6	3.9
11.8	80	1073	0.8	R130	T100BL6	2.7
11.8	80	1180	0.8	CB110	T100BL6	2.9
11.5	124	1312	2.8	CB180	T100A4	7.3
11.5	248	1225	3.6	CB215	T90L2	7.6
11.5	248	1170	2.5	CB180	T90L2	5.7
11.3	85	1340	2.8	CB180	T112A6	7.3
11.3	85	1340	1.9	CB150	T112A6	5.3
11.3	85	1302	1.2	CB130	T112A6	3.5
11.1	129	1250	0.7	CB110	T100A4	2.9
11.1	85	1368	2.7	CB180	T100BL6	7.3
11.1	85	1368	1.9	CB150	T100BL6	5.3
11.1	85	1330	1.2	CB130	T100BL6	3.5
10.9	261	1212	2.4	CB180	T90L2	5.5
10.7	267	1280	3.3	CB215	T90L2	7.2
10.5	136	1339	4.6	110/215	T100A4	6.0
10.4	90	1550	6.6	CB250	T100BL6	16
10.2	140	1338	2.8	85/180	T100A4	3.4
10.2	140	1338	2.8	110/180	T100A4	6.0
10.2	140	1379	2.7	130/180	T100A4	9.1
10.2	140	1317	2.0	85/150	T100A4	3.4
10.2	140	1338	2.0	110/150	T100A4	6.0
10.2	140	1276	1.3	70/130	T100A4	2.5
10.2	140	1276	1.3	85/130	T100A4	3.4
10.2	140	1255	0.8	70/110	T100A4	2.5
10.2	140	1255	0.8	85/110	T100A4	2.5
9.9	144	1502	1.7	CB150	T100A4	5.1
9.9	144	1481	1.1	CB130	T100A4	3.7
9.9	288	1316	1.6	CB150	T90L2	3.9
9.9	288	1295	1.0	CB130	T90L2	2.9
9.9	145	1577	5.8	CB250	T100A4	15
9.8	290	1389	5.2	CB250	T90L2	11
9.8	146	1567	4.0	CB215	T100A4	9.3
9.6	100	1269	0.9	R150	T112A6	3.5
9.6	100	1204	0.7	R130	T112A6	2.4
9.5	150	1587	2.4	CB180	T100A4	7.3
9.5	300	1460	3.2	CB215	T90L2	7.4
9.4	100	1296	0.9	R150	T100BL6	3.5
9.4	100	1229	0.6	R130	T100BL6	2.4
9.4	304	1389	2.1	CB180	T90L2	5.4
9.0	107	1663	2.3	CB180	T112A6	7.0
8.8	162	1499	1.5	CB150	T100A4	4.0
8.8	162	1476	0.9	CB130	T100A4	3.0
8.8	323	1453	1.2	CB150	T90L2	3.8
8.8	323	1405	0.8	CB130	T90L2	2.7
8.8	109	1836	5.7	CB250	T112A6	16
8.8	107	1697	2.3	CB180	T100BL6	7.0
8.7	110	1516	0.7	CB110	T112A6	2.4
8.6	109	1877	5.6	CB250	T100BL6	16
8.6	112	1814	4.0	CB215	T112A6	9.6
8.6	110	1548	0.6	CB110	T100BL6	2.4
8.4	112	1853	3.9	CB215	T100BL6	9.6
8.4	115	1761	1.5	CB150	T112A6	4.9
8.4	115	1736	1.0	CB130	T112A6	3.4
8.2	174	1610	3.5	CB215	T100A4	6.8
8.2	174	1661	2.0	CB180	T100A4	5.8
8.2	115	1800	1.5	CB150	T100BL6	4.9
8.2	115	1774	1.0	CB130	T100BL6	3.4
8.1	177	1872	4.5	CB250	T100A4	14
8.0	120	1917	5.0	CB250	T112A6	14
7.9	121	1908	3.4	CB215	T112A6	8.9
7.9	360	1698	4.4	CB250	T90L2	11
7.8	120	1959	4.9	CB250	T100BL6	14
7.8	121	1947	3.4	CB215	T100BL6	8.9
7.7	124	1927	2.1	CB180	T112A6	7.0
7.7	368	1656	1.9	CB180	T90L2	5.2
7.6	375	1742	2.7	CB215	T90L2	6.8
7.6	124	1968	2.0	CB180	T100BL6	7.0
7.3	195	1863	3.6	110/215	T100A4	5.6
7.2	200	1763	5.5	130/250	T100A4	8.4
7.2	200	1822	2.2	85/180	T100A4	3.2
7.2	200	1851	2.2	110/180	T100A4	5.6
7.2	200	1881	2.2	130/180	T100A4	8.4
7.2	200	1793	1.6	85/150	T100A4	3.2
7.2	200	1822	1.6	110/150	T100A4	5.6
7.2	200	1734	1.0	70/130	T100A4	2.2
7.2	200	1763	1.0	85/130	T100A4	3.2
7.1	202	1840	1.3	CB150	T100A4	3.9

1.7 - Motoriduttori

n_2 min^{-1}	ir	T2 Nm	FS'		2.2 kW	Ptn kW
7.1	202	1810	0.8	CB130	T100A4	2.9
7.1	403	1783	1.1	CB150	T90L2	3.7
7.1	403	1724	0.7	CB130	T90L2	2.7
6.9	207	1976	4.2	CB250	T100A4	11
6.8	420	1888	1.6	CB180	T90L2	5.2
6.7	213	2004	2.5	CB215	T100A4	7.0
6.7	213	1910	1.7	CB180	T100A4	5.2
6.7	144	2205	1.3	CB150	T112A6	4.9
6.7	144	2143	0.8	CB130	T112A6	3.3
6.7	428	1924	2.3	CB215	T90L2	6.4
6.6	145	2285	4.4	CB250	T112A6	14
6.6	146	2267	3.0	CB215	T112A6	8.6
6.6	434	1823	1.5	CB180	T90L2	4.7
6.6	435	2021	3.4	CB250	T90L2	10
6.5	144	2252	1.3	CB150	T100BL6	4.9
6.5	144	2188	0.8	CB130	T100BL6	3.3
6.5	145	2335	4.3	CB250	T100BL6	14
6.4	146	2316	3.0	CB215	T100BL6	8.6
6.4	150	2298	1.8	CB180	T112A6	6.8
6.3	150	2345	1.8	CB180	T100BL6	6.8
6.2	231	2036	1.2	CB150	T100A4	3.7
6.2	231	1969	0.8	CB130	T100A4	2.7
6.0	240	2256	3.8	CB250	T100A4	11
5.9	162	2161	1.1	CB150	T112A6	3.8
5.9	162	2091	0.7	CB130	T112A6	2.6
5.8	162	2210	1.1	CB150	T100BL6	3.8
5.8	162	2137	0.7	CB130	T100BL6	2.6
5.8	248	2294	2.3	CB215	T100A4	6.8
5.8	248	2185	1.6	CB180	T100A4	5.1
5.7	504	2045	0.8	CB150	T90L2	3.3
5.6	508	2135	2.4	CB250	T90L2	8.8
5.5	174	2398	2.6	CB215	T112A6	6.8
5.5	174	2398	1.5	CB180	T112A6	5.5
5.5	518	2292	2.0	CB215	T90L2	6.3
5.5	261	2262	1.5	CB180	T100A4	5.0
5.4	525	2167	1.3	CB180	T90L2	4.6
5.4	177	2714	3.4	CB250	T112A6	13
5.4	174	2451	2.5	CB215	T100BL6	6.8
5.4	174	2451	1.5	CB180	T100BL6	5.5
5.4	267	2391	2.1	CB215	T100A4	6.4
5.3	177	2770	3.4	CB250	T100BL6	13
5.1	280	2261	1.6	85/180	T100A4	3.2
5.1	280	2261	1.6	110/180	T100A4	5.6
5.1	280	2344	1.6	130/180	T100A4	8.4
5.1	280	2179	1.2	85/150	T100A4	3.2
5.1	280	2220	1.1	110/150	T100A4	5.6
5.1	280	2097	0.8	85/130	T100A4	3.2
5.1	280	2097	0.8	70/130	T100A4	2.2
5.0	573	2325	2.4	CB250	T90L2	8.4
5.0	288	2495	1.0	CB150	T100A4	3.6
5.0	288	2409	0.7	CB130	T100A4	2.6
5.0	576	2250	0.7	CB150	T90L2	3.2
4.9	290	2642	3.2	CB250	T100A4	11
4.9	293	2626	2.7	110/215	T100A4	5.6
4.8	300	2687	3.9	130/250	T100A4	8.4
4.8	300	2731	2.0	CB215	T100A4	6.6
4.8	600	2345	1.8	CB215	T90L2	5.3
4.8	600	2388	1.1	CB180	T90L2	4.4
4.8	202	2654	1.0	CB150	T112A6	3.7
4.8	202	2566	0.6	CB130	T112A6	2.5
4.7	304	2593	1.4	CB180	T100A4	4.9
4.7	202	2710	0.9	CB150	T100BL6	3.7
4.7	202	2621	0.6	CB130	T100BL6	2.5
4.6	207	2853	3.2	CB250	T112A6	10
4.5	207	2916	3.1	CB250	T100BL6	10
4.5	213	2888	2.0	CB215	T112A6	6.6
4.5	213	2748	1.3	CB180	T112A6	5.0
4.4	323	2751	0.8	CB150	T100A4	3.5
4.4	213	2954	1.9	CB215	T100BL6	6.6
4.4	213	2811	1.3	CB180	T100BL6	5.0
4.2	231	2929	0.9	CB150	T112A6	3.5
4.1	231	2994	0.9	CB150	T100BL6	3.5
4.0	710	2882	2.0	CB250	T90L2	8.4
4.0	240	3309	2.8	CB250	T112A6	10
4.0	360	3228	2.8	CB250	T100A4	9.7
3.9	240	3377	2.8	CB250	T100BL6	10
3.9	368	3078	1.2	CB180	T100A4	4.7
3.9	248	3312	1.8	CB215	T112A6	6.4
3.9	248	3148	1.2	CB180	T112A6	4.9
3.8	375	3254	1.7	CB215	T100A4	6.1

1.7 - *Gearmotors*

n_2 min^{-1}	ir	T2 Nm	FS'		2.2 kW	Ptn kW
3.8	750	2930	1.3	CB215	T90L2	5.3
3.8	750	2764	0.8	CB180	T90L2	4.1
3.8	248	3382	1.7	CB215	T100BL6	6.4
3.8	248	3215	1.2	CB180	T100BL6	4.9
3.7	261	3254	1.2	CB180	T112A6	4.7
3.7	390	3435	2.1	110/215	T100A4	4.4
3.6	267	3385	1.7	CB215	T112A6	6.0
3.6	261	3326	1.1	CB180	T100BL6	4.7
3.6	400	3110	3.4	130/250	T100A4	6.4
3.6	400	3404	1.4	110/180	T100A4	4.4
3.6	400	3287	1.3	85/180	T100A4	2.4
3.6	400	3462	1.3	130/180	T100A4	6.4
3.6	400	3227	0.9	85/150	T100A4	2.4
3.6	400	3346	0.9	110/150	T100A4	4.4
3.6	403	3315	0.7	CB150	T100A4	3.4
3.5	267	3462	1.6	CB215	T100BL6	6.0
3.4	420	3523	1.0	CB180	T100A4	4.7
3.3	428	3586	1.4	CB215	T100A4	5.8
3.3	288	3596	0.8	CB150	T112A6	3.4
3.3	290	3809	2.5	CB250	T112A6	10
3.3	435	3768	2.2	CB250	T100A4	9.2
3.3	434	3385	0.9	CB180	T100A4	4.3
3.3	288	3673	0.7	CB150	T100BL6	3.4
3.2	290	3891	2.4	CB250	T100BL6	10
3.2	300	3939	1.5	CB215	T112A6	6.3
3.2	304	3723	1.0	CB180	T112A6	4.6
3.1	300	4028	1.5	CB215	T100BL6	6.3
3.1	304	3808	1.0	CB180	T100BL6	4.6
2.8	508	3963	1.6	CB250	T100A4	8.1
2.8	518	4262	1.2	CB215	T100A4	5.7
2.7	525	4016	0.8	CB180	T100A4	4.3
2.7	360	4643	2.1	CB250	T112A6	9.2
2.6	360	4750	2.1	CB250	T100BL6	9.2
2.6	368	4428	0.9	CB180	T112A6	4.5
2.6	375	4678	1.3	CB215	T112A6	5.8
2.6	368	4532	0.9	CB180	T100BL6	4.5
2.5	375	4771	1.3	CB215	T100BL6	5.8
2.5	573	4287	1.6	CB250	T100A4	7.7
2.4	600	4061	2.5	130/250	T100A4	6.8
2.4	600	4502	1.4	110/215	T100A4	4.6
2.4	600	4326	1.1	CB215	T100A4	4.9
2.4	600	4060	1.0	85/180	T100A4	2.7
2.4	600	4149	1.0	110/180	T100A4	4.6
2.4	600	4237	1.0	130/180	T100A4	6.8
2.4	600	3972	0.7	85/150	T100A4	2.7
2.4	600	4062	0.7	110/150	T100A4	4.6
2.4	600	4504	0.7	CB180	T100A4	4.2
2.3	420	5046	0.8	CB180	T112A6	4.5
2.2	428	5065	1.1	CB215	T112A6	5.4
2.2	420	5159	0.8	CB180	T100BL6	4.5
2.2	435	5419	1.6	CB250	T112A6	8.8
2.2	434	4848	0.7	CB180	T112A6	4.2
2.2	428	5157	1.1	CB215	T100BL6	5.4
2.2	434	4937	0.7	CB180	T100BL6	4.2
2.2	435	5545	1.6	CB250	T100BL6	8.8
2.0	710	5330	1.2	CB250	T100A4	7.7
1.9	750	5390	0.8	CB215	T100A4	4.9
1.9	508	5670	1.2	CB250	T112A6	7.7
1.9	508	5791	1.2	CB250	T100BL6	7.7
1.9	518	6020	1.0	CB215	T112A6	5.3
1.8	525	5739	0.6	CB180	T112A6	4.1
1.8	518	6151	0.9	CB215	T100BL6	5.3
1.8	525	5868	0.6	CB180	T100BL6	4.1
1.7	573	6129	1.2	CB250	T112A6	7.4
1.6	573	6278	1.2	CB250	T100BL6	7.4
1.6	600	6172	0.9	CB215	T112A6	4.7
1.6	600	6290	0.8	CB215	T100BL6	4.7
1.5	956	6723	1.1	110/215	T100A4	2.7
1.5	980	6908	1.5	130/250	T100A4	3.6
1.5	980	6765	0.7	110/180	T100A4	2.7
1.5	980	6908	0.7	130/180	T100A4	3.6
1.4	710	7313	1.0	CB250	T112A6	7.2
1.3	710	7481	1.0	CB250	T100BL6	7.2
1.3	750	7717	0.6	CB215	T112A6	4.7
1.3	750	7903	0.6	CB215	T100BL6	4.7
1.0	1372	9496	0.8	110/215	T100A4	2.7
1.0	1446	8701	1.2	130/250	T100A4	3.6
0.7	1960	11225	0.9	130/250	T100A4	3.6
0.7	1960	11226	0.6	110/215	T100A4	2.7
0.5	2800	15650	0.7	130/250	T100A4	3.3

1.7 - Getriebemotoren

n_2 min^{-1}	ir	T2 Nm	FS'		3.0 kW	Ptn kW
576	5	43.8	1.8	R63	T90LB2	2.5
416	7	59.3	5.8	R110	T100A2	6.0
416	7	59.3	3.0	R85	T100A2	3.4
416	7	59.3	1.6	R70	T100A2	2.5
411	7	59.9	3.0	R85	T90LB2	3.4
411	7	59.9	1.6	R70	T90LB2	2.5
411	7	59.9	1.4	R63	T90LB2	2.2
291	10	83.7	4.7	R110	T100A2	5.6
291	10	83.7	2.5	R85	T100A2	3.2
291	10	82.7	1.3	R70	T100A2	2.2
288	10	84.6	2.4	R85	T90LB2	3.2
288	10	83.6	1.3	R70	T90LB2	2.2
288	10	83.6	1.1	R63	T90LB2	2.0
204	7	123.4	5.7	R130	T100B4	9.1
204	7	120.6	4.0	R110	T100B4	6.0
204	7	119.2	2.1	R85	T100B4	3.4
204	7	119.2	1.1	R70	T100B4	2.5
194	15	124.1	5.0	R130	T100A2	6.8
194	15	122.6	3.2	R110	T100A2	4.6
194	15	121.1	1.7	R85	T100A2	2.7
194	15	121.1	0.9	R70	T100A2	1.9
192	15	122.4	1.7	R85	T90LB2	2.7
192	15	122.4	0.9	R70	T90LB2	1.9
192	15	122.3	0.8	R63	T90LB2	1.7
146	20	165.4	6.5	R150	T100A2	9.3
146	20	163.4	4.2	R130	T100A2	6.4
146	20	161.5	2.9	R110	T100A2	4.4
146	20	159.5	1.5	R85	T100A2	2.4
144	20	161.2	1.5	R85	T90LB2	2.4
144	20	159.1	0.7	R70	T90LB2	1.7
144	20	159.2	0.7	R63	T90LB2	1.5
143	10	174.3	4.5	R130	T100B4	8.4
143	10	170.3	3.2	R110	T100B4	5.6
143	10	168.3	1.7	R85	T100B4	3.2
143	10	166.3	0.9	R70	T100B4	2.2
139	7	179.9	4.8	R130	T132S6	8.4
139	7	175.7	3.3	R110	T132S6	5.6
137	7	181.7	4.7	R130	T112B6	8.4
137	7	177.6	3.2	R110	T112B6	5.6
137	7	175.5	1.7	R85	T112B6	3.2
137	7	175.5	0.9	R70	T112B6	2.4
104	28	212.3	4.5	R150	T100A2	6.2
104	28	209.5	2.9	R130	T100A2	4.5
104	28	212.3	2.0	R110	T100A2	3.3
104	28	206.8	1.0	R85	T100A2	1.8
103	28	208.9	1.0	R85	T90LB2	1.8
97	10	254.0	5.6	R150	T132S6	11
97	10	251.1	3.8	R130	T132S6	7.2
97	10	248.1	2.6	R110	T132S6	5.2
96	10	256.7	5.5	R150	T112B6	11
96	10	253.7	3.7	R130	T112B6	7.2
96	10	250.7	2.6	R110	T112B6	5.2
96	10	247.7	1.3	R85	T112B6	3.0
96	10	244.7	0.7	R70	T112B6	2.1
95	15	255.4	5.0	R150	T100B4	9.9
95	15	252.5	3.3	R130	T100B4	6.8
95	15	246.4	2.2	R110	T100B4	4.6
95	15	243.4	1.2	R85	T100B4	2.7
95	15	240.5	0.6	R70	T100B4	1.9
73	40	319.0	5.3	CB150	T100A2	7.8
73	40	299.3	3.6	R150	T100A2	6.0
73	40	315.0	3.5	CB130	T100A2	5.6
73	40	291.4	2.4	R130	T100A2	4.0
73	40	291.4	1.7	R110	T100A2	3.0
73	40	283.6	0.9	R85	T100A2	1.6
72	40	322.3	5.2	CB150	T90LB2	7.8
72	40	318.3	3.5	CB130	T90LB2	5.6
72	40	294.4	1.7	R110	T90LB2	3.0
72	40	286.5	0.8	R85	T90LB2	1.6
72	20	336.6	4.2	R150	T100B4	9.3
72	20	332.6	2.8	R130	T100B4	6.4
72	20	324.6	1.9	R110	T100B4	4.4
72	20	316.5	1.0	R85	T100B4	2.4
68	43	338.7	1.9	CB110	T100A2	4.2
67	43	342.2	1.8	CB110	T90LB2	4.2
67	43	338.0	1.0	CB85	T90LB2	2.4
65	15	376.6	5.7	R180	T132S6	14
65	15	367.7	4.1	R150	T132S6	8.8
65	15	367.7	2.7	R130	T132S6	6.4
65	15	354.4	1.8	R110	T132S6	4.2
64	15	371.6	4.0	R150	T112B6	8.8

1.7 - Motoriduttori

n_2 min^{-1}	ir	T2 Nm	FS'		3.0 kW	Ptn kW
64	15	371.5	2.7	R130	T112B6	6.4
64	15	358.1	1.8	R110	T112B6	4.2
64	15	353.6	0.9	R85	T112B6	2.4
59	49	357.0	2.9	R150	T100A2	5.5
59	49	347.3	2.0	R130	T100A2	3.6
59	49	347.3	1.3	R110	T100A2	2.7
59	49	350.9	1.3	R110	T90LB2	2.7
59	49	341.3	0.7	R85	T90LB2	1.6
58	50	393.8	4.6	CB150	T100A2	7.4
58	50	388.9	3.1	CB130	T100A2	5.3
58	50	397.9	4.6	CB150	T90LB2	7.4
58	50	392.9	3.0	CB130	T90LB2	5.3
57	51	401.7	1.6	CB110	T100A2	4.2
56	51	405.9	1.6	CB110	T90LB2	4.2
56	51	400.9	0.8	CB85	T90LB2	2.4
56	52	414.7	6.4	CB180	T100A2	11
55	52	419.0	6.3	CB180	T90LB2	11
52	56	408.0	2.5	R150	T100A2	5.5
52	56	397.0	1.6	R130	T100A2	3.5
52	56	391.5	0.9	R110	T100A2	2.7
51	56	395.5	0.9	R110	T90LB2	2.7
51	28	426.3	3.0	R150	T100B4	6.2
51	28	426.4	1.9	R130	T100B4	4.5
51	28	420.8	1.4	R110	T100B4	3.3
51	28	403.8	0.7	R85	T100B4	1.8
50	58	451.1	4.0	CB150	T100A2	7.1
50	58	451.2	2.7	CB130	T100A2	5.3
50	58	455.8	4.0	CB150	T90LB2	7.1
50	58	455.8	2.6	CB130	T90LB2	5.3
49	59	464.7	1.5	CB110	T100A2	4.2
49	59	469.6	1.4	CB110	T90LB2	4.2
49	59	463.8	0.8	CB85	T90LB2	2.4
49	20	490.3	4.9	R180	T132S6	12
49	20	484.4	3.5	R150	T132S6	8.3
49	20	484.4	2.2	R130	T132S6	6.0
48	20	489.4	3.4	R150	T112B6	8.3
48	20	489.4	2.2	R130	T112B6	6.0
48	20	471.5	1.5	R110	T112B6	4.0
48	20	459.6	0.8	R85	T112B6	2.2
47	62	488.3	5.3	CB180	T100A2	10
46	62	493.4	5.3	CB180	T90LB2	10
42	69	536.7	1.3	CB110	T100A2	4.2
42	69	542.3	1.3	CB110	T90LB2	4.2
42	69	535.3	0.7	CB85	T90LB2	2.4
42	70	482.5	1.9	R150	T100A2	4.5
42	70	475.6	1.3	R130	T100A2	3.3
42	70	468.6	0.8	R110	T100A2	2.3
41	70	473.5	0.8	R110	T90LB2	2.3
40	72	560.0	3.5	CB150	T100A2	7.1
40	72	552.9	2.3	CB130	T100A2	5.1
40	72	565.9	3.4	CB150	T90LB2	7.1
40	72	558.7	2.3	CB130	T90LB2	5.1
39	75	583.3	4.7	CB180	T100A2	9.7
39	37	593.0	5.0	CB180	T100B4	10
38	75	589.4	4.7	CB180	T90LB2	9.7
36	80	543.4	1.6	R150	T100A2	4.4
36	80	567.1	1.2	CB110	T100A2	3.2
36	80	535.5	1.2	R130	T100A2	3.0
36	80	519.8	0.8	R110	T100A2	2.2
36	80	572.9	1.2	CB110	T90LB2	3.2
36	80	525.1	0.7	R110	T90LB2	2.2
36	40	633.1	3.3	CB150	T100B4	7.1
36	40	601.0	2.3	R150	T100B4	6.0
36	40	625.1	2.2	CB130	T100B4	5.1
36	40	585.0	1.5	R130	T100B4	4.0
36	40	577.0	1.1	R110	T100B4	3.0
35	28	694.7	4.6	R215	T132S6	16
35	28	636.8	3.5	R180	T132S6	9.0
35	28	612.1	2.5	R150	T132S6	5.7
35	28	620.3	1.5	R130	T132S6	4.3
34	28	618.3	2.4	R150	T112B6	5.7
34	28	626.6	1.5	R130	T112B6	4.3
34	28	601.6	1.1	R110	T112B6	3.0
34	85	635.9	4.3	CB180	T100A2	8.5
34	85	635.9	3.0	CB150	T100A2	6.2
34	85	619.2	1.9	CB130	T100A2	4.3
34	85	642.7	4.2	CB180	T90LB2	8.5
34	85	642.7	2.9	CB150	T90LB2	6.2
34	85	625.8	1.9	CB130	T90LB2	4.3
33	43	671.8	1.1	CB110	T100B4	3.8

1.7 - *Gearmotors*

n_2 min^{-1}	ir	T2 Nm	FS'		3.0 kW	Ptn kW
29	49	697.1	1.9	R150	T100B4	5.5
29	49	687.3	1.3	R130	T100B4	3.6
29	49	677.4	0.9	R110	T100B4	2.7
29	100	649.7	1.3	R150	T100A2	3.9
29	100	630.2	0.9	R130	T100A2	2.7
29	50	781.3	2.8	CB150	T100B4	6.7
29	50	781.4	1.9	CB130	T100B4	5.1
28	51	796.9	1.0	CB110	T100B4	3.8
28	52	823.0	4.0	CB180	T100B4	9.7
27	107	790.0	3.7	CB180	T100A2	8.2
27	107	798.2	3.6	CB180	T90LB2	8.2
26	110	779.9	0.9	CB110	T100A2	3.2
26	37	852.3	3.9	CB180	T132S6	9.3
26	110	788.0	0.9	CB110	T90LB2	3.2
26	112	860.2	6.2	CB215	T100A2	11
26	37	861.1	3.9	CB180	T112B6	9.3
26	112	869.2	6.1	CB215	T90LB2	11
26	56	818.8	1.6	R150	T100B4	5.5
26	56	774.0	1.1	R130	T100B4	3.5
26	56	774.1	0.6	R110	T100B4	2.7
25	115	849.3	2.4	CB150	T100A2	5.9
25	115	826.7	1.6	CB130	T100A2	4.2
25	115	858.1	2.4	CB150	T90LB2	5.9
25	115	835.3	1.6	CB130	T90LB2	4.2
25	58	894.6	2.5	CB150	T100B4	6.4
25	58	894.7	1.6	CB130	T100B4	4.9
24	40	909.7	6.4	R250	T132S6	17
24	40	909.7	4.0	R215	T132S6	11
24	40	862.4	2.7	R180	T132S6	7.7
24	40	921.5	2.5	CB150	T132S6	6.7
24	40	862.4	1.9	R150	T132S6	5.5
24	40	909.6	1.7	CB130	T132S6	4.7
24	40	838.9	1.2	R130	T132S6	3.7
24	59	898.3	1.0	CB110	T100B4	3.8
24	121	905.4	5.5	CB215	T100A2	10
24	40	931.1	2.5	CB150	T112B6	6.7
24	40	871.5	1.9	R150	T112B6	5.5
24	40	919.2	1.7	CB130	T112B6	4.7
24	40	847.5	1.2	R130	T112B6	3.7
24	40	811.7	0.9	R110	T112B6	2.6
24	121	914.9	5.4	CB215	T90LB2	10
23	124	915.6	3.3	CB180	T100A2	8.2
23	124	925.0	3.3	CB180	T90LB2	8.2
23	42	967.4	6.2	CB215	T132S6	11
23	62	969.1	6.0	CB215	T100B4	11
23	62	969.1	3.3	CB180	T100B4	9.3
23	42	977.6	6.1	CB215	T112B6	11
23	129	901.6	0.8	CB110	T100A2	3.2
22	43	975.2	0.9	CB110	T112B6	3.8
22	129	911.0	0.8	CB110	T90LB2	3.2
21	69	1051	0.8	CB110	T100B4	3.8
20	70	940	1.3	R150	T100B4	4.5
20	70	940	0.9	R130	T100B4	3.3
20	144	1049	2.1	CB150	T100A2	5.7
20	144	1021	1.4	CB130	T100A2	4.0
20	144	1060	2.1	CB150	T90LB2	5.7
20	144	1032	1.3	CB130	T90LB2	4.0
19.9	146	1093	4.8	CB215	T100A2	10
19.9	72	1111	2.1	CB150	T100B4	6.4
19.9	72	1097	1.4	CB130	T100B4	4.7
19.8	49	1085	5.3	R250	T132S6	16
19.8	49	1042	2.3	R180	T132S6	7.4
19.8	49	999	1.5	R150	T132S6	4.8
19.7	146	1104	4.7	CB215	T90LB2	10
19.6	49	1009	1.5	R150	T112B6	4.8
19.6	49	1009	1.0	R130	T112B6	3.5
19.6	49	965	0.7	R110	T112B6	2.5
19.4	50	1093	3.3	R215	T132S6	9.9
19.4	150	1093	2.9	CB180	T100A2	7.9
19.4	50	1137	2.2	CB150	T132S6	6.4
19.4	50	1137	1.4	CB130	T132S6	4.5
19.2	150	1104	2.9	CB180	T90LB2	7.9
19.2	50	1149	2.2	CB150	T112B6	6.4
19.2	50	1149	1.4	CB130	T112B6	4.5
19.1	75	1172	5.2	CB215	T100B4	11
19.1	75	1157	2.9	CB180	T100B4	8.9
18.8	51	1127	0.9	CB110	T112B6	3.4
18.7	52	1198	3.0	CB180	T132S6	9.3
18.5	52	1211	3.0	CB180	T112B6	9.3
18.3	53	1206	5.2	CB215	T132S6	11

1.7 - Getriebemotoren

n_2 min^{-1}	ir	T2 Nm	FS'		3.0 kW	Ptn kW
18.1	53	1218	5.2	CB215	T112B6	11
18.0	162	1069	1.7	CB150	T100A2	4.5
18.0	162	1037	1.1	CB130	T100A2	3.2
17.9	80	1218	4.8	CB215	T100B4	10
17.9	80	1057	1.1	R150	T100B4	4.4
17.9	80	1026	0.8	R130	T100B4	3.0
17.9	80	1106	0.7	CB110	T100B4	2.9
17.8	162	1080	1.7	CB150	T90LB2	4.5
17.8	162	1047	1.1	CB130	T90LB2	3.2
17.3	56	1175	2.1	R180	T132S6	7.2
17.3	56	1125	1.3	R150	T132S6	4.7
17.3	168	1092	0.6	CB110	T100A2	2.6
17.1	56	1137	1.3	R150	T112B6	4.7
17.1	56	1137	0.8	R130	T112B6	3.4
17.1	168	1103	0.6	CB110	T90LB2	2.6
17.0	57	1195	2.9	R215	T132S6	8.8
16.8	85	1260	2.6	CB180	T100B4	7.9
16.8	85	1243	1.8	CB150	T100B4	5.5
16.8	85	1226	1.2	CB130	T100B4	4.0
16.7	174	1080	4.3	CB215	T100A2	6.8
16.7	174	1165	2.4	CB180	T100A2	6.4
16.7	58	1302	1.9	CB150	T132S6	6.2
16.7	58	1302	1.2	CB130	T132S6	4.3
16.6	174	1091	4.3	CB215	T90LB2	6.8
16.6	174	1177	2.4	CB180	T90LB2	6.4
16.6	58	1316	1.9	CB150	T112B6	6.2
16.6	58	1316	1.2	CB130	T112B6	4.3
16.4	177	1290	5.5	CB250	T100A2	15
16.3	177	1303	5.4	CB250	T90LB2	15
16.3	59	1303	0.8	CB110	T112B6	3.4
16.2	60	1311	4.2	R250	T132S6	15
15.9	90	1406	6.5	CB250	T100B4	17
15.7	62	1428	6.5	CB250	T132S6	17
15.7	62	1410	4.6	CB215	T132S6	11
15.7	62	1410	2.5	CB180	T132S6	8.9
15.5	62	1444	6.5	CB250	T112B6	17
15.5	62	1425	4.6	CB215	T112B6	11
15.5	62	1425	2.5	CB180	T112B6	8.9
14.4	202	1312	1.5	CB150	T100A2	4.4
14.4	202	1273	1.0	CB130	T100A2	3.1
14.3	100	1242	0.8	R150	T100B4	3.9
14.3	202	1326	1.5	CB150	T90LB2	4.4
14.3	202	1286	1.0	CB130	T90LB2	3.1
14.1	207	1386	5.0	CB250	T100A2	12
14.1	69	1447	2.5	R215	T132S6	8.8
13.9	207	1401	4.9	CB250	T90LB2	12
13.9	69	1524	0.7	CB110	T112B6	3.4
13.9	70	1406	3.6	R250	T132S6	12
13.9	70	1364	1.6	R180	T132S6	6.1
13.9	70	1303	1.0	R150	T132S6	4.0
13.7	70	1316	1.0	R150	T112B6	4.0
13.7	70	1296	0.7	R130	T112B6	2.9
13.7	213	1426	3.0	CB215	T100A2	7.8
13.7	213	1363	2.0	CB180	T100A2	5.8
13.5	213	1441	3.0	CB215	T90LB2	7.8
13.5	213	1378	2.0	CB180	T90LB2	5.8
13.5	72	1595	1.6	CB150	T132S6	5.9
13.5	72	1595	1.1	CB130	T132S6	4.2
13.4	107	1566	2.2	CB180	T100B4	7.6
13.3	72	1612	1.6	CB150	T112B6	5.9
13.3	72	1612	1.1	CB130	T112B6	4.2
13.1	109	1703	5.6	CB250	T100B4	17
13.0	110	1455	0.6	CB110	T100B4	2.9
12.9	75	1684	4.1	CB215	T132S6	10
12.9	75	1684	2.2	CB180	T132S6	8.5
12.8	75	1701	4.0	CB215	T112B6	10
12.8	75	1701	2.2	CB180	T112B6	8.5
12.8	112	1683	3.8	CB215	T100B4	10
12.6	231	1455	1.4	CB150	T100A2	4.1
12.6	231	1410	0.9	CB130	T100A2	3.0
12.5	231	1470	1.3	CB150	T90LB2	4.1
12.5	231	1424	0.9	CB130	T90LB2	3.0
12.4	78	1773	5.5	CB250	T132S6	16
12.4	115	1660	1.5	CB150	T100B4	5.3
12.4	115	1637	0.9	CB130	T100B4	3.9
12.3	78	1792	5.5	CB250	T112B6	16
12.3	79	1563	2.9	R250	T132S6	12
12.1	240	1584	4.5	CB250	T100A2	11
12.1	80	1773	3.7	CB215	T132S6	10
12.1	80	1513	2.1	R215	T132S6	7.1

1.7 - Motoriduttori

n_2 min^{-1}	ir	T2 Nm	FS'		3.0 kW	Ptn kW
12.1	80	1537	1.4	R180	T132S6	5.9
12.1	80	1466	0.9	R150	T132S6	3.9
12.0	240	1600	4.5	CB250	T90LB2	11
12.0	80	1791	3.6	CB215	T112B6	10
12.0	80	1480	0.9	R150	T112B6	3.9
12.0	80	1433	0.6	R130	T112B6	2.7
11.9	120	1779	4.9	CB250	T100B4	15
11.8	121	1794	3.3	CB215	T100B4	9.6
11.7	248	1637	2.7	CB215	T100A2	7.6
11.7	248	1563	1.9	CB180	T100A2	5.7
11.6	248	1653	2.7	CB215	T90LB2	7.6
11.6	248	1579	1.8	CB180	T90LB2	5.7
11.5	124	1789	2.0	CB180	T100B4	7.3
11.4	85	1808	2.0	CB180	T132S6	7.3
11.4	85	1808	1.4	CB150	T132S6	5.3
11.4	85	1758	0.9	CB130	T132S6	3.5
11.3	85	1827	2.0	CB180	T112B6	7.3
11.3	85	1827	1.4	CB150	T112B6	5.3
11.3	85	1776	0.9	CB130	T112B6	3.5
11.2	261	1619	1.8	CB180	T100A2	5.5
11.0	261	1636	1.7	CB180	T90LB2	5.5
10.9	267	1709	2.5	CB215	T100A2	7.2
10.8	267	1726	2.5	CB215	T90LB2	7.2
10.8	90	2047	5.0	CB250	T132S6	16
10.7	90	2068	4.9	CB250	T112B6	16
10.5	136	1827	3.3	110/215	T100B4	6.0
10.2	140	1824	4.9	130/250	T100B4	9.1
10.2	140	1824	2.1	110/180	T100B4	6.0
10.2	140	1824	2.1	85/180	T100B4	3.4
10.2	140	1880	2.0	130/180	T100B4	9.1
10.2	140	1796	1.5	85/150	T100B4	3.4
10.2	140	1824	1.4	110/150	T100B4	6.0
10.2	140	1740	1.0	70/130	T100B4	2.5
10.2	140	1740	1.0	85/130	T100B4	3.4
10.1	288	1759	1.2	CB150	T100A2	3.9
10.1	288	1731	0.8	CB130	T100A2	2.9
10.0	290	1857	3.9	CB250	T100A2	11
10.0	288	1776	1.2	CB150	T90LB2	3.9
10.0	288	1748	0.8	CB130	T90LB2	2.9
9.9	290	1875	3.8	CB250	T90LB2	11
9.9	144	2048	1.3	CB150	T100B4	5.1
9.9	144	2019	0.8	CB130	T100B4	3.7
9.9	98	1939	2.3	R250	T132S6	12
9.9	145	2150	4.2	CB250	T100B4	15
9.8	146	2136	2.9	CB215	T100B4	9.3
9.7	300	1949	2.4	CB215	T100A2	7.4
9.7	100	1890	1.6	R215	T132S6	7.1
9.7	100	1802	1.0	R180	T132S6	5.3
9.7	100	1713	0.7	R150	T132S6	3.5
9.6	300	1970	2.4	CB215	T90LB2	7.4
9.6	100	1731	0.7	R150	T112B6	3.5
9.6	304	1856	1.6	CB180	T100A2	5.4
9.5	150	2165	1.8	CB180	T100B4	7.3
9.5	304	1876	1.6	CB180	T90LB2	5.4
9.1	107	2243	1.7	CB180	T132S6	7.0
9.0	323	1940	0.9	CB150	T100A2	3.8
9.0	107	2268	1.7	CB180	T112B6	7.0
8.9	323	1959	0.9	CB150	T90LB2	3.8
8.9	109	2479	4.2	CB250	T132S6	16
8.8	162	2044	1.1	CB150	T100B4	4.0
8.8	162	2012	0.7	CB130	T100B4	3.0
8.8	109	2504	4.2	CB250	T112B6	16
8.7	112	2448	2.9	CB215	T132S6	9.6
8.6	112	2474	2.9	CB215	T112B6	9.6
8.4	115	2379	1.1	CB150	T132S6	4.9
8.4	115	2345	0.7	CB130	T132S6	3.4
8.4	115	2402	1.1	CB150	T112B6	4.9
8.4	115	2367	0.7	CB130	T112B6	3.4
8.2	174	2196	2.5	CB215	T100B4	6.8
8.2	174	2265	1.5	CB180	T100B4	5.8
8.1	120	2589	3.7	CB250	T132S6	14
8.1	360	2269	3.3	CB250	T100A2	11
8.1	177	2553	3.3	CB250	T100B4	14
8.0	121	2572	2.6	CB215	T132S6	8.9
8.0	120	2614	3.7	CB250	T112B6	14
8.0	360	2292	3.3	CB250	T90LB2	11
7.9	121	2601	2.5	CB215	T112B6	8.9
7.9	368	2209	1.4	CB180	T100A2	5.2
7.8	368	2232	1.4	CB180	T90LB2	5.2
7.8	124	2601	1.5	CB180	T132S6	7.0

1.7 - *Gearmotors*

n_2 min^{-1}	ir	T2 Nm	FS'		3.0 kW	Ptn kW
7.8	375	2326	2.0	CB215	T100A2	6.8
7.7	124	2628	1.5	CB180	T112B6	7.0
7.7	375	2350	2.0	CB215	T90LB2	6.8
7.3	195	2541	2.6	110/215	T100B4	5.6
7.2	403	2381	0.8	CB150	T100A2	3.7
7.2	200	2404	4.1	130/250	T100B4	8.4
7.2	200	2484	1.6	85/180	T100B4	3.2
7.2	200	2525	1.6	110/180	T100B4	5.6
7.2	200	2565	1.6	130/180	T100B4	8.4
7.2	200	2444	1.2	85/150	T100B4	3.2
7.2	200	2484	1.1	110/150	T100B4	5.6
7.2	403	2404	0.8	CB150	T90LB2	3.7
7.2	200	2364	0.8	70/130	T100B4	2.2
7.2	200	2404	0.7	85/130	T100B4	3.2
7.1	202	2509	0.9	CB150	T100B4	3.9
6.9	420	2522	1.2	CB180	T100A2	5.2
6.9	207	2695	3.1	CB250	T100B4	11
6.9	420	2548	1.2	CB180	T90LB2	5.2
6.8	428	2570	1.7	CB215	T100A2	6.4
6.7	144	2976	1.0	CB150	T132S6	4.9
6.7	144	2890	0.6	CB130	T132S6	3.3
6.7	428	2597	1.7	CB215	T90LB2	6.4
6.7	213	2733	1.9	CB215	T100B4	7.0
6.7	213	2604	1.3	CB180	T100B4	5.2
6.7	434	2433	1.1	CB180	T100A2	4.7
6.7	145	3083	3.3	CB250	T132S6	14
6.7	435	2698	2.6	CB250	T100A2	10
6.7	144	3006	0.9	CB150	T112B6	4.9
6.7	144	2922	0.6	CB130	T112B6	3.3
6.6	146	3064	2.2	CB215	T132S6	8.6
6.6	434	2460	1.1	CB180	T90LB2	4.7
6.6	145	3116	3.2	CB250	T112B6	14
6.6	435	2726	2.6	CB250	T90LB2	10
6.6	146	3091	2.2	CB215	T112B6	8.6
6.5	150	3100	1.4	CB180	T132S6	6.8
6.4	150	3134	1.3	CB180	T112B6	6.8
6.2	231	2777	0.8	CB150	T100B4	3.7
6.0	162	2918	0.8	CB150	T132S6	3.8
6.0	240	3077	2.8	CB250	T100B4	11
5.9	162	2947	0.8	CB150	T112B6	3.8
5.8	248	3128	1.7	CB215	T100B4	6.8
5.8	248	2979	1.2	CB180	T100B4	5.1
5.8	504	2731	0.6	CB150	T100A2	3.3
5.7	508	2850	1.8	CB250	T100A2	8.8
5.7	504	2759	0.6	CB150	T90LB2	3.3
5.7	508	2880	1.8	CB250	T90LB2	8.8
5.6	518	3059	1.5	CB215	T100A2	6.3
5.6	174	3241	1.9	CB215	T132S6	6.8
5.6	174	3240	1.1	CB180	T132S6	5.5
5.6	518	3092	1.5	CB215	T90LB2	6.3
5.5	525	2896	1.0	CB180	T100A2	4.6
5.5	174	3270	1.9	CB215	T112B6	6.8
5.5	174	3270	1.1	CB180	T112B6	5.5
5.5	525	2923	1.0	CB180	T90LB2	4.6
5.5	177	3660	2.6	CB250	T132S6	13
5.5	261	3084	1.1	CB180	T100B4	5.0
5.4	177	3700	2.5	CB250	T112B6	13
5.4	267	3260	1.6	CB215	T100B4	6.4
5.1	280	3083	1.2	110/180	T100B4	5.6
5.1	280	3083	1.2	85/180	T100B4	3.2
5.1	280	3196	1.2	130/180	T100B4	8.4
5.1	280	2972	0.8	85/150	T100B4	3.2
5.1	280	3028	0.8	110/150	T100B4	5.6
5.1	573	3102	1.8	CB250	T100A2	8.4
5.0	573	3133	1.8	CB250	T90LB2	8.4
5.0	288	3402	0.7	CB150	T100B4	3.6
4.9	290	3603	2.4	CB250	T100B4	11
4.9	293	3581	2.0	110/215	T100B4	5.6
4.9	600	3131	1.3	CB215	T100A2	5.3
4.9	600	3191	0.8	CB180	T100A2	4.4
4.8	600	3164	1.3	CB215	T90LB2	5.3
4.8	600	3223	0.8	CB180	T90LB2	4.4
4.8	202	3581	0.7	CB150	T132S6	3.7
4.8	300	3664	2.9	130/250	T100B4	8.4
4.8	300	3724	1.5	CB215	T100B4	6.6
4.8	202	3620	0.7	CB150	T112B6	3.7
4.7	304	3536	1.0	CB180	T100B4	4.9
4.7	207	3848	2.4	CB250	T132S6	10
4.6	207	3890	2.3	CB250	T112B6	10
4.6	213	3904	1.4	CB215	T132S6	6.6

1.7 - Getriebemotoren

n_2 min^{-1}	ir	T2 Nm	FS'		3.0 kW	Ptn kW
4.6	213	3715	1.0	CB180	T132S6	5.0
4.5	213	3938	1.4	CB215	T112B6	6.6
4.5	213	3748	1.0	CB180	T112B6	5.0
4.2	231	3956	0.7	CB150	T132S6	3.5
4.2	231	3994	0.6	CB150	T112B6	3.5
4.1	710	3844	1.5	CB250	T100A2	8.4
4.1	710	3881	1.5	CB250	T90LB2	8.4
4.0	240	4467	2.1	CB250	T132S6	10
4.0	240	4513	2.1	CB250	T112B6	10
4.0	360	4402	2.0	CB250	T100B4	9.7
3.9	248	4470	1.3	CB215	T132S6	6.4
3.9	248	4250	0.9	CB180	T132S6	4.9
3.9	368	4198	0.9	CB180	T100B4	4.7
3.9	750	3913	1.0	CB215	T100A2	5.3
3.9	750	3692	0.6	CB180	T100A2	4.1
3.9	248	4516	1.3	CB215	T112B6	6.4
3.9	248	4293	0.9	CB180	T112B6	4.9
3.8	750	3954	1.0	CB215	T90LB2	5.3
3.8	750	3731	0.6	CB180	T90LB2	4.1
3.8	375	4437	1.2	CB215	T100B4	6.1
3.7	261	4390	0.9	CB180	T132S6	4.7
3.7	261	4437	0.8	CB180	T112B6	4.7
3.7	390	4683	1.5	110/215	T100B4	4.4
3.6	267	4578	1.2	CB215	T132S6	6.0
3.6	267	4616	1.2	CB215	T112B6	6.0
3.6	400	4241	2.5	130/250	T100B4	6.4
3.6	400	4642	1.0	110/180	T100B4	4.4
3.6	400	4482	1.0	85/180	T100B4	2.4
3.6	400	4721	1.0	130/180	T100B4	6.4
3.6	400	4401	0.7	85/150	T100B4	2.4
3.6	400	4562	0.6	110/150	T100B4	4.4
3.4	420	4803	0.8	CB180	T100B4	4.7
3.3	290	5146	1.8	CB250	T132S6	10
3.3	428	4890	1.0	CB215	T100B4	5.8
3.3	290	5194	1.8	CB250	T112B6	10
3.3	435	5138	1.6	CB250	T100B4	9.2
3.3	434	4616	0.7	CB180	T100B4	4.3
3.2	300	5321	1.1	CB215	T132S6	6.3
3.2	300	5372	1.1	CB215	T112B6	6.3
3.2	304	5030	0.8	CB180	T132S6	4.6
3.2	304	5076	0.8	CB180	T112B6	4.6
2.8	508	5404	1.1	CB250	T100B4	8.1
2.8	518	5812	0.9	CB215	T100B4	5.7
2.7	360	6284	1.6	CB250	T132S6	9.2
2.7	360	6331	1.5	CB250	T112B6	9.2
2.6	368	5969	0.7	CB180	T132S6	4.5
2.6	368	6038	0.7	CB180	T112B6	4.5
2.6	375	6306	1.0	CB215	T132S6	5.8
2.6	375	6380	0.9	CB215	T112B6	5.8
2.5	573	5845	1.1	CB250	T100B4	7.7
2.4	600	5538	1.9	130/250	T100B4	6.8
2.4	600	6139	1.0	110/215	T100B4	4.6
2.4	600	5900	0.8	CB215	T100B4	4.9
2.4	600	5537	0.8	85/180	T100B4	2.7
2.4	600	5657	0.7	110/180	T100B4	4.6
2.4	600	5778	0.7	130/180	T100B4	6.8
2.3	428	6814	0.8	CB215	T132S6	5.4
2.2	428	6907	0.8	CB215	T112B6	5.4
2.2	435	7323	1.2	CB250	T132S6	8.8
2.2	435	7390	1.2	CB250	T112B6	8.8
2.0	710	7269	0.9	CB250	T100B4	7.7
1.9	508	7651	0.9	CB250	T132S6	7.7
1.9	750	7351	0.6	CB215	T100B4	4.9
1.9	508	7732	0.9	CB250	T112B6	7.7
1.9	518	8121	0.7	CB215	T132S6	5.3
1.9	518	8209	0.7	CB215	T112B6	5.3
1.7	573	8307	0.9	CB250	T132S6	7.4
1.7	573	8358	0.9	CB250	T112B6	7.4
1.6	600	8314	0.6	CB215	T132S6	4.7
1.6	600	8416	0.6	CB215	T112B6	4.7
1.5	956	9168	0.8	110/215	T100B4	2.7
1.5	980	9420	1.1	130/250	T100B4	3.6
1.4	710	9829	0.7	CB250	T132S6	7.2
1.4	710	9973	0.7	CB250	T112B6	7.2
1.0	1446	11864	0.9	130/250	T100B4	3.6
0.73	1960	15306	0.7	130/250	T100B4	3.6

1.7 - Motoriduttori

n_2 min^{-1}	ir	T2 Nm	FS'		4.0 kW	Ptn kW
419	7	80.3	6.2	R130	T112A2	9.1
419	7	78.5	4.3	R110	T112A2	6.0
419	7	78.5	2.3	R85	T112A2	3.4
419	7	78.5	1.2	R70	T112A2	2.5
417	7	80.6	6.2	R130	T100B2	9.1
417	7	78.8	4.3	R110	T100B2	6.0
417	7	78.8	2.2	R85	T100B2	3.4
417	7	78.8	1.2	R70	T100B2	2.5
293	10	113.4	5.1	R130	T112A2	8.4
293	10	110.8	3.5	R110	T112A2	5.6
293	10	110.8	1.9	R85	T112A2	3.2
293	10	109.5	1.0	R70	T112A2	2.2
292	10	113.8	5.0	R130	T100B2	8.4
292	10	111.2	3.5	R110	T100B2	5.6
292	10	111.2	1.8	R85	T100B2	3.2
292	10	109.9	1.0	R70	T100B2	2.2
206	7	163.4	6.5	R150	T112A4	12
206	7	163.4	4.3	R130	T112A4	9.1
206	7	159.7	3.0	R110	T112A4	6.0
206	7	157.9	1.6	R85	T112A4	3.4
206	7	157.8	0.8	R70	T112A4	2.5
204	7	164.6	6.5	R150	T100BL4	12
204	7	164.5	4.3	R130	T100BL4	9.1
204	7	160.8	3.0	R110	T100BL4	6.0
204	7	158.9	1.6	R85	T100BL4	3.4
204	7	158.9	0.8	R70	T100BL4	2.5
195	15	166.2	5.6	R150	T112A2	9.9
195	15	164.3	3.8	R130	T112A2	6.8
195	15	162.3	2.4	R110	T112A2	4.6
195	15	160.4	1.3	R85	T112A2	2.7
195	15	160.4	0.7	R70	T112A2	1.9
195	15	166.8	5.6	R150	T100B2	9.9
195	15	164.8	3.8	R130	T100B2	6.8
195	15	162.9	2.4	R110	T100B2	4.6
195	15	160.9	1.3	R85	T100B2	2.7
195	15	160.9	0.7	R70	T100B2	1.9
147	20	219.0	4.9	R150	T112A2	9.3
147	20	216.4	3.2	R130	T112A2	6.4
147	20	213.8	2.2	R110	T112A2	4.4
147	20	211.2	1.1	R85	T112A2	2.4
146	20	219.8	4.9	R150	T100B2	9.3
146	20	217.2	3.2	R130	T100B2	6.4
146	20	214.6	2.2	R110	T100B2	4.4
146	20	211.9	1.1	R85	T100B2	2.4
144	10	230.8	5.1	R150	T112A4	11
144	10	230.8	3.4	R130	T112A4	8.4
144	10	225.5	2.4	R110	T112A4	5.6
144	10	222.8	1.3	R85	T112A4	3.2
144	10	220.2	0.6	R70	T112A4	2.2
143	10	232.4	5.1	R150	T100BL4	11
143	10	232.4	3.4	R130	T100BL4	8.4
143	10	227.1	2.4	R110	T100BL4	5.6
143	10	224.4	1.2	R85	T100BL4	3.2
143	10	221.7	0.6	R70	T100BL4	2.2
139	7	239.8	5.4	R150	T132M6	11
139	7	239.8	3.6	R130	T132M6	8.4
139	7	234.3	2.5	R110	T132M6	5.6
105	28	281.1	3.4	R150	T112A2	6.2
105	28	277.5	2.2	R130	T112A2	4.5
105	28	281.1	1.5	R110	T112A2	3.3
105	28	273.8	0.8	R85	T112A2	1.8
104	28	282.0	3.4	R150	T100B2	6.2
104	28	278.4	2.2	R130	T100B2	4.5
104	28	282.0	1.5	R110	T100B2	3.3
104	28	274.7	0.8	R85	T100B2	1.8
97	10	342.6	5.8	R180	T132M6	16
97	10	338.7	4.2	R150	T132M6	11
97	10	334.7	2.8	R130	T132M6	7.2
97	10	330.8	1.9	R110	T132M6	5.2
96	15	338.2	3.8	R150	T112A4	9.9
96	15	334.3	2.5	R130	T112A4	6.8
96	15	326.3	1.6	R110	T112A4	4.6
96	15	322.3	0.9	R85	T112A4	2.7
95	15	340.6	3.7	R150	T100BL4	9.9
95	15	336.6	2.5	R130	T100BL4	6.8
95	15	328.6	1.6	R110	T100BL4	4.6
95	15	324.5	0.9	R85	T100BL4	2.7
79	37	390.7	6.0	CB180	T112A2	11
79	37	392.1	6.0	CB180	T100B2	11
73	40	422.4	4.0	CB150	T112A2	7.8

1.7 - *Gearmotors*

n_2 min^{-1}	ir	T2 Nm	FS'		4.0 kW	Ptn kW
73	40	396.3	2.7	R150	T112A2	6.0
73	40	417.2	2.7	CB130	T112A2	5.6
73	40	385.9	1.8	R130	T112A2	4.0
73	40	385.9	1.3	R110	T112A2	3.0
73	40	375.5	0.6	R85	T112A2	1.6
73	40	423.9	4.0	CB150	T100B2	7.8
73	40	397.7	2.7	R150	T100B2	6.0
73	40	418.6	2.7	CB130	T100B2	5.6
73	40	387.3	1.8	R130	T100B2	4.0
73	40	387.2	1.3	R110	T100B2	3.0
73	40	376.8	0.6	R85	T100B2	1.6
72	20	445.7	3.2	R150	T112A4	9.3
72	20	440.4	2.1	R130	T112A4	6.4
72	20	429.7	1.4	R110	T112A4	4.4
72	20	419.2	0.7	R85	T112A4	2.4
72	20	448.8	3.2	R150	T100BL4	9.3
72	20	443.4	2.1	R130	T100BL4	6.4
72	20	432.8	1.4	R110	T100BL4	4.4
72	20	422.1	0.7	R85	T100BL4	2.4
68	43	448.5	1.4	CB110	T112A2	4.2
68	43	450.0	1.4	CB110	T100B2	4.2
65	15	502.1	4.3	R180	T132M6	14
65	15	490.3	3.1	R150	T132M6	8.8
65	15	490.2	2.0	R130	T132M6	6.4
65	15	472.5	1.3	R110	T132M6	4.2
60	49	472.7	2.2	R150	T112A2	5.5
60	49	459.9	1.5	R130	T112A2	3.6
60	49	459.9	1.0	R110	T112A2	2.7
60	49	474.4	2.2	R150	T100B2	5.5
60	49	461.5	1.5	R130	T100B2	3.6
60	49	461.6	1.0	R110	T100B2	2.7
59	50	521.5	3.5	CB150	T112A2	7.4
59	50	515.0	2.3	CB130	T112A2	5.3
58	50	523.3	3.5	CB150	T100B2	7.4
58	50	516.8	2.3	CB130	T100B2	5.3
57	51	532.0	1.2	CB110	T112A2	4.2
57	51	533.8	1.2	CB110	T100B2	4.2
56	52	549.1	4.8	CB180	T112A2	11
56	52	551.1	4.8	CB180	T100B2	11
52	56	540.3	1.9	R150	T112A2	5.5
52	56	525.7	1.2	R130	T112A2	3.5
52	56	518.3	0.7	R110	T112A2	2.7
52	56	542.1	1.9	R150	T100B2	5.5
52	56	527.5	1.2	R130	T100B2	3.5
52	56	520.2	0.7	R110	T100B2	2.7
51	28	564.5	2.3	R150	T112A4	6.2
51	28	564.5	1.4	R130	T112A4	4.5
51	28	557.0	1.0	R110	T112A4	3.3
51	28	568.4	2.3	R150	T100BL4	6.2
51	28	568.5	1.4	R130	T100BL4	4.5
51	28	561.0	1.0	R110	T100BL4	3.3
51	58	597.4	3.0	CB150	T112A2	7.1
51	58	597.3	2.0	CB130	T112A2	5.3
50	58	599.5	3.0	CB150	T100B2	7.1
50	58	599.5	2.0	CB130	T100B2	5.3
50	59	615.4	1.1	CB110	T112A2	4.2
49	59	617.5	1.1	CB110	T100B2	4.2
49	20	669.5	5.8	R215	T132M6	17
49	20	653.7	3.7	R180	T132M6	12
49	20	645.8	2.6	R150	T132M6	8.3
49	20	645.9	1.7	R130	T132M6	6.0
47	62	646.6	4.0	CB180	T112A2	10
47	62	648.8	4.0	CB180	T100B2	10
42	69	710.8	1.0	CB110	T112A2	4.2
42	69	713.1	1.0	CB110	T100B2	4.2
42	70	638.8	1.5	R150	T112A2	4.5
42	70	629.7	1.0	R130	T112A2	3.3
42	70	620.5	0.6	R110	T112A2	2.3
42	70	641.1	1.4	R150	T100B2	4.5
42	70	631.9	1.0	R130	T100B2	3.3
42	70	622.8	0.6	R110	T100B2	2.3
41	72	741.7	2.6	CB150	T112A2	7.1
41	72	732.2	1.7	CB130	T112A2	5.1
41	72	744.0	2.6	CB150	T100B2	7.1
41	72	734.6	1.7	CB130	T100B2	5.1
39	75	782.2	6.5	CB215	T112A2	13
39	75	772.4	3.6	CB180	T112A2	9.7
39	75	785.0	6.5	CB215	T100B2	13
39	75	775.2	3.6	CB180	T100B2	9.7
39	37	785.2	3.8	CB180	T112A4	10

1.7 - Getriebemotoren

n_2 min^{-1}	ir	T2 Nm	FS'		4.0 kW	Ptn kW
39	37	790.7	3.7	CB180	T100BL4	10
37	80	824.1	5.8	CB215	T112A2	12
37	80	719.8	1.2	R150	T112A2	4.4
37	80	751.0	0.9	CB110	T112A2	3.2
37	80	709.3	0.9	R130	T112A2	3.0
37	80	826.8	5.8	CB215	T100B2	12
37	80	722.1	1.2	R150	T100B2	4.4
37	80	753.5	0.9	CB110	T100B2	3.2
37	80	711.7	0.9	R130	T100B2	3.0
36	40	838.2	2.5	CB150	T112A4	7.1
36	40	795.8	1.8	R150	T112A4	6.0
36	40	827.6	1.7	CB130	T112A4	5.1
36	40	774.6	1.2	R130	T112A4	4.0
36	40	764.1	0.8	R110	T112A4	3.0
36	40	844.2	2.5	CB150	T100BL4	7.1
36	40	801.4	1.7	R150	T100BL4	6.0
36	40	833.4	1.6	CB130	T100BL4	5.1
36	40	780.0	1.2	R130	T100BL4	4.0
36	40	769.4	0.8	R110	T100BL4	3.0
35	28	926.3	3.5	R215	T132M6	16
35	28	849.1	2.6	R180	T132M6	9.0
35	28	816.1	1.8	R150	T132M6	5.7
35	28	827.1	1.1	R130	T132M6	4.3
34	85	842.3	3.2	CB180	T112A2	8.5
34	85	842.2	2.2	CB150	T112A2	6.2
34	85	820.1	1.5	CB130	T112A2	4.3
34	85	845.2	3.2	CB180	T100B2	8.5
34	85	845.2	2.2	CB150	T100B2	6.2
34	85	822.9	1.5	CB130	T100B2	4.3
34	42	880.1	6.0	CB215	T112A4	12
34	42	886.3	6.0	CB215	T100BL4	12
33	43	889.8	0.9	CB110	T112A4	3.8
33	43	895.7	0.9	CB110	T100BL4	3.8
32	30	980.7	5.8	R250	T132M6	23
29	49	922.8	1.4	R150	T112A4	5.5
29	49	909.8	1.0	R130	T112A4	3.6
29	49	897.0	0.6	R110	T112A4	2.7
29	100	860.4	1.0	R150	T112A2	3.9
29	100	834.5	0.7	R130	T112A2	2.7
29	100	863.3	0.9	R150	T100B2	3.9
29	100	837.4	0.7	R130	T100B2	2.7
29	49	929.4	1.4	R150	T100BL4	5.5
29	49	916.4	1.0	R130	T100BL4	3.6
29	49	903.2	0.6	R110	T100BL4	2.7
29	50	1035	2.1	CB150	T112A4	6.7
29	50	1035	1.4	CB130	T112A4	5.1
29	50	1042	2.1	CB150	T100BL4	6.7
29	50	1042	1.4	CB130	T100BL4	5.1
28	51	1055	0.7	CB110	T112A4	3.8
28	51	1063	0.7	CB110	T100BL4	3.8
28	52	1090	3.0	CB180	T112A4	9.7
28	52	1097	3.0	CB180	T100BL4	9.7
27	107	1046	2.8	CB180	T112A2	8.2
27	107	1050	2.8	CB180	T100B2	8.2
27	53	1111	5.1	CB215	T112A4	12
27	53	1119	5.0	CB215	T100BL4	12
27	110	1033	0.7	CB110	T112A2	3.2
27	110	1036	0.7	CB110	T100B2	3.2
26	37	1136	2.9	CB180	T132M6	9.3
26	112	1139	4.7	CB215	T112A2	11
26	112	1143	4.6	CB215	T100B2	11
26	56	1085	1.2	R150	T112A4	5.5
26	56	1025	0.8	R130	T112A4	3.5
26	56	1092	1.2	R150	T100BL4	5.5
26	56	1032	0.8	R130	T100BL4	3.5
25	115	1125	1.8	CB150	T112A2	5.9
25	115	1094	1.2	CB130	T112A2	4.2
25	115	1129	1.8	CB150	T100B2	5.9
25	115	1098	1.2	CB130	T100B2	4.2
25	58	1185	1.9	CB150	T112A4	6.4
25	58	1185	1.2	CB130	T112A4	4.9
25	58	1193	1.9	CB150	T100BL4	6.4
25	58	1193	1.2	CB130	T100BL4	4.9
24	120	1189	6.0	CB250	T112A2	16
24	59	1189	0.7	CB110	T112A4	3.8
24	120	1193	6.0	CB250	T100B2	16
24	40	1213	4.8	R250	T132M6	17
24	40	1213	3.0	R215	T132M6	11
24	40	1150	2.0	R180	T132M6	7.7
24	40	1229	1.9	CB150	T132M6	6.7

1.7 - Motoriduttori

n_2 min^{-1}	ir	T2 Nm	FS'		4.0 kW	Ptn kW
24	40	1150	1.4	R150	T132M6	5.5
24	40	1213	1.3	CB130	T132M6	4.7
24	40	1119	0.9	R130	T132M6	3.7
24	59	1198	0.7	CB110	T100BL4	3.8
24	121	1199	4.1	CB215	T112A2	10
24	121	1203	4.1	CB215	T100B2	10
24	124	1213	2.5	CB180	T112A2	8.2
24	124	1217	2.5	CB180	T100B2	8.2
23	62	1299	6.4	CB250	T112A4	18
23	62	1283	4.6	CB215	T112A4	11
23	62	1283	2.5	CB180	T112A4	9.3
23	42	1290	4.6	CB215	T132M6	11
23	62	1309	6.3	CB250	T100BL4	18
23	62	1292	4.5	CB215	T100BL4	11
23	62	1292	2.5	CB180	T100BL4	9.3
23	129	1194	0.6	CB110	T112A2	3.2
23	129	1198	0.6	CB110	T100B2	3.2
21	69	1391	0.6	CB110	T112A4	3.8
21	69	1401	0.6	CB110	T100BL4	3.8
21	70	1244	1.0	R150	T112A4	4.5
21	70	1244	0.7	R130	T112A4	3.3
20	70	1253	0.9	R150	T100BL4	4.5
20	70	1253	0.6	R130	T100BL4	3.3
20	144	1389	1.6	CB150	T112A2	5.7
20	144	1352	1.0	CB130	T112A2	4.0
20	144	1394	1.6	CB150	T100B2	5.7
20	144	1356	1.0	CB130	T100B2	4.0
20	145	1437	5.3	CB250	T112A2	16
20	145	1442	5.3	CB250	T100B2	16
20	146	1447	3.6	CB215	T112A2	10
20	146	1452	3.6	CB215	T100B2	10
20	72	1471	1.6	CB150	T112A4	6.4
20	72	1452	1.1	CB130	T112A4	4.7
19.9	72	1481	1.6	CB150	T100BL4	6.4
19.9	72	1462	1.1	CB130	T100BL4	4.7
19.8	49	1447	4.0	R250	T132M6	16
19.8	49	1389	1.7	R180	T132M6	7.4
19.8	49	1331	1.1	R150	T132M6	4.8
19.5	150	1447	2.2	CB180	T112A2	7.9
19.5	150	1452	2.2	CB180	T100B2	7.9
19.4	50	1457	2.5	R215	T132M6	9.9
19.4	50	1516	1.6	CB150	T132M6	6.4
19.4	50	1516	1.1	CB130	T132M6	4.5
19.2	75	1552	4.0	CB215	T112A4	11
19.2	75	1532	2.2	CB180	T112A4	8.9
19.1	75	1563	3.9	CB215	T100BL4	11
19.1	75	1543	2.2	CB180	T100BL4	8.9
18.7	52	1598	5.6	CB250	T132M6	17
18.7	52	1598	2.3	CB180	T132M6	9.3
18.5	78	1614	5.5	CB250	T112A4	17
18.3	78	1626	5.4	CB250	T100BL4	17
18.3	53	1607	3.9	CB215	T132M6	11
18.1	162	1415	1.3	CB150	T112A2	4.5
18.1	162	1372	0.8	CB130	T112A2	3.2
18.0	162	1420	1.3	CB150	T100B2	4.5
18.0	162	1378	0.8	CB130	T100B2	3.2
18.0	80	1613	3.6	CB215	T112A4	10
18.0	80	1401	0.8	R150	T112A4	4.4
17.9	80	1624	3.6	CB215	T100BL4	10
17.9	80	1410	0.8	R150	T100BL4	4.4
17.3	56	1566	1.5	R180	T132M6	7.2
17.3	56	1500	1.0	R150	T132M6	4.7
17.0	57	1594	2.2	R215	T132M6	8.8
16.9	85	1669	2.0	CB180	T112A4	7.9
16.9	85	1646	1.4	CB150	T112A4	5.5
16.9	85	1624	0.9	CB130	T112A4	4.0
16.8	174	1429	3.3	CB215	T112A2	6.8
16.8	174	1542	1.8	CB180	T112A2	6.4
16.8	85	1681	2.0	CB180	T100BL4	7.9
16.8	85	1658	1.4	CB150	T100BL4	5.5
16.8	85	1635	0.9	CB130	T100BL4	4.0
16.8	174	1434	3.2	CB215	T100B2	6.8
16.8	174	1548	1.8	CB180	T100B2	6.4
16.7	58	1737	1.4	CB150	T132M6	6.2
16.7	58	1737	0.9	CB130	T132M6	4.3
16.6	177	1708	4.1	CB250	T112A2	15
16.5	177	1713	4.1	CB250	T100B2	15
16.2	60	1748	3.1	R250	T132M6	15
16.0	90	1862	4.9	CB250	T112A4	17
15.9	90	1875	4.9	CB250	T100BL4	17

1.7 - *Gearmotors*

n_2 min^{-1}	ir	T2 Nm	FS'		4.0 kW	Ptn kW
15.7	62	1904	4.9	CB250	T132M6	17
15.7	62	1880	3.5	CB215	T132M6	11
15.7	62	1880	1.9	CB180	T132M6	8.9
14.5	202	1739	1.1	CB150	T112A2	4.4
14.5	202	1686	0.7	CB130	T112A2	3.1
14.5	202	1744	1.1	CB150	T100B2	4.4
14.5	202	1691	0.7	CB130	T100B2	3.1
14.4	100	1644	0.6	R150	T112A4	3.9
14.3	100	1656	0.6	R150	T100BL4	3.9
14.2	207	1836	3.7	CB250	T112A2	12
14.1	207	1841	3.7	CB250	T100B2	12
14.1	69	1929	1.9	R215	T132M6	8.8
13.9	70	1874	2.7	R250	T132M6	12
13.9	70	1819	1.2	R180	T132M6	6.1
13.9	70	1737	0.8	R150	T132M6	4.0
13.8	213	1888	2.3	CB215	T112A2	7.8
13.8	213	1804	1.5	CB180	T112A2	5.8
13.7	213	1895	2.3	CB215	T100B2	7.8
13.7	213	1811	1.5	CB180	T100B2	5.8
13.5	72	2127	1.2	CB150	T132M6	5.9
13.5	72	2127	0.8	CB130	T132M6	4.2
13.5	107	2072	1.7	CB180	T112A4	7.6
13.4	107	2087	1.7	CB180	T100BL4	7.6
13.2	109	2256	4.3	CB250	T112A4	17
13.1	109	2271	4.2	CB250	T100BL4	17
12.9	75	2245	3.0	CB215	T132M6	10
12.9	75	2245	1.7	CB180	T132M6	8.5
12.9	112	2228	2.8	CB215	T112A4	10
12.8	112	2244	2.8	CB215	T100BL4	10
12.7	231	1928	1.0	CB150	T112A2	4.1
12.7	231	1868	0.7	CB130	T112A2	3.0
12.6	231	1934	1.0	CB150	T100B2	4.1
12.6	231	1874	0.7	CB130	T100B2	3.0
12.5	115	2197	1.1	CB150	T112A4	5.3
12.5	115	2166	0.7	CB130	T112A4	3.9
12.4	78	2364	4.2	CB250	T132M6	16
12.4	115	2213	1.1	CB150	T100BL4	5.3
12.4	115	2182	0.7	CB130	T100BL4	3.9
12.3	79	2084	2.2	R250	T132M6	12
12.2	240	2096	3.4	CB250	T112A2	11
12.2	240	2103	3.4	CB250	T100B2	11
12.1	80	2364	2.7	CB215	T132M6	10
12.1	80	2017	1.6	R215	T132M6	7.1
12.1	80	2049	1.0	R180	T132M6	5.9
12.1	80	1954	0.7	R150	T132M6	3.9
12.0	120	2356	3.7	CB250	T112A4	15
11.9	120	2371	3.7	CB250	T100BL4	15
11.9	121	2375	2.5	CB215	T112A4	9.6
11.8	121	2392	2.5	CB215	T100BL4	9.6
11.8	248	2167	2.1	CB215	T112A2	7.6
11.8	248	2070	1.4	CB180	T112A2	5.7
11.8	248	2175	2.1	CB215	T100B2	7.6
11.8	248	2077	1.4	CB180	T100B2	5.7
11.6	124	2369	1.5	CB180	T112A4	7.3
11.5	124	2386	1.5	CB180	T100BL4	7.3
11.4	85	2411	1.5	CB180	T132M6	7.3
11.4	85	2410	1.1	CB150	T132M6	5.3
11.4	85	2344	0.7	CB130	T132M6	3.5
11.2	261	2143	1.3	CB180	T112A2	5.5
11.2	261	2151	1.3	CB180	T100B2	5.5
11.0	267	2264	1.9	CB215	T112A2	7.2
10.9	267	2270	1.9	CB215	T100B2	7.2
10.8	90	2729	3.7	CB250	T132M6	16
10.6	136	2417	2.5	110/215	T112A4	6.0
10.5	136	2435	2.5	110/215	T100BL4	6.0
10.3	140	2413	3.7	130/250	T112A4	9.1
10.3	140	2413	1.6	110/180	T112A4	6.0
10.3	140	2413	1.6	85/180	T112A4	3.4
10.3	140	2487	1.5	130/180	T112A4	9.1
10.3	140	2376	1.1	85/150	T112A4	3.4
10.3	140	2413	1.1	110/150	T112A4	6.0
10.3	140	2302	0.7	85/130	T112A4	3.4
10.3	140	2302	0.7	70/130	T112A4	2.5
10.2	140	2432	3.7	130/250	T100BL4	9.1
10.2	140	2432	1.5	110/180	T100BL4	6.0
10.2	140	2432	1.5	85/180	T100BL4	3.4
10.2	140	2507	1.5	130/180	T100BL4	9.1
10.2	140	2394	1.1	85/150	T100BL4	3.4
10.2	140	2432	1.1	110/150	T100BL4	6.0
10.2	140	2320	0.7	70/130	T100BL4	2.5

1.7 - Getriebemotoren

n_2 min^{-1}	ir	T2 Nm	FS'		4.0 kW	Ptn kW
10.2	140	2320	0.7	85/130	T100BL4	3.4
10.2	288	2329	0.9	CB150	T112A2	3.9
10.1	288	2336	0.9	CB150	T100B2	3.9
10.1	290	2459	2.9	CB250	T112A2	11
10.1	290	2466	2.9	CB250	T100B2	11
10.0	144	2712	1.0	CB150	T112A4	5.1
10.0	144	2674	0.6	CB130	T112A4	3.7
9.9	145	2847	3.2	CB250	T112A4	15
9.9	144	2731	0.9	CB150	T100BL4	5.1
9.9	144	2693	0.6	CB130	T100BL4	3.7
9.9	98	2585	1.7	R250	T132M6	12
9.9	145	2867	3.2	CB250	T100BL4	15
9.9	146	2828	2.2	CB215	T112A4	9.3
9.8	146	2849	2.2	CB215	T100BL4	9.3
9.8	300	2581	1.8	CB215	T112A2	7.4
9.7	300	2591	1.8	CB215	T100B2	7.4
9.7	100	2520	1.2	R215	T132M6	7.1
9.7	100	2403	0.8	R180	T132M6	5.3
9.6	304	2457	1.2	CB180	T112A2	5.4
9.6	304	2464	1.2	CB180	T100B2	5.4
9.6	150	2865	1.3	CB180	T112A4	7.3
9.5	150	2886	1.3	CB180	T100BL4	7.3
9.1	107	2990	1.3	CB180	T132M6	7.0
9.1	323	2569	0.7	CB150	T112A2	3.8
9.0	323	2577	0.7	CB150	T100B2	3.8
8.9	109	3305	3.2	CB250	T132M6	16
8.9	162	2707	0.8	CB150	T112A4	4.0
8.8	162	2726	0.8	CB150	T100BL4	4.0
8.7	112	3264	2.2	CB215	T132M6	9.6
8.4	115	3172	0.9	CB150	T132M6	4.9
8.3	174	2906	1.9	CB215	T112A4	6.8
8.3	174	2999	1.1	CB180	T112A4	5.8
8.2	174	2928	1.9	CB215	T100BL4	6.8
8.2	174	3021	1.1	CB180	T100BL4	5.8
8.1	360	3004	2.5	CB250	T112A2	11
8.1	177	3379	2.5	CB250	T112A4	14
8.1	360	3015	2.5	CB250	T100B2	11
8.1	120	3451	2.8	CB250	T132M6	14
8.1	177	3404	2.5	CB250	T100BL4	14
8.0	121	3429	1.9	CB215	T132M6	8.9
8.0	368	2927	1.1	CB180	T112A2	5.2
7.9	368	2938	1.1	CB180	T100B2	5.2
7.8	124	3469	1.2	CB180	T132M6	7.0
7.8	375	3082	1.5	CB215	T112A2	6.8
7.8	375	3090	1.5	CB215	T100B2	6.8
7.4	195	3365	2.0	110/215	T112A4	5.6
7.3	195	3387	2.0	110/215	T100BL4	5.6
7.3	403	3153	0.6	CB150	T112A2	3.7
7.3	403	3161	0.6	CB150	T100B2	3.7
7.2	200	3183	3.1	130/250	T112A4	8.4
7.2	200	3289	1.2	85/180	T112A4	3.2
7.2	200	3342	1.2	110/180	T112A4	5.6
7.2	200	3396	1.2	130/180	T112A4	8.4
7.2	200	3237	0.9	85/150	T112A4	3.2
7.2	200	3289	0.9	110/150	T112A4	5.6
7.2	200	3206	3.0	130/250	T100BL4	8.4
7.2	200	3312	1.2	85/180	T100BL4	3.2
7.2	200	3366	1.2	110/180	T100BL4	5.6
7.2	200	3420	1.2	130/180	T100BL4	8.4
7.2	200	3259	0.9	85/150	T100BL4	3.2
7.2	200	3312	0.9	110/150	T100BL4	5.6
7.1	202	3322	0.7	CB150	T112A4	3.9
7.1	202	3346	0.7	CB150	T100BL4	3.9
7.0	420	3338	0.9	CB180	T112A2	5.2
7.0	207	3568	2.3	CB250	T112A4	11
7.0	420	3353	0.9	CB180	T100B2	5.2
6.9	207	3593	2.3	CB250	T100BL4	11
6.9	428	3402	1.3	CB215	T112A2	6.4
6.8	428	3417	1.3	CB215	T100B2	6.4
6.8	213	3616	1.4	CB215	T112A4	7.0
6.8	213	3447	1.0	CB180	T112A4	5.2
6.8	434	3226	0.8	CB180	T112A2	4.7
6.7	435	3571	1.9	CB250	T112A2	10
6.7	144	3968	0.7	CB150	T132M6	4.9
6.7	434	3236	0.8	CB180	T100B2	4.7
6.7	435	3586	1.9	CB250	T100B2	10
6.7	213	3643	1.4	CB215	T100BL4	7.0
6.7	213	3472	1.0	CB180	T100BL4	5.2
6.7	145	4111	2.4	CB250	T132M6	14
6.6	146	4085	1.7	CB215	T132M6	8.6

1.7 - Motoriduttori

n_2 min^{-1}	ir	T2 Nm	FS'		4.0 kW	Ptn kW
6.5	150	4133	1.0	CB180	T132M6	6.8
6.2	231	3679	0.6	CB150	T112A4	3.7
6.2	231	3703	0.6	CB150	T100BL4	3.7
6.0	240	4075	2.1	CB250	T112A4	11
6.0	162	3890	0.6	CB150	T132M6	3.8
6.0	240	4102	2.1	CB250	T100BL4	11
5.8	248	4143	1.3	CB215	T112A4	6.8
5.8	248	3945	0.9	CB180	T112A4	5.1
5.8	508	3774	1.4	CB250	T112A2	8.8
5.8	248	4171	1.3	CB215	T100BL4	6.8
5.8	248	3972	0.9	CB180	T100BL4	5.1
5.8	508	3787	1.4	CB250	T100B2	8.8
5.7	518	4049	1.1	CB215	T112A2	6.3
5.6	518	4064	1.1	CB215	T100B2	6.3
5.6	525	3834	0.7	CB180	T112A2	4.6
5.6	174	4321	1.4	CB215	T132M6	6.8
5.6	174	4321	0.8	CB180	T132M6	5.5
5.6	525	3847	0.7	CB180	T100B2	4.6
5.5	261	4083	0.8	CB180	T112A4	5.0
5.5	177	4880	1.9	CB250	T132M6	13
5.5	261	4113	0.8	CB180	T100BL4	5.0
5.4	267	4323	1.2	CB215	T112A4	6.4
5.4	267	4347	1.2	CB215	T100BL4	6.4
5.1	280	4087	0.9	85/180	T112A4	3.2
5.1	280	4087	0.9	110/180	T112A4	5.6
5.1	280	4236	0.9	130/180	T112A4	8.4
5.1	280	3939	0.6	85/150	T112A4	3.2
5.1	280	4013	0.6	110/150	T112A4	5.6
5.1	573	4111	1.4	CB250	T112A2	8.4
5.1	280	4111	0.9	85/180	T100BL4	3.2
5.1	280	4111	0.9	110/180	T100BL4	5.6
5.1	280	4261	0.9	130/180	T100BL4	8.4
5.1	280	3962	0.6	85/150	T100BL4	3.2
5.1	280	4037	0.6	110/150	T100BL4	5.6
5.1	573	4120	1.4	CB250	T100B2	8.4
5.0	290	4766	1.8	CB250	T112A4	11
4.9	290	4804	1.8	CB250	T100BL4	11
4.9	293	4746	1.5	110/215	T112A4	5.6
4.9	293	4775	1.5	110/215	T100BL4	5.6
4.9	600	4148	1.0	CB215	T112A2	5.3
4.9	600	4227	0.6	CB180	T112A2	4.4
4.9	600	4157	1.0	CB215	T100B2	5.3
4.9	600	4235	0.6	CB180	T100B2	4.4
4.8	300	4854	2.2	130/250	T112A4	8.4
4.8	300	4934	1.1	CB215	T112A4	6.6
4.8	300	4885	2.2	130/250	T100BL4	8.4
4.8	300	4965	1.1	CB215	T100BL4	6.6
4.7	304	4674	0.8	CB180	T112A4	4.9
4.7	304	4715	0.7	CB180	T100BL4	4.9
4.7	207	5131	1.8	CB250	T132M6	10
4.6	213	5205	1.1	CB215	T132M6	6.6
4.6	213	4953	0.7	CB180	T132M6	5.0
4.1	710	5087	1.1	CB250	T112A2	8.4
4.1	710	5112	1.1	CB250	T100B2	8.4
4.0	240	5957	1.6	CB250	T132M6	10
4.0	360	5826	1.5	CB250	T112A4	9.7
4.0	360	5870	1.5	CB250	T100BL4	9.7
3.9	248	5960	1.0	CB215	T132M6	6.4
3.9	750	5178	0.8	CB215	T112A2	5.3
3.9	248	5667	0.7	CB180	T132M6	4.9
3.9	368	5569	0.7	CB180	T112A4	4.7
3.9	750	5205	0.8	CB215	T100B2	5.3
3.9	368	5597	0.7	CB180	T100BL4	4.7
3.8	375	5869	0.9	CB215	T112A4	6.1
3.8	375	5916	0.9	CB215	T100BL4	6.1
3.7	261	5854	0.6	CB180	T132M6	4.7
3.7	390	6211	1.2	110/215	T112A4	4.4
3.7	390	6245	1.2	110/215	T100BL4	4.4
3.6	267	6104	0.9	CB215	T132M6	6.0
3.6	400	5624	1.9	130/250	T112A4	6.4
3.6	400	6154	0.7	110/180	T112A4	4.4
3.6	400	5942	0.7	85/180	T112A4	2.4
3.6	400	6261	0.7	130/180	T112A4	6.4
3.6	400	5655	1.9	130/250	T100BL4	6.4
3.6	400	6189	0.7	110/180	T100BL4	4.4
3.6	400	5976	0.7	85/180	T100BL4	2.4
3.6	400	6295	0.7	130/180	T100BL4	6.4
3.4	428	6480	0.8	CB215	T112A4	5.8
3.3	290	6862	1.4	CB250	T132M6	10
3.3	428	6520	0.8	CB215	T100BL4	5.8

1.7 - *Gearmotors*

n_2 min^{-1}	ir	T2 Nm	FS'		4.0 kW	Ptn kW
3.3	435	6809	1.2	CB250	T112A4	9.2
3.3	435	6851	1.2	CB250	T100BL4	9.2
3.2	300	7095	0.9	CB215	T132M6	6.3
2.8	508	7153	0.9	CB250	T112A4	8.1
2.8	508	7205	0.9	CB250	T100BL4	8.1
2.8	518	7696	0.7	CB215	T112A4	5.7
2.8	518	7750	0.7	CB215	T100BL4	5.7
2.7	360	8379	1.2	CB250	T132M6	9.2
2.6	375	8408	0.7	CB215	T132M6	5.8
2.5	573	7762	0.9	CB250	T112A4	7.7
2.5	573	7794	0.9	CB250	T100BL4	7.7
2.4	600	7322	1.4	130/250	T112A4	6.8
2.4	600	8118	0.8	110/215	T112A4	4.6
2.4	600	7799	0.6	CB215	T112A4	4.9
2.4	600	7383	1.4	130/250	T100BL4	6.8
2.4	600	8186	0.8	110/215	T100BL4	4.6
2.4	600	7866	0.6	CB215	T100BL4	4.9
2.3	428	9086	0.6	CB215	T132M6	5.4
2.2	435	9764	0.9	CB250	T132M6	8.8
2.0	710	9597	0.7	CB250	T112A4	7.7
2.0	710	9692	0.7	CB250	T100BL4	7.7
1.9	508	10201	0.7	CB250	T132M6	7.7
1.7	573	11076	0.7	CB250	T132M6	7.4
1.5	980	12474	0.8	130/250	T112A4	3.6
1.5	980	12560	0.8	130/250	T100BL4	3.6
1.0	1446	15660	0.7	130/250	T112A4	3.6
0.99	1446	15819	0.7	130/250	T100BL4	3.6

1.7 - Getriebemotoren

n_2 min^{-1}	ir	T2 Nm	FS'		5.5 kW	Ptn kW
419	7	110.4	4.5	R130	T132S2	9.1
419	7	107.9	3.2	R110	T132S2	6.0
417	7	110.8	4.5	R130	T112B2	9.1
417	7	108.3	3.1	R110	T112B2	6.0
417	7	108.3	1.6	R85	T112B2	3.4
417	7	108.3	0.9	R70	T112B2	2.5
293	10	156.0	5.5	R150	T132S2	11
293	10	156.0	3.7	R130	T132S2	8.4
293	10	152.4	2.6	R110	T132S2	5.6
292	10	156.5	5.4	R150	T112B2	11
292	10	156.5	3.7	R130	T112B2	8.4
292	10	152.9	2.6	R110	T112B2	5.6
292	10	152.9	1.3	R85	T112B2	3.2
292	10	151.1	0.7	R70	T112B2	2.2
209	7	221.6	4.8	R150	T132S4	12
209	7	221.6	3.2	R130	T132S4	9.1
209	7	216.6	2.2	R110	T132S4	6.0
206	7	224.7	4.8	R150	T112BL4	12
206	7	224.7	3.1	R130	T112BL4	9.1
206	7	219.6	2.2	R110	T112BL4	6.0
206	7	217.0	1.1	R85	T112BL4	3.4
206	7	217.0	0.6	R70	T112BL4	2.5
195	15	231.3	5.7	R180	T132S2	15
195	15	228.6	4.1	R150	T132S2	9.9
195	15	225.9	2.8	R130	T132S2	6.8
195	15	223.2	1.8	R110	T132S2	4.6
195	15	229.3	4.1	R150	T112B2	9.9
195	15	226.6	2.7	R130	T112B2	6.8
195	15	223.9	1.8	R110	T112B2	4.6
195	15	221.3	1.0	R85	T112B2	2.7
147	20	301.2	5.0	R180	T132S2	13
147	20	301.2	3.6	R150	T132S2	9.3
147	20	297.6	2.3	R130	T132S2	6.4
146	10	316.6	5.2	R180	T132S4	17
146	10	313.0	3.8	R150	T132S4	11
146	20	302.2	3.5	R150	T112B2	9.3
146	10	313.0	2.5	R130	T132S4	8.4
146	20	298.6	2.3	R130	T112B2	6.4
146	10	305.8	1.8	R110	T132S4	5.6
146	20	295.0	1.6	R110	T112B2	4.4
146	20	291.4	0.8	R85	T112B2	2.4
144	10	317.3	3.7	R150	T112BL4	11
144	10	317.3	2.5	R130	T112BL4	8.4
144	10	310.0	1.7	R110	T112BL4	5.6
144	10	306.4	0.9	R85	T112BL4	3.2
139	7	333.6	5.5	R180	T132ML6	17
139	7	329.8	3.9	R150	T132ML6	11
139	7	329.8	2.6	R130	T132ML6	8.4
139	7	322.2	1.8	R110	T132ML6	5.6
105	28	431.7	5.6	R215	T132S2	18
105	28	401.6	3.5	R180	T132S2	9.9
105	28	386.5	2.5	R150	T132S2	6.2
105	28	381.5	1.6	R130	T132S2	4.5
104	28	387.8	2.5	R150	T112B2	6.2
104	28	382.8	1.6	R130	T112B2	4.5
104	28	387.8	1.1	R110	T112B2	3.3
97	15	464.1	3.9	R180	T132S4	15
97	15	458.7	2.8	R150	T132S4	9.9
97	15	453.3	1.9	R130	T132S4	6.8
97	15	442.5	1.2	R110	T132S4	4.6
97	10	471.1	4.2	R180	T132ML6	16
97	10	465.7	3.0	R150	T132ML6	11
97	10	460.3	2.1	R130	T132ML6	7.2
97	10	454.8	1.4	R110	T132ML6	5.2
96	15	465.1	2.7	R150	T112BL4	9.9
96	15	459.6	1.8	R130	T112BL4	6.8
96	15	448.6	1.2	R110	T112BL4	4.6
96	15	443.2	0.6	R85	T112BL4	2.7
79	37	537.3	4.4	CB180	T132S2	11
79	37	539.1	4.4	CB180	T112B2	11
73	40	580.8	4.1	R215	T132S2	13
73	40	580.8	2.9	CB150	T132S2	7.8
73	40	537.8	2.8	R180	T132S2	8.3
73	40	545.0	2.0	R150	T132S2	6.0
73	40	573.7	1.9	CB130	T132S2	5.6
73	40	530.6	1.3	R130	T132S2	4.0
73	20	618.8	5.3	R215	T132S4	18
73	20	604.4	3.4	R180	T132S4	13
73	40	582.8	2.9	CB150	T112B2	7.8
73	20	604.4	2.4	R150	T132S4	9.3

1.7 - Motoriduttori

n_2 min^{-1}	ir	T2 Nm	FS'		5.5 kW	Ptn kW
73	40	546.8	2.0	R150	T112B2	6.0
73	40	575.6	1.9	CB130	T112B2	5.6
73	20	597.2	1.5	R130	T132S4	6.4
73	40	532.5	1.3	R130	T112B2	4.0
73	40	532.4	0.9	R110	T112B2	3.0
72	20	612.8	2.3	R150	T112BL4	9.3
72	20	605.5	1.5	R130	T112BL4	6.4
72	20	590.9	1.0	R110	T112BL4	4.4
68	43	618.7	1.0	CB110	T112B2	4.2
65	15	706.6	5.5	R215	T132ML6	20
65	15	690.4	3.1	R180	T132ML6	14
65	15	674.1	2.2	R150	T132ML6	8.8
65	15	674.1	1.5	R130	T132ML6	6.4
65	15	649.7	1.0	R110	T132ML6	4.2
60	49	685.1	5.5	R250	T132S2	18
60	49	650.0	2.5	R180	T132S2	8.0
60	49	650.0	1.6	R150	T132S2	5.5
60	49	652.2	1.6	R150	T112B2	5.5
60	49	634.6	1.1	R130	T112B2	3.6
60	49	634.7	0.7	R110	T112B2	2.7
59	50	699.2	3.4	R215	T132S2	12
59	50	717.1	2.5	CB150	T132S2	7.4
59	50	708.1	1.7	CB130	T132S2	5.3
58	50	719.5	2.5	CB150	T112B2	7.4
58	50	710.6	1.7	CB130	T112B2	5.3
57	51	734.0	0.9	CB110	T112B2	4.2
56	52	755.0	3.5	CB180	T132S2	11
56	52	757.7	3.5	CB180	T112B2	11
55	53	769.6	5.9	CB215	T132S2	13
55	53	772.3	5.9	CB215	T112B2	13
52	56	742.9	2.2	R180	T132S2	7.7
52	56	742.9	1.4	R150	T132S2	5.5
52	28	856.3	3.7	R215	T132S4	17
52	28	795.8	2.4	R180	T132S4	9.9
52	28	765.6	1.7	R150	T132S4	6.2
52	56	745.4	1.4	R150	T112B2	5.5
52	28	765.6	1.1	R130	T132S4	4.5
52	56	725.3	0.9	R130	T112B2	3.5
51	28	776.2	1.6	R150	T112BL4	6.2
51	28	776.2	1.0	R130	T112BL4	4.5
51	28	765.9	0.7	R110	T112BL4	3.3
51	57	776.6	2.9	R215	T132S2	11
51	58	821.4	2.2	CB150	T132S2	7.1
51	58	821.3	1.5	CB130	T132S2	5.3
50	58	824.3	2.2	CB150	T112B2	7.1
50	58	824.3	1.5	CB130	T112B2	5.3
49	59	849.1	0.8	CB110	T112B2	4.2
49	60	828.3	4.3	R250	T132S2	17
49	30	906.5	5.3	R250	T132S4	25
49	20	920.5	6.2	R250	T132ML6	26
49	20	920.5	4.2	R215	T132ML6	17
49	20	898.9	2.7	R180	T132ML6	12
49	20	888.0	1.9	R150	T132ML6	8.3
49	20	888.1	1.2	R130	T132ML6	6.0
47	62	889.1	5.4	CB215	T132S2	13
47	62	889.1	2.9	CB180	T132S2	10
47	62	892.1	5.4	CB215	T112B2	13
47	62	892.1	2.9	CB180	T112B2	10
42	69	940.2	2.6	R215	T132S2	11
42	69	980.5	0.7	CB110	T112B2	4.2
42	70	903.4	3.8	R250	T132S2	14
42	70	903.5	1.6	R180	T132S2	6.5
42	70	878.3	1.1	R150	T132S2	4.5
42	70	881.5	1.1	R150	T112B2	4.5
42	70	868.9	0.7	R130	T112B2	3.3
41	72	1020	1.9	CB150	T132S2	7.1
41	72	1007	1.3	CB130	T132S2	5.1
41	72	1023	1.9	CB150	T112B2	7.1
41	72	1010	1.3	CB130	T112B2	5.1
39	37	1065	2.8	CB180	T132S4	10
39	75	1076	4.7	CB215	T132S2	13
39	75	1062	2.6	CB180	T132S2	9.7
39	75	1079	4.7	CB215	T112B2	13
39	75	1066	2.6	CB180	T112B2	9.7
39	37	1080	2.7	CB180	T112BL4	10
38	38	1094	6.4	CB250	T132S4	19
38	38	1109	6.4	CB250	T112BL4	19
38	78	1119	6.5	CB250	T132S2	19
37	78	1122	6.4	CB250	T112B2	19
37	79	991	3.0	R250	T132S2	13

1.7 - *Gearmotors*

n_2 min^{-1}	ir	T2 Nm	FS'		5.5 kW	Ptn kW
37	80	1133	4.2	CB215	T132S2	12
37	80	1004	2.2	R215	T132S2	8.5
37	80	990	1.4	R180	T132S2	6.3
37	80	990	0.9	R150	T132S2	4.4
37	40	1137	4.4	R250	T132S4	19
37	80	1137	4.2	CB215	T112B2	12
37	40	1137	2.7	R215	T132S4	12
37	40	1079	1.9	R180	T132S4	8.3
37	40	1137	1.8	CB150	T132S4	7.1
37	40	1079	1.3	R150	T132S4	6.0
37	40	1122	1.2	CB130	T132S4	5.1
37	80	993	0.9	R150	T112B2	4.4
37	40	1050	0.9	R130	T132S4	4.0
37	80	1036	0.6	CB110	T112B2	3.2
37	80	979	0.6	R130	T112B2	3.0
36	40	1153	1.8	CB150	T112BL4	7.1
36	40	1094	1.3	R150	T112BL4	6.0
36	40	1138	1.2	CB130	T112BL4	5.1
36	40	1065	0.8	R130	T112BL4	4.0
36	40	1051	0.6	R110	T112BL4	3.0
35	42	1194	4.4	CB215	T132S4	12
35	28	1274	2.5	R215	T132ML6	16
35	28	1168	1.9	R180	T132ML6	9.0
35	28	1122	1.3	R150	T132ML6	5.7
35	28	1137	0.8	R130	T132ML6	4.3
34	85	1158	2.3	CB180	T132S2	8.5
34	85	1158	1.6	CB150	T132S2	6.2
34	85	1128	1.1	CB130	T132S2	4.3
34	85	1162	2.3	CB180	T112B2	8.5
34	85	1162	1.6	CB150	T112B2	6.2
34	85	1132	1.1	CB130	T112B2	4.3
34	42	1210	4.4	CB215	T112BL4	12
33	43	1224	0.6	CB110	T112BL4	3.8
33	90	1291	5.9	CB250	T132S2	19
32	90	1295	5.8	CB250	T112B2	19
32	30	1348	4.2	R250	T132ML6	23
30	98	1230	2.4	R250	T132S2	13
30	49	1357	3.7	R250	T132S4	17
30	49	1304	1.6	R180	T132S4	8.0
30	49	1252	1.1	R150	T132S4	5.5
29	49	1269	1.0	R150	T112BL4	5.5
29	49	1251	0.7	R130	T112BL4	3.6
29	100	1255	1.7	R215	T132S2	8.5
29	100	1165	1.1	R180	T132S2	5.6
29	100	1183	0.7	R150	T132S2	3.9
29	50	1367	2.3	R215	T132S4	11
29	50	1403	1.6	CB150	T132S4	6.7
29	50	1403	1.0	CB130	T132S4	5.1
29	100	1187	0.7	R150	T112B2	3.9
29	50	1423	1.6	CB150	T112BL4	6.7
29	50	1423	1.0	CB130	T112BL4	5.1
28	52	1478	5.4	CB250	T132S4	18
28	52	1478	2.2	CB180	T132S4	9.7
28	52	1499	5.3	CB250	T112BL4	18
28	52	1499	2.2	CB180	T112BL4	9.7
28	53	1506	3.7	CB215	T132S4	12
27	107	1439	2.0	CB180	T132S2	8.2
27	107	1444	2.0	CB180	T112B2	8.2
27	53	1527	3.7	CB215	T112BL4	12
27	109	1544	5.2	CB250	T132S2	18
27	109	1549	5.2	CB250	T112B2	18
26	37	1563	2.1	CB180	T132ML6	9.3
26	112	1566	3.4	CB215	T132S2	11
26	112	1572	3.4	CB215	T112B2	11
26	56	1471	1.4	R180	T132S4	7.7
26	56	1471	0.9	R150	T132S4	5.5
26	56	1492	0.9	R150	T112BL4	5.5
26	57	1518	2.0	R215	T132S4	9.9
26	38	1625	4.9	CB250	T132ML6	18
25	115	1546	1.3	CB150	T132S2	5.9
25	115	1505	0.9	CB130	T132S2	4.2
25	115	1552	1.3	CB150	T112B2	5.9
25	115	1510	0.9	CB130	T112B2	4.2
25	58	1607	1.4	CB150	T132S4	6.4
25	58	1607	0.9	CB130	T132S4	4.9
25	58	1629	1.4	CB150	T112BL4	6.4
25	58	1629	0.9	CB130	T112BL4	4.9
24	120	1635	4.4	CB250	T132S2	16
24	120	1641	4.4	CB250	T112B2	16
24	60	1641	2.9	R250	T132S4	17

1.7 - Getriebemotoren

n_2 min^{-1}	ir	T2 Nm	FS'		5.5 kW	Ptn kW
24	40	1668	3.5	R250	T132ML6	17
24	40	1668	2.2	R215	T132ML6	11
24	40	1581	1.5	R180	T132ML6	7.7
24	40	1689	1.4	CB150	T132ML6	6.7
24	40	1581	1.0	R150	T132ML6	5.5
24	40	1668	0.9	CB130	T132ML6	4.7
24	40	1538	0.7	R130	T132ML6	3.7
24	121	1649	3.0	CB215	T132S2	10
24	121	1654	3.0	CB215	T112B2	10
24	124	1667	1.8	CB180	T132S2	8.2
24	62	1762	4.7	CB250	T132S4	18
24	62	1740	3.4	CB215	T132S4	11
24	62	1740	1.8	CB180	T132S4	9.3
24	124	1673	1.8	CB180	T112B2	8.2
23	62	1786	4.6	CB250	T112BL4	18
23	62	1764	3.3	CB215	T112BL4	11
23	62	1764	1.8	CB180	T112BL4	9.3
23	42	1774	3.4	CB215	T132ML6	11
21	69	1837	1.7	R215	T132S4	9.9
21	70	1788	2.5	R250	T132S4	14
21	70	1712	1.1	R180	T132S4	6.5
21	70	1687	0.7	R150	T132S4	4.5
21	70	1711	0.7	R150	T112BL4	4.5
20	144	1910	1.1	CB150	T132S2	5.7
20	144	1858	0.7	CB130	T132S2	4.0
20	72	1994	1.2	CB150	T132S4	6.4
20	144	1917	1.1	CB150	T112B2	5.7
20	72	1969	0.8	CB130	T132S4	4.7
20	144	1865	0.7	CB130	T112B2	4.0
20	145	1975	3.8	CB250	T132S2	16
20	145	1982	3.8	CB250	T112B2	16
20	146	1989	2.6	CB215	T132S2	10
20	146	1996	2.6	CB215	T112B2	10
20	72	2022	1.2	CB150	T112BL4	6.4
20	72	1996	0.8	CB130	T112BL4	4.7
19.8	49	1990	2.9	R250	T132ML6	16
19.8	49	1910	1.3	R180	T132ML6	7.4
19.8	49	1831	0.8	R150	T132ML6	4.8
19.5	150	1990	1.6	CB180	T132S2	7.9
19.5	75	2104	2.9	CB215	T132S4	11
19.5	75	2077	1.6	CB180	T132S4	8.9
19.5	150	1996	1.6	CB180	T112B2	7.9
19.4	50	2004	1.8	R215	T132ML6	9.9
19.4	50	2085	1.2	CB150	T132ML6	6.4
19.4	50	2085	0.8	CB130	T132ML6	4.5
19.2	75	2134	2.9	CB215	T112BL4	11
19.2	75	2107	1.6	CB180	T112BL4	8.9
18.7	78	2189	4.0	CB250	T132S4	17
18.7	52	2197	4.1	CB250	T132ML6	17
18.7	52	2197	1.7	CB180	T132ML6	9.3
18.5	79	1961	2.0	R250	T132S4	13
18.5	78	2219	4.0	CB250	T112BL4	17
18.3	53	2210	2.9	CB215	T132ML6	11
18.3	80	2187	2.7	CB215	T132S4	10
18.3	80	1957	1.4	R215	T132S4	8.0
18.3	80	1928	0.9	R180	T132S4	6.3
18.1	162	1945	1.0	CB150	T132S2	4.5
18.1	162	1887	0.6	CB130	T132S2	3.2
18.0	162	1953	0.9	CB150	T112B2	4.5
18.0	162	1894	0.6	CB130	T112B2	3.2
18.0	80	2218	2.6	CB215	T112BL4	10
17.3	56	2153	1.1	R180	T132ML6	7.2
17.3	56	2062	0.7	R150	T132ML6	4.7
17.2	85	2262	1.5	CB180	T132S4	7.9
17.2	85	2232	1.0	CB150	T132S4	5.5
17.2	85	2202	0.7	CB130	T132S4	4.0
17.0	57	2191	1.6	R215	T132ML6	8.8
16.9	85	2295	1.4	CB180	T112BL4	7.9
16.9	85	2264	1.0	CB150	T112BL4	5.5
16.9	85	2232	0.6	CB130	T112BL4	4.0
16.8	174	1965	2.4	CB215	T132S2	6.8
16.8	174	2121	1.3	CB180	T132S2	6.4
16.8	174	1972	2.4	CB215	T112B2	6.8
16.8	174	2129	1.3	CB180	T112B2	6.4
16.7	58	2388	1.0	CB150	T132ML6	6.2
16.7	58	2388	0.7	CB130	T132ML6	4.3
16.6	177	2349	3.0	CB250	T132S2	15
16.5	177	2356	3.0	CB250	T112B2	15
16.2	90	2526	3.6	CB250	T132S4	17
16.2	60	2404	2.3	R250	T132ML6	15

1.7 - Motoriduttori

n_2 min^{-1}	ir	T2 Nm	FS'		5.5 kW	Ptn kW
16.0	90	2561	3.6	CB250	T112BL4	17
15.7	62	2618	3.6	CB250	T132ML6	17
15.7	62	2584	2.5	CB215	T132ML6	11
15.7	62	2584	1.4	CB180	T132ML6	8.9
14.9	98	2432	1.6	R250	T132S4	13
14.6	100	2447	1.1	R215	T132S4	8.0
14.6	100	2267	0.7	R180	T132S4	5.6
14.5	202	2391	0.8	CB150	T132S2	4.4
14.5	202	2397	0.8	CB150	T112B2	4.4
14.2	207	2524	2.7	CB250	T132S2	12
14.1	207	2531	2.7	CB250	T112B2	12
14.1	69	2652	1.4	R215	T132ML6	8.8
13.9	70	2577	1.9	R250	T132ML6	12
13.9	70	2501	0.9	R180	T132ML6	6.1
13.8	213	2596	1.6	CB215	T132S2	7.8
13.8	213	2481	1.1	CB180	T132S2	5.8
13.7	213	2605	1.6	CB215	T112B2	7.8
13.7	213	2490	1.1	CB180	T112B2	5.8
13.6	107	2811	1.2	CB180	T132S4	7.6
13.5	72	2924	0.9	CB150	T132ML6	5.9
13.5	107	2849	1.2	CB180	T112BL4	7.6
13.4	109	3060	3.1	CB250	T132S4	17
13.2	109	3101	3.1	CB250	T112BL4	17
13.0	112	3021	2.1	CB215	T132S4	10
12.9	75	3087	2.2	CB215	T132ML6	10
12.9	75	3087	1.2	CB180	T132ML6	8.5
12.9	112	3063	2.1	CB215	T112BL4	10
12.7	115	2978	0.8	CB150	T132S4	5.3
12.7	231	2651	0.7	CB150	T132S2	4.1
12.6	231	2659	0.7	CB150	T112B2	4.1
12.5	115	3021	0.8	CB150	T112BL4	5.3
12.4	78	3251	3.0	CB250	T132ML6	16
12.3	79	2866	1.6	R250	T132ML6	12
12.2	240	2882	2.5	CB250	T132S2	11
12.2	120	3194	2.7	CB250	T132S4	15
12.2	240	2892	2.5	CB250	T112B2	11
12.1	80	3250	2.0	CB215	T132ML6	10
12.1	80	2773	1.2	R215	T132ML6	7.1
12.1	80	2817	0.7	R180	T132ML6	5.9
12.1	121	3220	1.8	CB215	T132S4	9.6
12.0	120	3239	2.7	CB250	T112BL4	15
11.9	121	3266	1.8	CB215	T112BL4	9.6
11.8	248	2980	1.5	CB215	T132S2	7.6
11.8	248	2847	1.0	CB180	T132S2	5.7
11.8	248	2990	1.5	CB215	T112B2	7.6
11.8	124	3213	1.1	CB180	T132S4	7.3
11.8	248	2856	1.0	CB180	T112B2	5.7
11.6	124	3258	1.1	CB180	T112BL4	7.3
11.4	85	3315	1.1	CB180	T132ML6	7.3
11.4	85	3314	0.8	CB150	T132ML6	5.3
11.2	261	2947	1.0	CB180	T132S2	5.5
11.2	261	2957	1.0	CB180	T112B2	5.5
11.0	267	3112	1.4	CB215	T132S2	7.2
10.9	267	3121	1.4	CB215	T112B2	7.2
10.8	90	3752	2.7	CB250	T132ML6	16
10.7	136	3277	1.9	110/215	T132S4	6.0
10.6	136	3323	1.8	110/215	T112BL4	6.0
10.4	140	3274	2.8	130/250	T132S4	9.1
10.4	140	3273	1.1	110/180	T132S4	6.0
10.4	140	3374	1.1	130/180	T132S4	9.1
10.4	140	3274	0.8	110/150	T132S4	6.0
10.3	140	3318	2.7	130/250	T112BL4	9.1
10.3	140	3318	1.1	110/180	T112BL4	6.0
10.3	140	3318	1.1	85/180	T112BL4	3.4
10.3	140	3420	1.1	130/180	T112BL4	9.1
10.3	140	3267	0.8	85/150	T112BL4	3.4
10.3	140	3318	0.8	110/150	T112BL4	6.0
10.2	288	3202	0.7	CB150	T132S2	3.9
10.1	144	3678	0.7	CB150	T132S4	5.1
10.1	288	3211	0.7	CB150	T112B2	3.9
10.1	290	3380	2.1	CB250	T132S2	11
10.1	145	3860	2.4	CB250	T132S4	15
10.1	290	3390	2.1	CB250	T112B2	11
10.0	146	3835	1.6	CB215	T132S4	9.3
10.0	144	3730	0.7	CB150	T112BL4	5.1
9.9	145	3914	2.3	CB250	T112BL4	15
9.9	98	3555	1.3	R250	T132ML6	12
9.9	146	3889	1.6	CB215	T112BL4	9.3
9.8	300	3548	1.3	CB215	T132S2	7.4
9.7	300	3563	1.3	CB215	T112B2	7.4

1.7 - *Gearmotors*

n_2 min^{-1}	ir	T2 Nm	FS'		5.5 kW	Ptn kW
9.7	150	3886	1.0	CB180	T132S4	7.3
9.7	100	3465	0.9	R215	T132ML6	7.1
9.6	304	3378	0.9	CB180	T132S2	5.4
9.6	304	3388	0.9	CB180	T112B2	5.4
9.6	150	3939	1.0	CB180	T112BL4	7.3
9.1	107	4111	0.9	CB180	T132ML6	7.0
9.0	162	3672	0.6	CB150	T132S4	4.0
8.9	109	4544	2.3	CB250	T132ML6	16
8.7	112	4488	1.6	CB215	T132ML6	9.6
8.4	115	4361	0.6	CB150	T132ML6	4.9
8.4	174	3944	1.4	CB215	T132S4	6.8
8.4	174	4069	0.8	CB180	T132S4	5.8
8.3	174	3996	1.4	CB215	T112BL4	6.8
8.3	174	4123	0.8	CB180	T112BL4	5.8
8.3	177	4584	1.8	CB250	T132S4	14
8.1	360	4130	1.8	CB250	T132S2	11
8.1	177	4646	1.8	CB250	T112BL4	14
8.1	360	4145	1.8	CB250	T112B2	11
8.1	120	4746	2.0	CB250	T132ML6	14
8.0	121	4715	1.4	CB215	T132ML6	8.9
8.0	368	4025	0.8	CB180	T132S2	5.2
7.9	368	4040	0.8	CB180	T112B2	5.2
7.8	124	4769	0.8	CB180	T132ML6	7.0
7.8	375	4237	1.1	CB215	T132S2	6.8
7.8	375	4248	1.1	CB215	T112B2	6.8
7.5	195	4558	1.5	110/215	T132S4	5.6
7.4	195	4626	1.4	110/215	T112BL4	5.6
7.3	200	4317	2.3	130/250	T132S4	8.4
7.3	200	4533	0.9	110/180	T132S4	5.6
7.3	200	4605	0.9	130/180	T132S4	8.4
7.3	200	4461	0.6	110/150	T132S4	5.6
7.2	200	4377	2.2	130/250	T112BL4	8.4
7.2	200	4523	0.9	85/180	T112BL4	3.2
7.2	200	4596	0.9	110/180	T112BL4	5.6
7.2	200	4669	0.9	130/180	T112BL4	8.4
7.2	200	4451	0.6	85/150	T112BL4	3.2
7.2	200	4523	0.6	110/150	T112BL4	5.6
7.1	207	4843	1.7	CB250	T132S4	11
7.0	420	4590	0.7	CB180	T132S2	5.2
7.0	207	4905	1.7	CB250	T112BL4	11
7.0	420	4610	0.7	CB180	T112B2	5.2
6.9	213	4907	1.0	CB215	T132S4	7.0
6.9	428	4677	0.9	CB215	T132S2	6.4
6.9	213	4677	0.7	CB180	T132S4	5.2
6.8	428	4698	0.9	CB215	T112B2	6.4
6.8	213	4972	1.0	CB215	T112BL4	7.0
6.8	213	4740	0.7	CB180	T112BL4	5.2
6.8	434	4436	0.6	CB180	T132S2	4.7
6.7	435	4910	1.4	CB250	T132S2	10
6.7	435	4931	1.4	CB250	T112B2	10
6.7	145	5653	1.8	CB250	T132ML6	14
6.6	146	5617	1.2	CB215	T132ML6	8.6
6.5	150	5683	0.7	CB180	T132ML6	6.8
6.1	240	5529	1.5	CB250	T132S4	11
6.0	240	5603	1.5	CB250	T112BL4	11
5.9	248	5618	0.9	CB215	T132S4	6.8
5.9	248	5351	0.6	CB180	T132S4	5.1
5.8	248	5696	0.9	CB215	T112BL4	6.8
5.8	248	5425	0.6	CB180	T112BL4	5.1
5.8	508	5189	1.0	CB250	T132S2	8.8
5.8	508	5207	1.0	CB250	T112B2	8.8
5.7	518	5567	0.8	CB215	T132S2	6.3
5.6	518	5587	0.8	CB215	T112B2	6.3
5.6	261	5544	0.6	CB180	T132S4	5.0
5.6	174	5941	1.0	CB215	T132ML6	6.8
5.6	174	5941	0.6	CB180	T132ML6	5.5
5.5	261	5614	0.6	CB180	T112BL4	5.0
5.5	177	6710	1.4	CB250	T132ML6	13
5.5	267	5858	0.9	CB215	T132S4	6.4
5.4	267	5945	0.9	CB215	T112BL4	6.4
5.2	280	5545	0.7	110/180	T132S4	5.6
5.2	280	5747	0.6	130/180	T132S4	8.4
5.1	280	5620	0.7	110/180	T112BL4	5.6
5.1	280	5620	0.7	85/180	T112BL4	3.2
5.1	280	5824	0.6	130/180	T112BL4	8.4
5.1	573	5653	1.0	CB250	T132S2	8.4
5.1	573	5665	1.0	CB250	T112B2	8.4
5.0	290	6474	1.3	CB250	T132S4	11
5.0	293	6433	1.1	110/215	T132S4	5.6
5.0	290	6553	1.3	CB250	T112BL4	11

1.7 - Getriebemotoren

n_2 min^{-1}	ir	T2 Nm	FS'		5.5 kW	Ptn kW
4.9	293	6526	1.1	110/215	T112BL4	5.6
4.9	600	5704	0.7	CB215	T132S2	5.3
4.9	300	6579	1.6	130/250	T132S4	8.4
4.9	300	6687	0.8	CB215	T132S4	6.6
4.9	600	5716	0.7	CB215	T112B2	5.3
4.8	300	6675	1.6	130/250	T112BL4	8.4
4.8	300	6784	0.8	CB215	T112BL4	6.6
4.7	207	7056	1.3	CB250	T132ML6	10
4.6	213	7157	0.8	CB215	T132ML6	6.6
4.1	710	6994	0.8	CB250	T132S2	8.4
4.1	710	7029	0.8	CB250	T112B2	8.4
4.1	360	7891	1.1	CB250	T132S4	9.7
4.0	240	8190	1.1	CB250	T132ML6	10
4.0	360	8010	1.1	CB250	T112BL4	9.7
3.9	248	8194	0.7	CB215	T132ML6	6.4
3.9	375	7967	0.7	CB215	T132S4	6.1
3.8	375	8069	0.7	CB215	T112BL4	6.1
3.7	390	8540	0.8	110/215	T112BL4	4.4
3.7	400	7627	1.4	130/250	T132S4	6.4
3.6	267	8393	0.7	CB215	T132ML6	6.0
3.6	400	7733	1.4	130/250	T112BL4	6.4
3.4	435	9223	0.9	CB250	T132S4	9.2
3.3	290	9435	1.0	CB250	T132ML6	10
3.3	435	9363	0.9	CB250	T112BL4	9.2
3.2	300	9756	0.6	CB215	T132ML6	6.3
2.9	508	9701	0.6	CB250	T132S4	8.1
2.8	508	9836	0.6	CB250	T112BL4	8.1
2.7	360	11520	0.8	CB250	T132ML6	9.2
2.6	573	10504	0.6	CB250	T132S4	7.7
2.5	573	10672	0.6	CB250	T112BL4	7.7
2.4	600	9942	1.0	130/250	T132S4	6.8
2.4	600	10068	1.0	130/250	T112BL4	6.8
2.2	435	13426	0.7	CB250	T132ML6	8.8
1.5	980	17152	0.6	130/250	T112BL4	3.6

1.7 - Motoriduttori

n_2 min^{-1}	ir	T2 Nm	FS'		7.5 kW	Ptn kW
419	7	150.6	5.0	R150	T112BL2	12
419	7	150.6	3.3	R130	T112BL2	9.1
419	7	147.2	2.3	R110	T112BL2	6.0
419	7	147.2	1.2	R85	T112BL2	3.4
419	7	147.1	0.6	R70	T112BL2	2.5
417	7	151.1	5.0	R150	T132SL2	12
417	7	151.1	3.3	R130	T132SL2	9.1
417	7	147.7	2.3	R110	T132SL2	6.0
293	10	212.7	4.0	R150	T112BL2	11
293	10	212.7	2.7	R130	T112BL2	8.4
293	10	207.8	1.9	R110	T112BL2	5.6
293	10	207.8	1.0	R85	T112BL2	3.2
292	10	215.9	5.5	R180	T132SL2	17
292	10	213.4	4.0	R150	T132SL2	11
292	10	213.4	2.7	R130	T132SL2	8.4
292	10	208.5	1.9	R110	T132SL2	5.6
209	7	305.6	4.9	R180	T132M4	19
209	7	302.2	3.5	R150	T132M4	12
209	7	302.2	2.3	R130	T132M4	9.1
209	7	295.3	1.6	R110	T132M4	6.0
195	15	311.7	3.0	R150	T112BL2	9.9
195	15	308.0	2.0	R130	T112BL2	6.8
195	15	304.4	1.3	R110	T112BL2	4.6
195	15	300.7	0.7	R85	T112BL2	2.7
195	15	316.4	4.2	R180	T132SL2	15
195	15	312.7	3.0	R150	T132SL2	9.9
195	15	309.1	2.0	R130	T132SL2	6.8
195	15	305.4	1.3	R110	T132SL2	4.6
147	20	410.7	2.6	R150	T112BL2	9.3
147	20	405.8	1.7	R130	T112BL2	6.4
147	20	400.9	1.2	R110	T112BL2	4.4
146	20	426.8	5.9	R215	T132SL2	20
146	10	431.7	3.8	R180	T132M4	17
146	20	412.1	3.7	R180	T132SL2	13
146	10	426.8	2.8	R150	T132M4	11
146	20	412.1	2.6	R150	T132SL2	9.3
146	10	426.8	1.9	R130	T132M4	8.4
146	20	407.2	1.7	R130	T132SL2	6.4
146	10	417.0	1.3	R110	T132M4	5.6
137	7	464.8	6.2	R215	T160M6	23
137	7	459.6	4.0	R180	T160M6	17
137	7	454.4	2.9	R150	T160M6	11
105	28	527.1	1.8	R150	T112BL2	6.2
105	28	520.2	1.2	R130	T112BL2	4.5
105	28	527.0	0.8	R110	T112BL2	3.3
104	28	590.6	4.1	R215	T132SL2	18
104	28	549.4	2.5	R180	T132SL2	9.9
104	28	528.8	1.8	R150	T132SL2	6.2
104	28	522.0	1.2	R130	T132SL2	4.5
97	30	625.5	5.8	R250	T132SL2	26
97	15	647.6	5.1	R215	T132M4	21
97	15	632.9	2.8	R180	T132M4	15
97	15	625.5	2.0	R150	T132M4	9.9
97	15	618.1	1.4	R130	T132M4	6.8
97	15	603.5	0.9	R110	T132M4	4.6
96	10	656.6	5.6	R215	T160M6	21
96	10	649.1	3.1	R180	T160M6	16
96	10	641.6	2.2	R150	T160M6	11
79	37	732.6	3.2	CB180	T112BL2	11
79	37	735.1	3.2	CB180	T132SL2	11
73	40	792.0	2.1	CB150	T112BL2	7.8
73	40	743.1	1.4	R150	T112BL2	6.0
73	40	782.3	1.4	CB130	T112BL2	5.6
73	40	723.6	1.0	R130	T112BL2	4.0
73	40	723.6	0.7	R110	T112BL2	3.0
73	20	843.8	5.7	R250	T132M4	28
73	40	784.9	4.8	R250	T132SL2	20
73	20	843.8	3.9	R215	T132M4	18
73	40	794.7	3.0	R215	T132SL2	13
73	20	824.2	2.5	R180	T132M4	13
73	40	794.7	2.1	CB150	T132SL2	7.8
73	40	735.9	2.1	R180	T132SL2	8.3
73	20	824.2	1.7	R150	T132M4	9.3
73	40	745.7	1.4	R150	T132SL2	6.0
73	40	784.9	1.4	CB130	T132SL2	5.6
73	20	814.3	1.1	R130	T132M4	6.4
73	40	726.1	1.0	R130	T132SL2	4.0
70	42	831.6	5.1	CB215	T112BL2	13
70	42	834.5	5.1	CB215	T132SL2	13
68	43	840.9	0.8	CB110	T112BL2	4.2

1.7 - *Gearmotors*

n_2 min^{-1}	ir	T2 Nm	FS'		7.5 kW	Ptn kW
64	15	984.8	6.1	R250	T160M6	33
64	15	973.6	4.0	R215	T160M6	20
64	15	951.3	2.3	R180	T160M6	14
64	15	928.9	1.6	R150	T160M6	8.8
60	49	886.3	1.2	R150	T112BL2	5.5
60	49	862.3	0.8	R130	T112BL2	3.6
60	49	937.5	4.1	R250	T132SL2	18
60	49	889.5	1.8	R180	T132SL2	8.0
60	49	889.4	1.1	R150	T132SL2	5.5
59	50	977.8	1.9	CB150	T112BL2	7.4
59	50	965.6	1.2	CB130	T112BL2	5.3
58	50	956.6	2.5	R215	T132SL2	12
58	50	981.1	1.9	CB150	T132SL2	7.4
58	50	968.9	1.2	CB130	T132SL2	5.3
57	51	997.5	0.6	CB110	T112BL2	4.2
56	52	1030	6.1	CB250	T112BL2	20
56	52	1030	2.6	CB180	T112BL2	11
56	52	1033	6.1	CB250	T132SL2	20
56	52	1033	2.6	CB180	T132SL2	11
55	53	1050	4.4	CB215	T112BL2	13
55	53	1053	4.3	CB215	T132SL2	13
52	56	1013	1.0	R150	T112BL2	5.5
52	56	986	0.6	R130	T112BL2	3.5
52	28	1168	2.7	R215	T132M4	17
52	28	1085	1.7	R180	T132M4	9.9
52	56	1017	1.6	R180	T132SL2	7.7
52	28	1044	1.2	R150	T132M4	6.2
52	56	1017	1.0	R150	T132SL2	5.5
52	28	1044	0.8	R130	T132M4	4.5
51	57	1063	2.1	R215	T132SL2	11
51	58	1120	1.6	CB150	T112BL2	7.1
51	58	1120	1.1	CB130	T112BL2	5.3
50	58	1124	1.6	CB150	T132SL2	7.1
50	58	1124	1.1	CB130	T132SL2	5.3
49	30	1236	3.9	R250	T132M4	25
49	60	1133	3.2	R250	T132SL2	17
48	20	1268	4.5	R250	T160M6	26
48	20	1268	3.1	R215	T160M6	17
48	20	1239	1.9	R180	T160M6	12
47	62	1228	5.5	CB250	T112BL2	20
47	62	1212	4.0	CB215	T112BL2	13
47	62	1212	2.2	CB180	T112BL2	10
47	62	1232	5.4	CB250	T132SL2	20
47	62	1217	3.9	CB215	T132SL2	13
47	62	1217	2.1	CB180	T132SL2	10
42	69	1286	1.9	R215	T132SL2	11
42	70	1198	0.8	R150	T112BL2	4.5
42	70	1236	2.8	R250	T132SL2	14
42	70	1236	1.2	R180	T132SL2	6.5
42	70	1202	0.8	R150	T132SL2	4.5
41	72	1391	1.4	CB150	T112BL2	7.1
41	72	1373	0.9	CB130	T112BL2	5.1
41	72	1395	1.4	CB150	T132SL2	7.1
41	72	1377	0.9	CB130	T132SL2	5.1
39	37	1452	2.0	CB180	T132M4	10
39	75	1467	3.5	CB215	T112BL2	13
39	75	1448	1.9	CB180	T112BL2	9.7
39	75	1472	3.5	CB215	T132SL2	13
39	75	1453	1.9	CB180	T132SL2	9.7
38	38	1491	4.7	CB250	T132M4	19
38	78	1526	4.7	CB250	T112BL2	19
37	78	1531	4.7	CB250	T132SL2	19
37	79	1357	2.2	R250	T132SL2	13
37	80	1545	3.1	CB215	T112BL2	12
37	80	1350	0.7	R150	T112BL2	4.4
37	40	1550	3.2	R250	T132M4	19
37	80	1550	3.1	CB215	T132SL2	12
37	40	1550	2.0	R215	T132M4	12
37	80	1374	1.6	R215	T132SL2	8.5
37	40	1472	1.4	R180	T132M4	8.3
37	40	1550	1.3	CB150	T132M4	7.1
37	80	1354	1.1	R180	T132SL2	6.3
37	40	1472	1.0	R150	T132M4	6.0
37	40	1531	0.9	CB130	T132M4	5.1
37	80	1354	0.7	R150	T132SL2	4.4
37	40	1432	0.6	R130	T132M4	4.0
35	42	1628	3.2	CB215	T132M4	12
34	85	1579	1.7	CB180	T112BL2	8.5
34	85	1579	1.2	CB150	T112BL2	6.2
34	85	1538	0.8	CB130	T112BL2	4.3

1.7 - Getriebemotoren

n_2 min^{-1}	ir	T2 Nm	FS'		7.5 kW	Ptn kW
34	85	1585	1.7	CB180	T132SL2	8.5
34	85	1585	1.2	CB150	T132SL2	6.2
34	85	1543	0.8	CB130	T132SL2	4.3
34	28	1755	1.8	R215	T160M6	16
34	28	1608	1.4	R180	T160M6	9.0
33	90	1760	4.3	CB250	T112BL2	19
32	90	1766	4.3	CB250	T132SL2	19
32	30	1858	3.1	R250	T160M6	23
30	49	1851	2.7	R250	T132M4	17
30	98	1683	1.8	R250	T132SL2	13
30	49	1779	1.2	R180	T132M4	8.0
30	49	1707	0.8	R150	T132M4	5.5
29	50	1864	1.7	R215	T132M4	11
29	100	1717	1.3	R215	T132SL2	8.5
29	50	1913	1.2	CB150	T132M4	6.7
29	100	1594	0.8	R180	T132SL2	5.6
29	50	1913	0.8	CB130	T132M4	5.1
28	52	2015	3.9	CB250	T132M4	18
28	52	2015	1.6	CB180	T132M4	9.7
28	53	2054	2.7	CB215	T132M4	12
27	107	1962	1.5	CB180	T112BL2	8.2
27	107	1969	1.5	CB180	T132SL2	8.2
27	109	2105	3.8	CB250	T112BL2	18
27	109	2112	3.8	CB250	T132SL2	18
26	112	2136	2.5	CB215	T112BL2	11
26	112	2143	2.5	CB215	T132SL2	11
26	56	2006	1.0	R180	T132M4	7.7
26	56	2006	0.7	R150	T132M4	5.5
26	37	2153	1.6	CB180	T160M6	9.3
26	57	2070	1.4	R215	T132M4	9.9
25	115	2108	1.0	CB150	T112BL2	5.9
25	115	2052	0.6	CB130	T112BL2	4.2
25	115	2116	1.0	CB150	T132SL2	5.9
25	115	2059	0.6	CB130	T132SL2	4.2
25	38	2240	3.6	CB250	T160M6	18
25	58	2191	1.0	CB150	T132M4	6.4
25	58	2191	0.7	CB130	T132M4	4.9
24	120	2229	3.2	CB250	T112BL2	16
24	120	2237	3.2	CB250	T132SL2	16
24	60	2237	2.1	R250	T132M4	17
24	121	2249	2.2	CB215	T112BL2	10
24	121	2256	2.2	CB215	T132SL2	10
24	40	2298	2.5	R250	T160M6	17
24	40	2298	1.6	R215	T160M6	11
24	40	2179	1.1	R180	T160M6	7.7
24	40	2328	1.0	CB150	T160M6	6.7
24	40	2298	0.7	CB130	T160M6	4.7
24	124	2273	1.3	CB180	T112BL2	8.2
24	62	2403	3.5	CB250	T132M4	18
24	62	2372	2.5	CB215	T132M4	11
24	62	2372	1.3	CB180	T132M4	9.3
24	124	2281	1.3	CB180	T132SL2	8.2
23	42	2444	2.4	CB215	T160M6	11
21	69	2505	1.2	R215	T132M4	9.9
21	70	2438	1.8	R250	T132M4	14
21	70	2335	0.8	R180	T132M4	6.5
20	144	2605	0.8	CB150	T112BL2	5.7
20	72	2720	0.9	CB150	T132M4	6.4
20	144	2613	0.8	CB150	T132SL2	5.7
20	145	2694	2.8	CB250	T112BL2	16
20	145	2703	2.8	CB250	T132SL2	16
20	146	2712	1.9	CB215	T112BL2	10
20	146	2722	1.9	CB215	T132SL2	10
20	49	2742	2.1	R250	T160M6	16
20	49	2633	0.9	R180	T160M6	7.4
20	150	2714	1.2	CB180	T112BL2	7.9
19.5	75	2869	2.1	CB215	T132M4	11
19.5	75	2833	1.2	CB180	T132M4	8.9
19.5	150	2722	1.2	CB180	T132SL2	7.9
19.2	50	2760	1.3	R215	T160M6	9.9
19.2	50	2872	0.9	CB150	T160M6	6.4
18.7	78	2984	3.0	CB250	T132M4	17
18.5	79	2674	1.5	R250	T132M4	13
18.5	52	3026	3.0	CB250	T160M6	17
18.5	52	3026	1.2	CB180	T160M6	9.3
18.3	80	2983	2.0	CB215	T132M4	10
18.3	80	2669	1.0	R215	T132M4	8.0
18.3	80	2629	0.7	R180	T132M4	6.3
18.1	53	3045	2.1	CB215	T160M6	11
18.1	162	2653	0.7	CB150	T112BL2	4.5

1.7 - Motoriduttori

n_2 min^{-1}	ir	T2 Nm	FS'		7.5 kW	Ptn kW
18.0	162	2663	0.7	CB150	T132SL2	4.5
17.2	85	3085	1.1	CB180	T132M4	7.9
17.2	85	3043	0.8	CB150	T132M4	5.5
17.1	56	2967	0.8	R180	T160M6	7.2
16.8	174	2680	1.7	CB215	T112BL2	6.8
16.8	57	3020	1.1	R215	T160M6	8.8
16.8	174	2892	1.0	CB180	T112BL2	6.4
16.8	174	2689	1.7	CB215	T132SL2	6.8
16.8	174	2903	1.0	CB180	T132SL2	6.4
16.6	177	3203	2.2	CB250	T112BL2	15
16.6	58	3289	0.8	CB150	T160M6	6.2
16.5	177	3212	2.2	CB250	T132SL2	15
16.2	90	3444	2.7	CB250	T132M4	17
16.0	60	3313	1.7	R250	T160M6	15
15.5	62	3609	2.6	CB250	T160M6	17
15.5	62	3563	1.8	CB215	T160M6	11
15.5	62	3563	1.0	CB180	T160M6	8.9
14.9	98	3317	1.2	R250	T132M4	13
14.6	100	3336	0.8	R215	T132M4	8.0
14.5	202	3261	0.6	CB150	T112BL2	4.4
14.5	202	3269	0.6	CB150	T132SL2	4.4
14.2	207	3442	2.0	CB250	T112BL2	12
14.1	207	3452	2.0	CB250	T132SL2	12
13.9	69	3656	1.0	R215	T160M6	8.8
13.8	213	3540	1.2	CB215	T112BL2	7.8
13.8	213	3383	0.8	CB180	T112BL2	5.8
13.7	70	3553	1.4	R250	T160M6	12
13.7	213	3552	1.2	CB215	T132SL2	7.8
13.7	213	3396	0.8	CB180	T132SL2	5.8
13.7	70	3448	0.6	R180	T160M6	6.1
13.6	107	3834	0.9	CB180	T132M4	7.6
13.4	109	4172	2.3	CB250	T132M4	17
13.3	72	4030	0.6	CB150	T160M6	5.9
13.0	112	4120	1.5	CB215	T132M4	10
12.8	75	4253	1.6	CB215	T160M6	10
12.8	75	4253	0.9	CB180	T160M6	8.5
12.7	115	4061	0.6	CB150	T132M4	5.3
12.3	78	4480	2.2	CB250	T160M6	16
12.2	240	3930	1.8	CB250	T112BL2	11
12.2	120	4355	2.0	CB250	T132M4	15
12.2	240	3943	1.8	CB250	T132SL2	11
12.2	79	3950	1.1	R250	T160M6	12
12.1	121	4391	1.4	CB215	T132M4	9.6
12.0	80	4477	1.4	CB215	T160M6	10
12.0	80	3820	0.8	R215	T160M6	7.1
11.8	248	4064	1.1	CB215	T112BL2	7.6
11.8	248	3882	0.7	CB180	T112BL2	5.7
11.8	248	4077	1.1	CB215	T132SL2	7.6
11.8	124	4382	0.8	CB180	T132M4	7.3
11.8	248	3894	0.7	CB180	T132SL2	5.7
11.3	85	4568	0.8	CB180	T160M6	7.3
11.2	261	4018	0.7	CB180	T112BL2	5.5
11.2	261	4032	0.7	CB180	T132SL2	5.5
11.0	267	4244	1.0	CB215	T112BL2	7.2
10.9	267	4255	1.0	CB215	T132SL2	7.2
10.7	136	4468	1.4	110/215	T132M4	6.0
10.7	90	5169	2.0	CB250	T160M6	16
10.4	140	4464	2.0	130/250	T132M4	9.1
10.4	140	4464	0.8	110/180	T132M4	6.0
10.4	140	4601	0.8	130/180	T132M4	9.1
10.1	290	4610	1.6	CB250	T112BL2	11
10.1	145	5263	1.7	CB250	T132M4	15
10.1	290	4623	1.6	CB250	T132SL2	11
10.0	146	5229	1.2	CB215	T132M4	9.3
9.8	98	4897	0.9	R250	T160M6	12
9.8	300	4839	1.0	CB215	T112BL2	7.4
9.7	300	4859	1.0	CB215	T132SL2	7.4
9.7	150	5300	0.7	CB180	T132M4	7.3
9.6	304	4606	0.6	CB180	T112BL2	5.4
9.6	304	4621	0.6	CB180	T132SL2	5.4
9.6	100	4775	0.6	R215	T160M6	7.1
9.0	107	5669	0.7	CB180	T160M6	7.0
8.8	109	6260	1.7	CB250	T160M6	16
8.6	112	6185	1.2	CB215	T160M6	9.6
8.4	174	5378	1.0	CB215	T132M4	6.8
8.3	177	6251	1.4	CB250	T132M4	14
8.1	360	5632	1.3	CB250	T112BL2	11
8.1	360	5653	1.3	CB250	T132SL2	11
8.0	120	6536	1.5	CB250	T160M6	14
7.9	121	6503	1.0	CB215	T160M6	8.9

1.7 - *Gearmotors*

n_2 min^{-1}	ir	T2 Nm	FS'		7.5 kW	Ptn kW
7.8	375	5778	0.8	CB215	T112BL2	6.8
7.8	375	5793	0.8	CB215	T132SL2	6.8
7.7	124	6570	0.6	CB180	T160M6	7.0
7.5	195	6215	1.1	110/215	T132M4	5.6
7.3	200	5887	1.7	130/250	T132M4	8.4
7.3	200	6181	0.7	110/180	T132M4	5.6
7.3	200	6279	0.7	130/180	T132M4	8.4
7.1	207	6603	1.2	CB250	T132M4	11
6.9	213	6692	0.8	CB215	T132M4	7.0
6.9	428	6378	0.7	CB215	T112BL2	6.4
6.8	428	6407	0.7	CB215	T132SL2	6.4
6.7	435	6695	1.0	CB250	T112BL2	10
6.7	435	6725	1.0	CB250	T132SL2	10
6.6	145	7790	1.3	CB250	T160M6	14
6.6	146	7728	0.9	CB215	T160M6	8.6
6.1	240	7540	1.1	CB250	T132M4	11
5.9	248	7661	0.7	CB215	T132M4	6.8
5.8	508	7076	0.7	CB250	T112BL2	8.8
5.8	508	7101	0.7	CB250	T132SL2	8.8
5.5	174	8175	0.8	CB215	T160M6	6.8
5.5	267	7988	0.6	CB215	T132M4	6.4
5.4	177	9251	1.0	CB250	T160M6	13
5.1	573	7709	0.7	CB250	T112BL2	8.4
5.1	573	7724	0.7	CB250	T132SL2	8.4
5.0	290	8828	1.0	CB250	T132M4	11
5.0	293	8773	0.8	110/215	T132M4	5.6
4.9	300	8971	1.2	130/250	T132M4	8.4
4.9	300	9118	0.6	CB215	T132M4	6.6
4.6	207	9725	0.9	CB250	T160M6	10
4.1	360	10761	0.8	CB250	T132M4	9.7
4.0	240	11281	0.8	CB250	T160M6	10
3.7	400	10400	1.0	130/250	T132M4	6.4
3.4	435	12576	0.6	CB250	T132M4	9.2
3.3	290	12984	0.7	CB250	T160M6	10
2.7	360	15829	0.6	CB250	T160M6	9.2
2.4	600	13558	0.8	130/250	T132M4	6.8

1.7 - Getriebemotoren

n_2 min^{-1}	ir	T2 Nm	FS'		9.2 kW	Ptn kW
209	7	379.1	6.3	R215	T132ML4	26
209	7	374.9	4.0	R180	T132ML4	19
209	7	370.7	2.9	R150	T132ML4	12
209	7	370.7	1.9	R130	T132ML4	9.1
209	7	362.3	1.3	R110	T132ML4	6.0
146	10	535.6	5.7	R215	T132ML4	23
146	10	529.6	3.1	R180	T132ML4	17
146	10	523.6	2.3	R150	T132ML4	11
146	10	523.5	1.5	R130	T132ML4	8.4
146	10	511.5	1.1	R110	T132ML4	5.6
97	15	803.4	6.2	R250	T132ML4	36
97	15	794.4	4.2	R215	T132ML4	21
97	15	776.3	2.3	R180	T132ML4	15
97	15	767.3	1.7	R150	T132ML4	10
97	15	758.2	1.1	R130	T132ML4	6.8
97	15	740.3	0.7	R110	T132ML4	4.6
73	20	1035	4.6	R250	T132ML4	28
73	20	1035	3.2	R215	T132ML4	18
73	20	1011	2.0	R180	T132ML4	13
73	20	1011	1.4	R150	T132ML4	9.3
73	20	999	0.9	R130	T132ML4	6.4
52	28	1432	2.2	R215	T132ML4	17
52	28	1331	1.4	R180	T132ML4	10
52	28	1281	1.0	R150	T132ML4	6.2
52	28	1281	0.6	R130	T132ML4	4.5
49	30	1516	3.2	R250	T132ML4	25
39	37	1781	1.7	CB180	T132ML4	10
38	38	1830	3.9	CB250	T132ML4	19
37	40	1902	2.6	R250	T132ML4	19
37	40	1902	1.6	R215	T132ML4	12
37	40	1805	1.1	R180	T132ML4	8.3
37	40	1902	1.1	CB150	T132ML4	7.1
37	40	1805	0.8	R150	T132ML4	6.0
37	40	1878	0.7	CB130	T132ML4	5.1
35	42	1997	2.6	CB215	T132ML4	12
30	49	2270	2.2	R250	T132ML4	17
30	49	2182	1.0	R180	T132ML4	8.0
30	49	2093	0.6	R150	T132ML4	5.5
29	50	2287	1.4	R215	T132ML4	11
29	50	2347	0.9	CB150	T132ML4	6.7
29	50	2347	0.6	CB130	T132ML4	5.1
28	52	2472	3.2	CB250	T132ML4	18
28	52	2472	1.3	CB180	T132ML4	10
28	53	2519	2.2	CB215	T132ML4	12
26	56	2460	0.9	R180	T132ML4	7.7
26	57	2539	1.2	R215	T132ML4	10
25	58	2688	0.8	CB150	T132ML4	6.4
24	60	2745	1.7	R250	T132ML4	17
24	62	2947	2.8	CB250	T132ML4	18
24	62	2910	2.0	CB215	T132ML4	11
24	62	2910	1.1	CB180	T132ML4	9.3
21	69	3073	1.0	R215	T132ML4	10
21	70	2991	1.5	R250	T132ML4	14
21	70	2864	0.7	R180	T132ML4	6.5
20	72	3336	0.7	CB150	T132ML4	6.4
19.5	75	3520	1.7	CB215	T132ML4	11
19.5	75	3475	1.0	CB180	T132ML4	8.9
18.7	78	3661	2.4	CB250	T132ML4	17
18.5	79	3281	1.2	R250	T132ML4	13
18.3	80	3659	1.6	CB215	T132ML4	10
18.3	80	3274	0.9	R215	T132ML4	8.0
17.2	85	3784	0.9	CB180	T132ML4	7.9
17.2	85	3733	0.6	CB150	T132ML4	5.5
16.2	90	4225	2.2	CB250	T132ML4	17
14.9	98	4069	1.0	R250	T132ML4	13
14.6	100	4092	0.7	R215	T132ML4	8.0
13.6	107	4703	0.7	CB180	T132ML4	7.6
13.4	109	5118	1.9	CB250	T132ML4	17
13.0	112	5053	1.3	CB215	T132ML4	10
12.2	120	5342	1.6	CB250	T132ML4	15
12.1	121	5386	1.1	CB215	T132ML4	10
11.8	124	5375	0.7	CB180	T132ML4	7.3
10.7	136	5481	1.1	110/215	T132ML4	6.0
10.4	140	5476	1.6	130/250	T132ML4	9.1
10.4	140	5475	0.7	110/180	T132ML4	6.0
10.4	140	5644	0.7	130/180	T132ML4	9.1
10.1	145	6456	1.4	CB250	T132ML4	15
10.0	146	6414	1.0	CB215	T132ML4	9.3
8.4	174	6597	0.8	CB215	T132ML4	6.8
8.3	177	7668	1.1	CB250	T132ML4	14

1.7 - Motoriduttori

n_2 min^{-1}	ir	T2 Nm	FS'		9.2 kW	Ptn kW
7.5	195	7624	0.9	110/215	T132ML4	5.6
7.3	200	7221	1.4	130/250	T132ML4	8.4
7.1	207	8100	1.0	CB250	T132ML4	11
6.9	213	8209	0.6	CB215	T132ML4	7.0
6.1	240	9249	0.9	CB250	T132ML4	11
5.0	290	10829	0.8	CB250	T132ML4	11
5.0	293	10761	0.7	110/215	T132ML4	5.6
4.9	300	11005	1.0	130/250	T132ML4	8.4
4.1	360	13200	0.7	CB250	T132ML4	10
3.7	400	12758	0.8	130/250	T132ML4	6.4
2.4	600	16631	0.6	130/250	T132ML4	6.8

1.7 - *Gearmotors*

n_2 min^{-1}	ir	T2 Nm	FS'		11.0 kW	Ptn kW
424	7	220.4	4.6	R180	T160MA2	19
424	7	217.9	3.5	R150	T160MA2	12
420	7	222.6	4.6	R180	T132M2	19
420	7	220.1	3.4	R150	T132M2	12
420	7	220.1	2.3	R130	T132M2	9
420	7	215.1	1.6	R110	T132M2	6
297	10	311.3	3.8	R180	T160MA2	17
297	10	307.7	2.8	R150	T160MA2	11
294	10	314.4	3.8	R180	T132M2	17
294	10	310.9	2.7	R150	T132M2	11
294	10	310.9	1.8	R130	T132M2	8
294	10	303.7	1.3	R110	T132M2	6
210	7	450.2	5.3	R215	T160M4	26
210	7	445.2	3.4	R180	T160M4	19
210	7	440.2	2.4	R150	T160M4	12
198	15	466.9	5.1	R215	T160MA2	21
198	15	456.3	2.9	R180	T160MA2	15
198	15	451.0	2.1	R150	T160MA2	10
196	15	471.7	5.1	R215	T132M2	21
196	15	460.9	2.9	R180	T132M2	15
196	15	455.6	2.1	R150	T132M2	10
196	15	450.2	1.4	R130	T132M2	7
196	15	444.9	0.9	R110	T132M2	5
149	20	608.4	5.8	R250	T160MA2	28
149	20	615.4	4.1	R215	T160MA2	20
149	20	594.2	2.6	R180	T160MA2	13
147	20	614.6	5.7	R250	T132M2	28
147	10	636.0	4.8	R215	T160M4	23
147	20	621.7	4.0	R215	T132M2	20
147	10	628.9	2.6	R180	T160M4	17
147	20	600.3	2.5	R180	T132M2	13
147	10	621.7	1.9	R150	T160M4	11
147	20	600.3	1.8	R150	T132M2	9
147	20	593.1	1.2	R130	T132M2	6
137	7	681.7	5.9	R250	T160L6	36
137	7	681.7	4.3	R215	T160L6	23
137	7	674.1	2.7	R180	T160L6	17
137	7	666.4	2.0	R150	T160L6	11
134	11	699.6	6.1	R250	T160M4	36
106	28	851.7	2.8	R215	T160MA2	18
106	28	792.3	1.8	R180	T160MA2	10
105	28	860.4	2.8	R215	T132M2	18
105	28	800.4	1.7	R180	T132M2	10
105	28	770.4	1.3	R150	T132M2	6
105	28	760.4	0.8	R130	T132M2	5
99	30	901.9	4.0	R250	T160MA2	26
98	15	954.0	5.2	R250	T160M4	36
98	30	911.1	4.0	R250	T132M2	26
98	15	943.3	3.5	R215	T160M4	21
98	15	921.9	2.0	R180	T160M4	15
98	15	911.2	1.4	R150	T160M4	10
96	10	963.0	3.8	R215	T160L6	21
96	10	952.0	2.1	R180	T160L6	16
96	10	941.1	1.5	R150	T160L6	11
87	11	1071	4.8	R250	T160L6	36
80	37	1060	2.2	CB180	T160MA2	11
79	37	1071	2.2	CB180	T132M2	11
78	38	1102	5.0	CB250	T160MA2	21
77	38	1113	4.9	CB250	T132M2	21
74	40	1132	3.4	R250	T160MA2	20
74	40	1146	2.1	R215	T160MA2	13
74	40	1146	1.5	CB150	T160MA2	8
74	40	1061	1.4	R180	T160MA2	8
74	40	1132	1.0	CB130	T160MA2	6
74	20	1229	3.9	R250	T160M4	28
74	40	1143	3.3	R250	T132M2	20
74	20	1229	2.7	R215	T160M4	18
74	40	1158	2.1	R215	T132M2	13
74	20	1201	1.7	R180	T160M4	13
74	40	1158	1.5	CB150	T132M2	8
74	40	1072	1.4	R180	T132M2	8
74	40	1086	1.0	R150	T132M2	6
74	40	1143	1.0	CB130	T132M2	6
74	40	1058	0.7	R130	T132M2	4
71	42	1203	3.5	CB215	T160MA2	13
70	42	1216	3.5	CB215	T132M2	13
64	15	1444	4.2	R250	T160L6	33
64	15	1428	2.7	R215	T160L6	20
64	15	1395	1.5	R180	T160L6	14
64	15	1362	1.1	R150	T160L6	9

1.7 - Getriebemotoren

n_2 min^{-1}	ir	T2 Nm	FS'		11.0 kW	Ptn kW
61	49	1352	2.8	R250	T160MA2	18
61	49	1283	1.2	R180	T160MA2	8
60	49	1366	2.8	R250	T132M2	18
60	49	1296	1.2	R180	T132M2	8
60	49	1296	0.8	R150	T132M2	6
59	50	1380	1.7	R215	T160MA2	12
59	50	1415	1.3	CB150	T160MA2	7
59	50	1397	0.9	CB130	T160MA2	5
59	50	1394	1.7	R215	T132M2	12
59	50	1429	1.3	CB150	T132M2	7
59	50	1411	0.8	CB130	T132M2	5
57	52	1490	4.2	CB250	T160MA2	20
57	52	1490	1.8	CB180	T160MA2	11
57	52	1505	4.2	CB250	T132M2	20
57	52	1505	1.8	CB180	T132M2	11
56	53	1518	3.0	CB215	T160MA2	13
55	53	1534	3.0	CB215	T132M2	13
53	56	1466	1.1	R180	T160MA2	8
53	28	1701	1.9	R215	T160M4	17
53	28	1581	1.2	R180	T160M4	10
53	56	1481	1.1	R180	T132M2	8
53	56	1481	0.7	R150	T132M2	6
52	57	1532	1.5	R215	T160MA2	11
52	57	1548	1.5	R215	T132M2	11
51	58	1621	1.1	CB150	T160MA2	7
51	58	1621	0.7	CB130	T160MA2	5
51	58	1637	1.1	CB150	T132M2	7
51	58	1637	0.7	CB130	T132M2	5
50	60	1634	2.2	R250	T160MA2	17
49	30	1801	2.7	R250	T160M4	25
49	60	1651	2.2	R250	T132M2	17
48	20	1860	3.1	R250	T160L6	26
48	20	1860	2.1	R215	T160L6	17
48	20	1816	1.3	R180	T160L6	12
48	62	1776	3.8	CB250	T160MA2	20
48	62	1755	2.7	CB215	T160MA2	13
48	62	1755	1.5	CB180	T160MA2	10
47	62	1794	3.7	CB250	T132M2	20
47	62	1772	2.7	CB215	T132M2	13
47	62	1772	1.5	CB180	T132M2	10
43	69	1855	1.3	R215	T160MA2	11
43	69	1874	1.3	R215	T132M2	11
42	70	1783	1.9	R250	T160MA2	14
42	70	1783	0.8	R180	T160MA2	6
42	70	1801	1.9	R250	T132M2	14
42	70	1801	0.8	R180	T132M2	6
41	72	2012	1.0	CB150	T160MA2	7
41	72	1986	0.6	CB130	T160MA2	5
41	72	2033	1.0	CB150	T132M2	7
41	72	2007	0.6	CB130	T132M2	5
40	37	2115	1.4	CB180	T160M4	10
40	75	2122	2.4	CB215	T160MA2	13
40	75	2096	1.3	CB180	T160MA2	10
39	75	2144	2.4	CB215	T132M2	13
39	75	2117	1.3	CB180	T132M2	10
39	38	2173	3.2	CB250	T160M4	19
38	78	2207	3.3	CB250	T160MA2	19
38	78	2230	3.2	CB250	T132M2	19
38	79	1956	1.5	R250	T160MA2	13
37	79	1976	1.5	R250	T132M2	13
37	80	2236	2.1	CB215	T160MA2	12
37	80	1981	1.1	R215	T160MA2	9
37	40	2258	2.2	R250	T160M4	19
37	80	2258	2.1	CB215	T132M2	12
37	40	2258	1.4	R215	T160M4	12
37	80	2001	1.1	R215	T132M2	9
37	40	2144	0.9	R180	T160M4	8
37	40	2258	0.9	CB150	T160M4	7
37	80	1972	0.7	R180	T132M2	6
37	40	2230	0.6	CB130	T160M4	5
35	42	2371	2.2	CB215	T160M4	12
35	85	2285	1.2	CB180	T160MA2	9
35	85	2285	0.8	CB150	T160MA2	6
35	85	2308	1.2	CB180	T132M2	9
35	85	2308	0.8	CB150	T132M2	6
34	28	2574	1.2	R215	T160L6	16
34	28	2359	0.9	R180	T160L6	9
33	90	2547	3.0	CB250	T160MA2	19
33	90	2572	2.9	CB250	T132M2	19
32	30	2725	2.1	R250	T160L6	23

1.7 - Motoriduttori

n_2 min^{-1}	ir	T2 Nm	FS'		11.0 kW	Ptn kW
30	98	2426	1.2	R250	T160MA2	13
30	49	2696	1.9	R250	T160M4	17
30	98	2451	1.2	R250	T132M2	13
30	49	2591	0.8	R180	T160M4	8
30	100	2476	0.9	R215	T160MA2	9
29	50	2716	1.2	R215	T160M4	11
29	100	2501	0.9	R215	T132M2	9
29	50	2787	0.8	CB150	T160M4	7
28	52	2936	2.7	CB250	T160M4	18
28	52	2936	1.1	CB180	T160M4	10
28	107	2838	1.0	CB180	T160MA2	8
28	53	2992	1.9	CB215	T160M4	12
27	107	2867	1.0	CB180	T132M2	8
27	109	3046	2.6	CB250	T160MA2	18
27	109	3077	2.6	CB250	T132M2	18
27	112	3090	1.7	CB215	T160MA2	11
26	112	3121	1.7	CB215	T132M2	11
26	56	2922	0.7	R180	T160M4	8
26	37	3158	1.1	CB180	T160L6	9
26	115	3050	0.7	CB150	T160MA2	6
26	57	3014	1.0	R215	T160M4	10
26	115	3081	0.7	CB150	T132M2	6
25	58	3192	0.7	CB150	T160M4	6
25	38	3285	2.4	CB250	T160L6	18
25	120	3226	2.2	CB250	T160MA2	16
25	121	3252	1.5	CB215	T160MA2	10
25	120	3259	2.2	CB250	T132M2	16
25	60	3259	1.4	R250	T160M4	17
24	121	3286	1.5	CB215	T132M2	10
24	40	3370	1.7	R250	T160L6	17
24	40	3370	1.1	R215	T160L6	11
24	40	3195	0.7	R180	T160L6	8
24	40	3414	0.7	CB150	T160L6	7
24	124	3290	0.9	CB180	T160MA2	8
24	62	3500	2.4	CB250	T160M4	18
24	62	3456	1.7	CB215	T160M4	11
24	62	3456	0.9	CB180	T160M4	9
24	124	3323	0.9	CB180	T132M2	8
23	42	3584	1.7	CB215	T160L6	11
21	69	3650	0.8	R215	T160M4	10
21	70	3552	1.2	R250	T160M4	14
20	145	3898	1.9	CB250	T160MA2	16
20	146	3925	1.3	CB215	T160MA2	10
20	145	3937	1.9	CB250	T132M2	16
20	146	3964	1.3	CB215	T132M2	10
20	150	3926	0.8	CB180	T160MA2	8
20	75	4181	1.5	CB215	T160M4	11
20	75	4127	0.8	CB180	T160M4	9
20	150	3966	0.8	CB180	T132M2	8
20	49	4022	1.4	R250	T160L6	16
20	49	3861	0.6	R180	T160L6	7
19.2	50	4049	0.9	R215	T160L6	10
18.9	78	4347	2.0	CB250	T160M4	17
18.6	79	3895	1.0	R250	T160M4	13
18.5	52	4439	2.0	CB250	T160L6	17
18.5	52	4439	0.8	CB180	T160L6	9
18.4	80	4344	1.3	CB215	T160M4	10
18.4	80	3886	0.7	R215	T160M4	8
18.1	53	4467	1.4	CB215	T160L6	11
17.3	85	4496	0.7	CB180	T160M4	8
17.1	174	3877	1.2	CB215	T160MA2	7
17.1	174	4185	0.7	CB180	T160MA2	6
16.9	174	3916	1.2	CB215	T132M2	7
16.9	174	4227	0.7	CB180	T132M2	6
16.8	57	4429	0.8	R215	T160L6	9
16.8	177	4633	1.5	CB250	T160MA2	15
16.6	177	4680	1.5	CB250	T132M2	15
16.3	90	5018	1.8	CB250	T160M4	17
16.0	60	4859	1.1	R250	T160L6	15
15.5	62	5293	1.8	CB250	T160L6	17
15.5	62	5225	1.3	CB215	T160L6	11
15.5	62	5225	0.7	CB180	T160L6	9
15.0	98	4832	0.8	R250	T160M4	13
14.4	207	4978	1.4	CB250	T160MA2	12
14.2	207	5031	1.4	CB250	T132M2	12
13.9	213	5125	0.8	CB215	T160MA2	8
13.9	69	5362	0.7	R215	T160L6	9
13.8	213	5176	0.8	CB215	T132M2	8
13.7	107	5581	0.6	CB180	T160M4	8
13.7	70	5210	1.0	R250	T160L6	12

1.7 - *Gearmotors*

n_2 min^{-1}	ir	T2 Nm	FS'		11.0 kW	Ptn kW
13.5	109	6074	1.6	CB250	T160M4	17
13.1	112	6005	1.1	CB215	T160M4	10
12.8	75	6238	1.1	CB215	T160L6	10
12.4	240	5685	1.3	CB250	T160MA2	11
12.3	78	6571	1.5	CB250	T160L6	16
12.3	120	6346	1.4	CB250	T160M4	15
12.3	240	5746	1.2	CB250	T132M2	11
12.2	121	6398	0.9	CB215	T160M4	10
12.2	79	5793	0.8	R250	T160L6	12
12.0	80	6566	1.0	CB215	T160L6	10
12.0	248	5875	0.8	CB215	T160MA2	8
11.9	248	5940	0.8	CB215	T132M2	8
11.1	267	6140	0.7	CB215	T160MA2	7
11.0	267	6202	0.7	CB215	T132M2	7
10.7	90	7581	1.3	CB250	T160L6	16
10.2	290	6668	1.1	CB250	T160MA2	11
10.1	145	7666	1.2	CB250	T160M4	15
10.1	290	6734	1.1	CB250	T132M2	11
10.1	146	7615	0.8	CB215	T160M4	9
9.9	300	7003	0.7	CB215	T160MA2	7
9.8	300	7075	0.7	CB215	T132M2	7
9.8	98	7182	0.6	R250	T160L6	12
8.8	109	9181	1.1	CB250	T160L6	16
8.6	112	9071	0.8	CB215	T160L6	10
8.5	174	7832	0.7	CB215	T160M4	7
8.3	177	9102	0.9	CB250	T160M4	14
8.3	360	8150	0.9	CB250	T160MA2	11
8.2	360	8230	0.9	CB250	T132M2	11
8.0	120	9586	1.0	CB250	T160L6	14
7.9	121	9537	0.7	CB215	T160L6	9
7.1	207	9617	0.9	CB250	T160M4	11
6.8	435	9690	0.7	CB250	T160MA2	10
6.8	435	9791	0.7	CB250	T132M2	10
6.6	145	11425	0.9	CB250	T160L6	14
6.6	146	11335	0.6	CB215	T160L6	9
6.1	240	10986	0.8	CB250	T160M4	11
5.4	177	13568	0.7	CB250	T160L6	13
5.1	290	12847	0.7	CB250	T160M4	11
4.6	207	14264	0.6	CB250	T160L6	10

1.7 - Getriebemotoren

n_2 min^{-1}	ir	T2 Nm	FS'		15.0 kW	Ptn kW
423	7	304.9	5.4	R215	T160MB2	26
423	7	301.5	3.4	R180	T160MB2	19
423	7	298.1	2.5	R150	T160MB2	12
420	7	307.0	5.4	R215	T132ML2	26
420	7	303.6	3.3	R180	T132ML2	19
420	7	300.1	2.5	R150	T132ML2	12
420	7	300.1	1.7	R130	T132ML2	9
420	7	293.3	1.2	R110	T132ML2	6
296	10	430.7	5.0	R215	T160MB2	23
296	10	425.9	2.8	R180	T160MB2	17
296	10	421.0	2.0	R150	T160MB2	11
294	10	433.6	5.0	R215	T132ML2	23
294	10	428.8	2.8	R180	T132ML2	17
294	10	423.9	2.0	R150	T132ML2	11
294	10	423.9	1.4	R130	T132ML2	8
294	10	414.2	0.9	R110	T132ML2	6
269	11	473.8	6.4	R250	T160MB2	36
267	11	477.0	6.4	R250	T132ML2	36
211	7	609.8	5.2	R250	T160L4	40
211	7	609.8	3.9	R215	T160L4	26
211	7	603.0	2.5	R180	T160L4	19
211	7	596.2	1.8	R150	T160L4	12
197	15	646.1	5.6	R250	T160MB2	36
197	15	638.8	3.8	R215	T160MB2	21
197	15	624.3	2.1	R180	T160MB2	15
197	15	617.1	1.5	R150	T160MB2	10
196	15	650.5	5.5	R250	T132ML2	36
196	15	643.2	3.7	R215	T132ML2	21
196	15	628.5	2.1	R180	T132ML2	15
196	15	621.2	1.5	R150	T132ML2	10
196	15	613.9	1.0	R130	T132ML2	7
196	15	606.6	0.7	R110	T132ML2	5
148	20	832.4	4.2	R250	T160MB2	28
148	10	861.4	3.5	R215	T160L4	23
148	20	842.1	3.0	R215	T160MB2	20
148	10	851.7	1.9	R180	T160L4	17
148	20	813.0	1.9	R180	T160MB2	13
148	10	842.1	1.4	R150	T160L4	11
147	20	838.1	4.2	R250	T132ML2	28
147	20	847.8	2.9	R215	T132ML2	20
147	20	818.6	1.9	R180	T132ML2	13
147	20	818.6	1.3	R150	T132ML2	9
147	20	808.8	0.8	R130	T132ML2	6
139	7	920.1	4.3	R250	T180L6	36
139	7	920.1	3.2	R215	T180L6	23
139	7	909.7	2.0	R180	T180L6	17
135	11	947.5	4.5	R250	T160L4	36
106	28	1165	2.1	R215	T160MB2	18
106	28	1084	1.3	R180	T160MB2	10
105	28	1173	2.0	R215	T132ML2	18
105	28	1091	1.3	R180	T132ML2	10
105	28	1051	0.9	R150	T132ML2	6
99	15	1292	3.9	R250	T160L4	36
99	30	1234	2.9	R250	T160MB2	26
99	15	1278	2.6	R215	T160L4	21
99	15	1249	1.4	R180	T160L4	15
99	15	1234	1.0	R150	T160L4	10
98	30	1243	2.9	R250	T132ML2	26
97	10	1300	2.8	R215	T180L6	21
97	10	1285	1.5	R180	T180L6	16
88	11	1446	3.6	R250	T180L6	36
80	37	1450	1.6	CB180	T160MB2	11
79	37	1460	1.6	CB180	T132ML2	11
78	38	1508	3.7	CB250	T160MB2	21
77	38	1518	3.6	CB250	T132ML2	21
74	20	1665	2.9	R250	T160L4	28
74	40	1549	2.5	R250	T160MB2	20
74	20	1665	2.0	R215	T160L4	18
74	40	1568	1.5	R215	T160MB2	13
74	20	1626	1.3	R180	T160L4	13
74	40	1568	1.1	CB150	T160MB2	8
74	40	1452	1.1	R180	T160MB2	8
74	40	1549	0.7	CB130	T160MB2	6
74	40	1559	2.4	R250	T132ML2	20
74	40	1579	1.5	R215	T132ML2	13
74	40	1579	1.1	CB150	T132ML2	8
74	40	1462	1.0	R180	T132ML2	8
74	40	1481	0.7	R150	T132ML2	6
74	40	1559	0.7	CB130	T132ML2	6
70	42	1646	2.6	CB215	T160MB2	13

1.7 - Motoriduttori

n_2 min^{-1}	ir	T2 Nm	FS'		15.0 kW	Ptn kW
70	42	1658	2.5	CB215	T132ML2	13
65	15	1949	3.1	R250	T180L6	33
65	15	1927	2.0	R215	T180L6	20
65	15	1883	1.1	R180	T180L6	14
60	49	1850	2.1	R250	T160MB2	18
60	49	1755	0.9	R180	T160MB2	8
60	49	1862	2.0	R250	T132ML2	18
60	49	1767	0.9	R180	T132ML2	8
59	50	1887	1.3	R215	T160MB2	12
59	50	1936	0.9	CB150	T160MB2	7
59	50	1912	0.6	CB130	T160MB2	5
59	50	1900	1.3	R215	T132ML2	12
59	50	1949	0.9	CB150	T132ML2	7
59	50	1925	0.6	CB130	T132ML2	5
57	52	2039	3.1	CB250	T160MB2	20
57	52	2039	1.3	CB180	T160MB2	11
57	52	2052	3.1	CB250	T132ML2	20
57	52	2052	1.3	CB180	T132ML2	11
56	53	2078	2.2	CB215	T160MB2	13
55	53	2092	2.2	CB215	T132ML2	13
53	28	2304	1.4	R215	T160L4	17
53	28	2141	0.9	R180	T160L4	10
53	56	2005	0.8	R180	T160MB2	8
53	56	2019	0.8	R180	T132ML2	8
52	57	2097	1.1	R215	T160MB2	11
52	57	2111	1.1	R215	T132ML2	11
51	58	2218	0.8	CB150	T160MB2	7
51	58	2233	0.8	CB150	T132ML2	7
49	30	2439	2.0	R250	T160L4	25
49	60	2236	1.6	R250	T160MB2	17
49	60	2251	1.6	R250	T132ML2	17
49	20	2511	2.3	R250	T180L6	26
49	20	2511	1.6	R215	T180L6	17
48	62	2431	2.8	CB250	T160MB2	20
48	62	2401	2.0	CB215	T160MB2	13
48	62	2401	1.1	CB180	T160MB2	10
47	62	2447	2.7	CB250	T132ML2	20
47	62	2417	2.0	CB215	T132ML2	13
47	62	2417	1.1	CB180	T132ML2	10
43	69	2538	0.9	R215	T160MB2	11
43	69	2555	0.9	R215	T132ML2	11
42	70	2439	1.4	R250	T160MB2	14
42	70	2439	0.6	R180	T160MB2	6
42	70	2456	1.4	R250	T132ML2	14
42	70	2456	0.6	R180	T132ML2	6
41	72	2753	0.7	CB150	T160MB2	7
41	72	2772	0.7	CB150	T132ML2	7
40	37	2865	1.0	CB180	T160L4	10
39	75	2904	1.8	CB215	T160MB2	13
39	75	2867	1.0	CB180	T160MB2	10
39	75	2924	1.7	CB215	T132ML2	13
39	75	2887	1.0	CB180	T132ML2	10
39	38	2942	2.4	CB250	T160L4	19
38	78	3020	2.4	CB250	T160MB2	19
38	78	3041	2.4	CB250	T132ML2	19
37	79	2676	1.1	R250	T160MB2	13
37	79	2694	1.1	R250	T132ML2	13
37	40	3059	1.6	R250	T160L4	19
37	80	3059	1.6	CB215	T160MB2	12
37	40	3059	1.0	R215	T160L4	12
37	80	2710	0.8	R215	T160MB2	9
37	40	2904	0.7	R180	T160L4	8
37	40	3059	0.7	CB150	T160L4	7
37	80	3079	1.6	CB215	T132ML2	12
37	80	2729	0.8	R215	T132ML2	9
35	42	3211	1.6	CB215	T160L4	12
35	85	3127	0.9	CB180	T160MB2	9
35	85	3127	0.6	CB150	T160MB2	6
35	28	3474	0.9	R215	T180L6	16
35	85	3147	0.9	CB180	T132ML2	9
35	85	3147	0.6	CB150	T132ML2	6
33	90	3484	2.2	CB250	T160MB2	19
33	90	3508	2.2	CB250	T132ML2	19
32	30	3678	1.6	R250	T180L6	23
30	49	3653	1.4	R250	T160L4	17
30	98	3320	0.9	R250	T160MB2	13
30	98	3343	0.9	R250	T132ML2	13
30	50	3678	0.9	R215	T160L4	11
30	100	3388	0.6	R215	T160MB2	9
29	100	3411	0.6	R215	T132ML2	9

1.7 - *Gearmotors*

n_2 min^{-1}	ir	T2 Nm	FS'		15.0 kW	Ptn kW
28	52	3976	2.0	CB250	T160L4	18
28	52	3976	0.8	CB180	T160L4	10
28	53	4053	1.4	CB215	T160L4	12
28	107	3884	0.7	CB180	T160MB2	8
27	107	3910	0.7	CB180	T132ML2	8
27	109	4167	1.9	CB250	T160MB2	18
27	109	4196	1.9	CB250	T132ML2	18
26	112	4228	1.3	CB215	T160MB2	11
26	112	4257	1.2	CB215	T132ML2	11
26	37	4262	0.8	CB180	T180L6	9
26	57	4083	0.7	R215	T160L4	10
26	38	4433	1.8	CB250	T180L6	18
25	120	4413	1.6	CB250	T160MB2	16
25	60	4413	1.1	R250	T160L4	17
25	120	4444	1.6	CB250	T132ML2	16
24	121	4451	1.1	CB215	T160MB2	10
24	121	4480	1.1	CB215	T132ML2	10
24	40	4549	1.3	R250	T180L6	17
24	40	4549	0.8	R215	T180L6	11
24	62	4741	1.8	CB250	T160L4	18
24	62	4681	1.3	CB215	T160L4	11
24	62	4681	0.7	CB180	T160L4	9
24	124	4501	0.7	CB180	T160MB2	8
24	124	4531	0.7	CB180	T132ML2	8
23	42	4837	1.2	CB215	T180L6	11
21	69	4942	0.6	R215	T160L4	10
21	70	4811	0.9	R250	T160L4	14
20	145	5334	1.4	CB250	T160MB2	16
20	145	5369	1.4	CB250	T132ML2	16
20	146	5371	1.0	CB215	T160MB2	10
20	146	5406	1.0	CB215	T132ML2	10
20	49	5426	1.1	R250	T180L6	16
20	75	5663	1.1	CB215	T160L4	11
19.4	50	5464	0.7	R215	T180L6	10
19.0	78	5890	1.5	CB250	T160L4	17
18.7	79	5277	0.7	R250	T160L4	13
18.7	52	5991	1.5	CB250	T180L6	17
18.7	52	5991	0.6	CB180	T180L6	9
18.5	80	5885	1.0	CB215	T160L4	10
18.3	53	6028	1.0	CB215	T180L6	11
17.0	174	5306	0.9	CB215	T160MB2	7
16.9	174	5340	0.9	CB215	T132ML2	7
16.7	177	6340	1.1	CB250	T160MB2	15
16.6	177	6382	1.1	CB250	T132ML2	15
16.4	90	6797	1.3	CB250	T160L4	17
16.2	60	6555	0.8	R250	T180L6	15
15.7	62	7140	1.3	CB250	T180L6	17
15.7	62	7048	0.9	CB215	T180L6	11
14.3	207	6812	1.0	CB250	T160MB2	12
14.2	207	6860	1.0	CB250	T132ML2	12
13.9	213	7008	0.6	CB215	T160MB2	8
13.9	70	7028	0.7	R250	T180L6	12
13.8	213	7059	0.6	CB215	T132ML2	8
13.6	109	8228	1.2	CB250	T160L4	17
13.2	112	8133	0.8	CB215	T160L4	10
12.9	75	8420	0.8	CB215	T180L6	10
12.4	78	8867	1.1	CB250	T180L6	16
12.3	120	8597	1.0	CB250	T160L4	15
12.3	240	7784	0.9	CB250	T160MB2	11
12.3	240	7835	0.9	CB250	T132ML2	11
12.2	121	8668	0.7	CB215	T160L4	10
12.1	80	8864	0.7	CB215	T180L6	10
10.8	90	10232	1.0	CB250	T180L6	16
10.2	145	10382	0.9	CB250	T160L4	15
10.2	290	9120	0.8	CB250	T160MB2	11
10.1	290	9182	0.8	CB250	T132ML2	11
10.1	146	10313	0.6	CB215	T160L4	9
8.9	109	12394	0.8	CB250	T180L6	16
8.4	177	12337	0.7	CB250	T160L4	14
8.2	360	11154	0.7	CB250	T160MB2	11
8.2	360	11222	0.7	CB250	T132ML2	11
8.1	120	12943	0.7	CB250	T180L6	14
7.2	207	13023	0.6	CB250	T160L4	11
6.7	145	15417	0.7	CB250	T180L6	14

1.7 - Getriebemotoren

n_2 min^{-1}	ir	T2 Nm	FS'		18.5 kW	Ptn kW
423	7	376.0	5.9	R250	T160L2	40
423	7	376.0	4.4	R215	T160L2	26
423	7	371.9	2.7	R180	T160L2	19
423	7	367.7	2.1	R150	T160L2	12
296	10	531.2	4.1	R215	T160L2	23
296	10	525.3	2.3	R180	T160L2	17
296	10	519.3	1.6	R150	T160L2	11
269	11	584.3	5.2	R250	T160L2	36
210	7	757.2	4.2	R250	T180M4	40
210	7	757.2	3.2	R215	T180M4	26
210	7	748.8	2.0	R180	T180M4	19
197	15	796.8	4.5	R250	T160L2	36
197	15	787.9	3.0	R215	T160L2	21
197	15	770.0	1.7	R180	T160L2	15
197	15	761.0	1.2	R150	T160L2	10
148	20	1027	3.4	R250	T160L2	28
148	20	1039	2.4	R215	T160L2	20
148	20	1003	1.5	R180	T160L2	13
147	10	1070	2.8	R215	T180M4	23
147	10	1058	1.6	R180	T180M4	17
139	7	1129	3.5	R250	T200LA6	36
139	7	1129	2.6	R215	T200LA6	23
134	11	1177	3.6	R250	T180M4	36
106	28	1437	1.7	R215	T160L2	18
106	28	1337	1.0	R180	T160L2	10
99	30	1522	2.4	R250	T160L2	26
98	15	1605	3.1	R250	T180M4	36
98	15	1587	2.1	R215	T180M4	21
98	15	1550	1.2	R180	T180M4	15
98	10	1595	2.3	R215	T200LA6	21
89	11	1774	2.9	R250	T200LA6	36
80	37	1789	1.3	CB180	T160L2	11
78	38	1860	3.0	CB250	T160L2	21
74	40	1910	2.0	R250	T160L2	20
74	40	1934	1.2	R215	T160L2	13
74	40	1934	0.9	CB150	T160L2	8
74	40	1791	0.9	R180	T160L2	8
74	20	2067	2.3	R250	T180M4	28
74	20	2067	1.6	R215	T180M4	18
70	42	2030	2.1	CB215	T160L2	13
65	15	2392	2.5	R250	T200LA6	33
65	15	2365	1.6	R215	T200LA6	20
60	49	2281	1.7	R250	T160L2	18
60	49	2164	0.7	R180	T160L2	8
59	50	2328	1.0	R215	T160L2	12
59	50	2388	0.8	CB150	T160L2	7
57	52	2514	2.5	CB250	T160L2	20
57	52	2514	1.1	CB180	T160L2	11
56	53	2562	1.8	CB215	T160L2	13
53	56	2473	0.7	R180	T160L2	8
53	28	2861	1.1	R215	T180M4	17
52	57	2586	0.9	R215	T160L2	11
51	58	2735	0.7	CB150	T160L2	7
49	60	2758	1.3	R250	T160L2	17
49	30	3029	1.6	R250	T180M4	25
48	62	2998	2.2	CB250	T160L2	20
48	62	2961	1.6	CB215	T160L2	13
48	62	2961	0.9	CB180	T160L2	10
43	69	3130	0.8	R215	T160L2	11
42	70	3008	1.1	R250	T160L2	14
40	37	3558	0.8	CB180	T180M4	10
39	75	3581	1.4	CB215	T160L2	13
39	75	3536	0.8	CB180	T160L2	10
39	38	3654	1.9	CB250	T180M4	19
38	78	3724	1.9	CB250	T160L2	19
37	79	3301	0.9	R250	T160L2	13
37	80	3772	1.3	CB215	T160L2	12
37	80	3342	0.7	R215	T160L2	9
37	40	3798	1.3	R250	T180M4	19
37	40	3798	0.8	R215	T180M4	12
35	42	3988	1.3	CB215	T180M4	12
35	85	3856	0.7	CB180	T160L2	9
33	90	4297	1.8	CB250	T160L2	19
30	98	4095	0.7	R250	T160L2	13
30	49	4535	1.1	R250	T180M4	17
29	50	4567	0.7	R215	T180M4	11
28	52	4937	1.6	CB250	T180M4	18
28	52	4937	0.7	CB180	T180M4	10
28	53	5032	1.1	CB215	T180M4	12
28	107	4791	0.6	CB180	T160L2	8

1.7 - Motoriduttori

n_2 min^{-1}	ir	T2 Nm	FS'		18.5 kW	Ptn kW
27	109	5139	1.6	CB250	T160L2	18
26	112	5214	1.0	CB215	T160L2	11
26	37	5230	0.6	CB180	T200LA6	9
26	38	5439	1.5	CB250	T200LA6	18
25	120	5443	1.3	CB250	T160L2	16
25	60	5481	0.9	R250	T180M4	17
24	121	5490	0.9	CB215	T160L2	10
24	62	5887	1.4	CB250	T180M4	18
24	62	5812	1.0	CB215	T180M4	11
23	42	5937	1.0	CB215	T200LA6	11
21	70	5973	0.7	R250	T180M4	14
20	145	6579	1.2	CB250	T160L2	16
20	146	6624	0.8	CB215	T160L2	10
20	75	7031	0.9	CB215	T180M4	11
18.9	78	7311	1.2	CB250	T180M4	17
18.8	52	7350	1.2	CB250	T200LA6	17
18.4	53	7393	0.9	CB215	T200LA6	11
18.4	80	7305	0.8	CB215	T180M4	10
17.0	174	6543	0.7	CB215	T160L2	7
16.7	177	7820	0.9	CB250	T160L2	15
16.3	90	8439	1.1	CB250	T180M4	17
15.7	62	8761	1.1	CB250	T200LA6	17
15.7	62	8648	0.8	CB215	T200LA6	11
14.3	207	8401	0.8	CB250	T160L2	12
13.5	109	10216	0.9	CB250	T180M4	17
13.1	112	10100	0.6	CB215	T180M4	10
13.0	75	10329	0.7	CB215	T200LA6	10
12.5	78	10883	0.9	CB250	T200LA6	16
12.3	240	9600	0.7	CB250	T160L2	11
12.3	120	10673	0.8	CB250	T180M4	15
10.8	90	12561	0.8	CB250	T200LA6	16
10.2	290	11248	0.6	CB250	T160L2	11
10.1	145	12893	0.7	CB250	T180M4	15
8.9	109	15217	0.7	CB250	T200LA6	16
8.1	120	15883	0.6	CB250	T200LA6	14

1.7 - *Gearmotors*

n_2 min^{-1}	ir	T2 Nm	FS'		22.0 kW	Ptn kW
420	7	450.2	4.9	R250	T180M2	40
420	7	450.2	3.7	R215	T180M2	26
420	7	445.2	2.3	R180	T180M2	19
294	10	636.0	3.4	R215	T180M2	23
294	10	628.9	1.9	R180	T180M2	17
267	11	699.6	4.4	R250	T180M2	36
211	7	894.3	3.6	R250	T180L4	26
211	7	894.3	2.7	R215	T180L4	19
211	7	884.4	1.7	R180	T180L4	40
196	15	954.0	3.8	R250	T180M2	36
196	15	943.3	2.5	R215	T180M2	15
196	15	921.9	1.4	R180	T180M2	21
148	10	1263	2.4	R215	T180L4	23
148	10	1249	1.3	R180	T180L4	17
147	20	1229	2.8	R250	T180M2	28
147	20	1243	2.0	R215	T180M2	20
139	7	1342	3.0	R250	T200LB6	23
139	7	1343	2.2	R215	T200LB6	36
135	11	1390	3.1	R250	T180L4	36
105	28	1721	1.4	R215	T180M2	18
99	15	1895	2.6	R250	T180L4	36
99	15	1874	1.8	R215	T180L4	15
99	15	1831	1.0	R180	T180L4	21
98	30	1822	2.0	R250	T180M2	26
98	10	1896	1.9	R215	T200LB6	21
89	11	2110	2.4	R250	T200LB6	36
79	37	2142	1.1	CB180	T180M2	11
77	38	2227	2.5	CB250	T180M2	21
74	20	2442	2.0	R250	T180L4	18
74	20	2442	1.4	R215	T180L4	28
74	40	2287	1.7	R250	T180M2	8
74	40	2315	1.0	R215	T180M2	20
74	40	2315	0.7	CB150	T180M2	13
70	42	2431	1.7	CB215	T180M2	13
65	15	2845	2.1	R250	T200LB6	20
65	15	2812	1.4	R215	T200LB6	33
60	49	2731	1.4	R250	T180M2	18
59	50	2787	0.9	R215	T180M2	7
59	50	2859	0.6	CB150	T180M2	12
57	52	3010	2.1	CB250	T180M2	20
57	52	3010	0.9	CB180	T180M2	11
55	53	3068	1.5	CB215	T180M2	13
53	28	3378	0.9	R215	T180L4	17
52	57	3096	0.7	R215	T180M2	11
49	30	3578	1.3	R250	T180L4	25
49	60	3302	1.1	R250	T180M2	17
47	62	3589	1.9	CB250	T180M2	13
47	62	3545	1.4	CB215	T180M2	20
47	62	3545	0.7	CB180	T180M2	10
43	69	3747	0.6	R215	T180M2	11
42	70	3602	0.9	R250	T180M2	14
40	37	4202	0.7	CB180	T180L4	10
39	75	4288	1.2	CB215	T180M2	13
39	75	4234	0.7	CB180	T180M2	10
39	38	4315	1.6	CB250	T180L4	19
38	78	4460	1.6	CB250	T180M2	19
37	79	3951	0.8	R250	T180M2	13
37	40	4486	1.1	R250	T180L4	19
37	40	4486	0.7	R215	T180L4	12
37	80	4516	1.1	CB215	T180M2	12
35	42	4710	1.1	CB215	T180L4	12
33	90	5145	1.5	CB250	T180M2	19
30	49	5357	0.9	R250	T180L4	17
30	98	4902	0.6	R250	T180M2	13
28	52	5832	1.4	CB250	T180L4	18
28	53	5945	0.9	CB215	T180L4	12
27	109	6154	1.3	CB250	T180M2	18
26	112	6243	0.8	CB215	T180M2	11
26	38	6468	1.2	CB250	T200LB6	18
25	60	6473	0.7	R250	T180L4	17
25	120	6518	1.1	CB250	T180M2	16
24	121	6571	0.8	CB215	T180M2	10
24	62	6953	1.2	CB250	T180L4	11
24	62	6865	0.9	CB215	T180L4	18
23	42	7061	0.8	CB215	T200LB6	11
21	70	7056	0.6	R250	T180L4	14
20	145	7874	1.0	CB250	T180M2	16
20	146	7928	0.7	CB215	T180M2	10
20	75	8306	0.7	CB215	T180L4	11
19.0	78	8639	1.0	CB250	T180L4	17

1.7 - Getriebemotoren

n_2 min^{-1}	ir	T2 Nm	FS'		22.0 kW	Ptn kW
18.8	52	8740	1.0	CB250	T200LB6	17
18.5	80	8631	0.7	CB215	T180L4	10
18.4	53	8792	0.7	CB215	T200LB6	11
16.6	177	9361	0.8	CB250	T180M2	15
16.4	90	9969	0.9	CB250	T180L4	17
15.7	62	10418	0.9	CB250	T200LB6	17
15.7	62	10285	0.6	CB215	T200LB6	11
14.2	207	10061	0.7	CB250	T180M2	12
13.6	109	12068	0.8	CB250	T180L4	17
12.5	78	12942	0.8	CB250	T200LB6	16
12.3	120	12609	0.7	CB250	T180L4	15
12.3	240	11491	0.6	CB250	T180M2	11
10.8	90	14938	0.7	CB250	T200LB6	16

1.7 - Motoriduttori

n_2 min^{-1}	ir	T2 Nm	FS'		30.0 kW	Ptn kW
421	7	612.9	3.6	R250	T200LA2	40
421	7	612.9	2.7	R215	T200LA2	26
295	10	865.8	2.5	R215	T200LA2	23
268	11	952.4	3.2	R250	T200LA2	36
209	7	1236	2.6	R250	T200L4	40
209	7	1236	1.9	R215	T200L4	26
196	15	1299	2.8	R250	T200LA2	36
196	15	1284	1.9	R215	T200LA2	21
146	10	1747	1.7	R215	T200L4	23
133	11	1921	2.2	R250	T200L4	36
97	15	2620	1.9	R250	T200L4	36
97	15	2590	1.3	R215	T200L4	21
80	37	2916	0.8	CB180	T200LA2	11
78	38	3031	1.8	CB250	T200LA2	21
70	42	3310	1.3	CB215	T200LA2	13
57	52	4098	1.5	CB250	T200LA2	20
57	52	4098	0.6	CB180	T200LA2	11
56	53	4176	1.1	CB215	T200LA2	13
48	62	4886	1.4	CB250	T200LA2	20
48	62	4825	1.0	CB215	T200LA2	13
39	75	5837	0.9	CB215	T200LA2	13
38	38	5966	1.2	CB250	T200L4	19
38	78	6070	1.2	CB250	T200LA2	19
37	80	6149	0.8	CB215	T200LA2	12
35	42	6511	0.8	CB215	T200L4	12
33	90	7005	1.1	CB250	T200LA2	19
28	52	8060	1.0	CB250	T200L4	18
28	53	8216	0.7	CB215	T200L4	12
27	109	8377	1.0	CB250	T200LA2	18
26	112	8500	0.6	CB215	T200LA2	11
25	120	8873	0.8	CB250	T200LA2	16
24	62	9611	0.9	CB250	T200L4	18
24	62	9489	0.6	CB215	T200L4	11
20	145	10721	0.7	CB250	T200LA2	16
18.7	78	11938	0.7	CB250	T200L4	17
16.2	90	13777	0.7	CB250	T200L4	17

1.7 - *Gearmotors*

n_2 min^{-1}	ir	T2 Nm	FS'		37.0 kW	Ptn kW
421	7	754.6	2.9	R250	VL2200L22	40
421	7	754.6	2.2	R215	VL2200L22	26
420	7	757.2	2.9	R250	T200LB2	40
420	7	757.2	2.2	R215	T200LB2	26
295	10	1066	2.0	R215	VL2200L22	23
294	10	1070	2.0	R215	T200LB2	23
268	11	1173	2.6	R250	VL2200L22	36
267	11	1177	2.6	R250	T200LB2	36
211	7	1509	2.1	R250	VL2225S4	40
211	7	1509	1.6	R215	VL2225S4	26
197	15	1599	2.3	R250	VL2200L22	36
197	15	1581	1.5	R215	VL2200L22	21
196	15	1605	2.2	R250	T200LB2	36
196	15	1587	1.5	R215	T200LB2	21
148	10	2132	1.4	R215	VL2225S4	23
134	11	2345	1.8	R250	VL2225S4	36
98	15	3198	1.6	R250	VL2225S4	36
98	15	3162	1.0	R215	VL2225S4	21
80	37	3590	0.7	CB180	VL2200L22	11
79	37	3602	0.7	CB180	T200LB2	11
78	38	3732	1.5	CB250	VL2200L22	21
77	38	3745	1.5	CB250	T200LB2	21
70	42	4075	1.0	CB215	VL2200L22	13
70	42	4089	1.0	CB215	T200LB2	13
57	52	5045	1.3	CB250	VL2200L22	20
57	52	5062	1.3	CB250	T200LB2	20
56	53	5142	0.9	CB215	VL2200L22	13
55	53	5160	0.9	CB215	T200LB2	13
48	62	6015	1.1	CB250	VL2200L22	20
48	62	5941	0.8	CB215	VL2200L22	13
47	62	6036	1.1	CB250	T200LB2	20
47	62	5961	0.8	CB215	T200LB2	13
39	75	7187	0.7	CB215	VL2200L22	13
39	75	7211	0.7	CB215	T200LB2	13
39	38	7282	1.0	CB250	VL2225S4	19
38	78	7474	1.0	CB250	VL2200L22	19
38	78	7500	1.0	CB250	T200LB2	19
37	80	7569	0.6	CB215	VL2200L22	12
37	80	7596	0.6	CB215	T200LB2	12
35	42	7948	0.7	CB215	VL2225S4	12
33	90	8624	0.9	CB250	VL2200L22	19
33	90	8653	0.9	CB250	T200LB2	19
28	52	9839	0.8	CB250	VL2225S4	18
27	109	10316	0.8	CB250	VL2200L22	18
27	109	10350	0.8	CB250	T200LB2	18
26	38	10824	0.7	CB250	VL2250M6	18
25	120	10925	0.7	CB250	VL2200L22	16
25	120	10961	0.7	CB250	T200LB2	16
24	62	11734	0.7	CB250	VL2225S4	18
18.9	78	14575	0.6	CB250	VL2225S4	17
18.9	52	14621	0.6	CB250	VL2250M6	17

1.7 - Getriebemotoren

n_2 min^{-1}	ir	T2 Nm	FS'		45.0 kW	Ptn kW
423	7	915	2.4	R250	VL2225M2	40
423	7	915	1.8	R215	VL2225M2	26
296	10	1292	1.7	R215	VL2225M2	23
269	11	1421	2.1	R250	VL2225M2	36
211	7	1836	1.7	R250	VL2225M4	40
211	7	1836	1.3	R215	VL2225M4	26
197	15	1938	1.9	R250	VL2225M2	36
197	15	1917	1.3	R215	VL2225M2	21
148	10	2593	1.2	R215	VL2225M4	23
134	11	2852	1.5	R250	VL2225M4	36
98	15	3890	1.3	R250	VL2225M4	36
98	15	3846	0.9	R215	VL2225M4	21
78	38	4524	1.2	CB250	VL2225M2	21
70	42	4939	0.9	CB215	VL2225M2	13
57	52	6116	1.0	CB250	VL2225M2	20
56	53	6233	0.7	CB215	VL2225M2	13
48	62	7292	0.9	CB250	VL2225M2	20
48	62	7201	0.7	CB215	VL2225M2	13
39	38	8856	0.8	CB250	VL2225M4	19
38	78	9059	0.8	CB250	VL2225M2	19
33	90	10453	0.7	CB250	VL2225M2	19
28	52	11967	0.7	CB250	VL2225M4	18
27	109	12500	0.6	CB250	VL2225M2	18
26	38	13164	0.6	CB250	VL2280S6	18

1.7 - Motoriduttori

n_2 min^{-1}	ir	T2 Nm	FS'		55.0 kW	Ptn kW
78	38	5511	1.0	CB250	VL2250M2	21
57	52	7448	0.9	CB250	VL2250M2	20
48	62	8882	0.8	CB250	VL2250M2	20
39	38	10788	0.7	CB250	VL2250M4	19
38	78	11035	0.7	CB250	VL2250M2	19

1.7 - *Gearmotors*

n_2 min^{-1}	ir	T2 Nm	FS'		75.0 kW	Ptn kW
78	38	7502	0.7	CB250	VL2280S2	21
57	52	10141	0.6	CB250	VL2280S2	20

1.7 - Getriebemotoren

n_2 min^{-1}	ir	T2 Nm	FS'			Ptn kW

N.B.
Per i riduttori per i quali **Ptn < Potenza motore elettrico** è opportuno effettuare la verifica della potenza limite termico secondo le indicazioni riportate nel par. 1.7-A

NOTE.
For the gearboxes with **Ptn < Power electric motor** *it is aslo necessary to obey the therminal capacity like shown on chapter 1.7-A.*

HINWEIS.
Bei den mit **Ptn < Leistung Motor** , ist außerdem die thermische Leistungsgrenze zu beachten (s. Kap. 1.7-A).

1.8 Dimensioni — *1.8 Dimensions* — 1.8 Abmessungen

S

RI

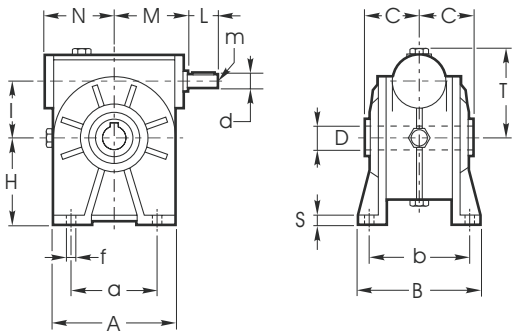

RMI

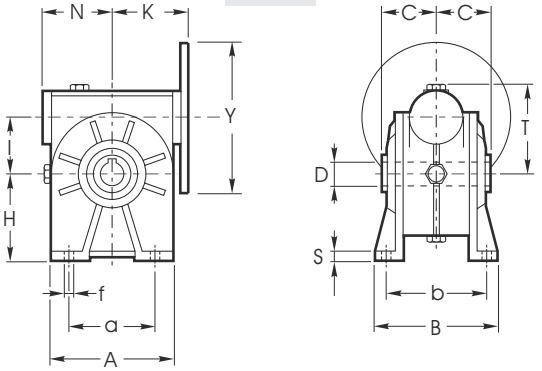

I

RI

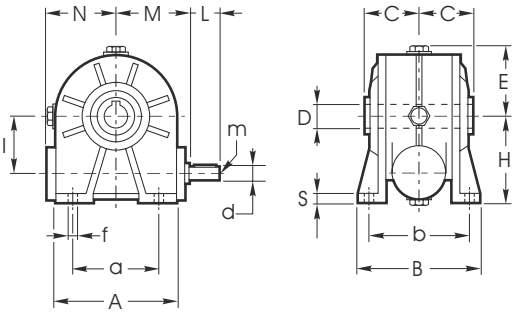

RMI

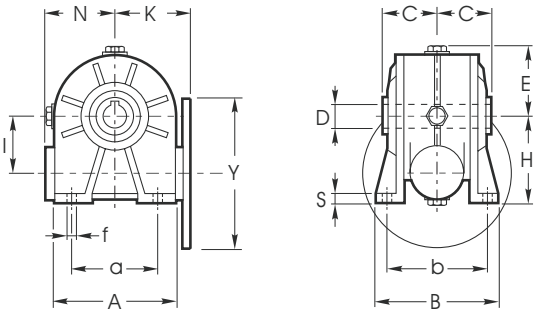

D

RI

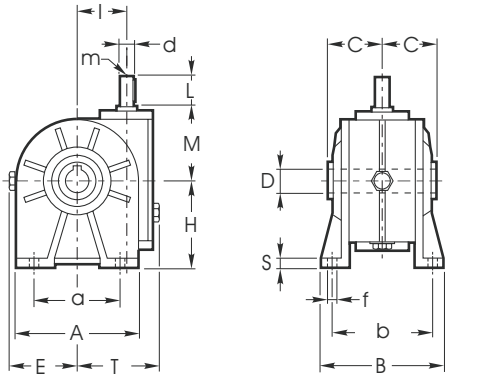

RMI

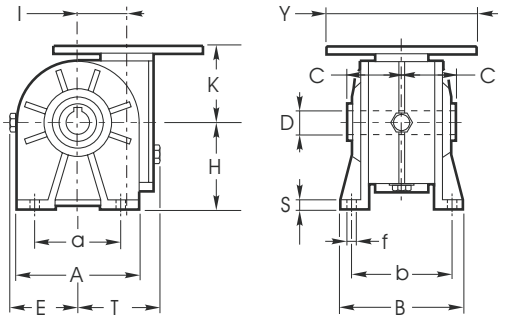

Dimensioni generali / *Dimensions* / Allgemeine Abmessungen												
Dimensions		**28**	**40**	**50**	**63**	**70**	**85**	**110**	**130**	**150**	**180**	**215**	**250**
C		30	41	49	60	60	61	77,5	90	105	120	140	160
D	Standard	14	19	24	25	28	32	42	48	55	65	90	110
	Optional	-	18	25	-	-	35	-	-	-	-	-	-
tollerance D		H7	H7	H7	H7	H7	H7	H7	H7	H7	H7	H7	H7
I		28	40	50	63	70	85	110	130	150	180	215	250
N		41	52	59,5	71,5	92	111	142	161,5	189	232	275	329
E		40	59	69	81	87	105	135	154	178	210	249	289
T		49	66	80	99	108	135	170	195	224	265	332	383

S - I - D - Versioni / *Versions* / Ausführungen												
Versions S - I - D	**28**	**40**	**50**	**63**	**70**	**85**	**110**	**130**	**150**	**180**	**215**	**250**
A	67	100	120	140	158	193	250	286	336	400	440	500
a	52	70	85	95	120	140	200	235	260	310	340	400
B	78	102	119	136	140	168	200	230	250	320	380	439
b	66 $^{+2}_{-6}$	84 ±3	99 ±3	111 $^{0}_{+5}$	116 $^{+2}_{-8}$	140	162	190	210	260	320	385
f	5,5	7	9	11	11	13	14	15	19	22	26	33
H	52	71	85	100	115	135	172	200	230	265	335	430
H1	-	-	-	-	-	-	-	-	-	-	260	300
S	6	8	10	11	13	15	17	19	20	22	25	30

1.8 Dimensioni

1.8 Dimensions

1.8 Abmessungen

RMI - Versione Entrata / *Input version* / Antriebausführung													
RMI		**28**	**40**	**50**	**63**	**70**	**85**	**110**	**130**	**150**	**180**	**215**	**250**
IEC	**Y**	**K**	**K**	**K**	**K**	**K**	**K**	**K**	**K**	**K**	**K**	**K**	**K**
56 B5	120	49	70.5	-	-	-	-	-	-	-	-	-	-
56 B14	80	49•	-	-	-	-	-	-	-	-	-	-	-
63 B5	140	-	70.5	80.5	-	-	-	-	-	-	-	-	-
63B14	90	49	70.5•	80.5•	-	-	-	-	-	-	-	-	-
71 B5	160	-	70.5	80.5	94.5	100	-	-	-	-	-	-	-
71B14	105	-	70.5	80.5•	94.5•	100•	-	-	-	-	-	-	-
80 B5	200	-	-	80.5	94.5	100	118	-	-	-	-	-	-
80 B14	120	-	-	80.5	94.5	100	118•	-	-	-	-	-	-
90 B5	200	-	-	-	94.5	100	118	145	-	-	-	-	-
90 B14	140	-	-	-	94.5	100	120	-	-	-	-	-	-
100-112 B5	250	-	-	-	-	-	120	145	163	189	-	-	-
100-112 B14	160	-	-	-	-	100	120	146	-	-	-	-	-
132 B5	300	-	-	-	-	-	-	145.5	163	189	234	285	335
132 B14	200	-	-	-	-	-	-	-	-	-	-	-	-
160 B5	350	-	-	-	-	-	-	-	-	196	234	285	335
180 B5	350	-	-	-	-	-	-	-	-	-	234	285	335
200 B5	400	-	-	-	-	-	-	-	-	-	-	*	*
225 B5	450	-	-	-	-	-	-	-	-	-	-	*	*

(•) Vedi designazione 19 - PMT

(•) See designation 19 - PMT

(•) Siehe Beschreibung 19 - PMT

* A richiesta / On request / Auf Anfrage

RI - Versione Entrata / *Input version* / Antriebausführung												
RI	**28**	**40**	**50**	**63**	**70**	**85**	**110**	**130**	**150**	**180**	**215**	**250**
d	9	11	14	18	19	24	28	38	42	48	48	55
tollerance d	j6	j6	j6	j6	j6	j6	j6	j6	j6	j6	m6	m6
L	20	22	30	45	40	50	60	80	100	110	110	110
m	M4	M5	M6	M6	M8	M8	M8	M10	M12	M14	M16	M16
M	47	64	74	96	97	115	146	166	193	235	289,5	334

PARTICOLARE CORPO - 215 - 250

DETAIL OF THE GEARCASE - 215 - 250

DETAIL DES GEHÄUSES - 215 - 250

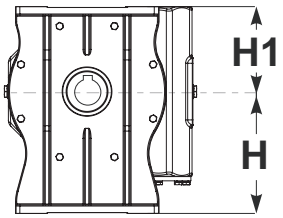

215
250

1.8 Dimensioni — *1.8 Dimensions* — 1.8 Abmessungen

P

RI 28

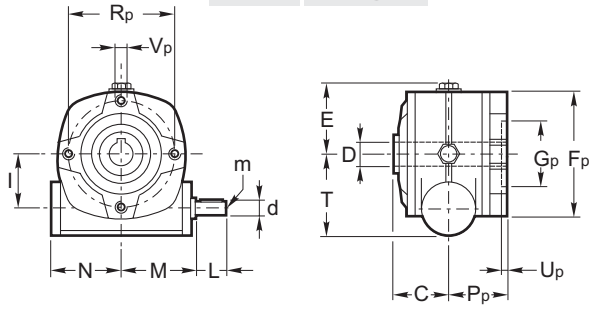

RMI 28

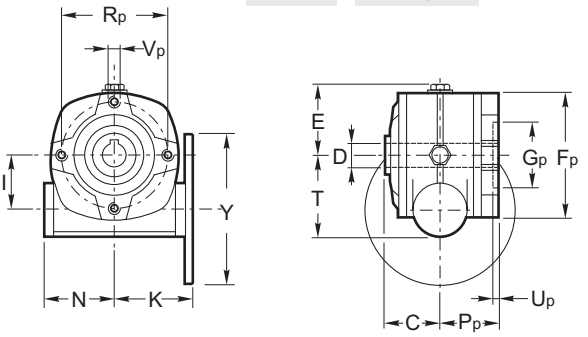

P
PP

RI 40...250

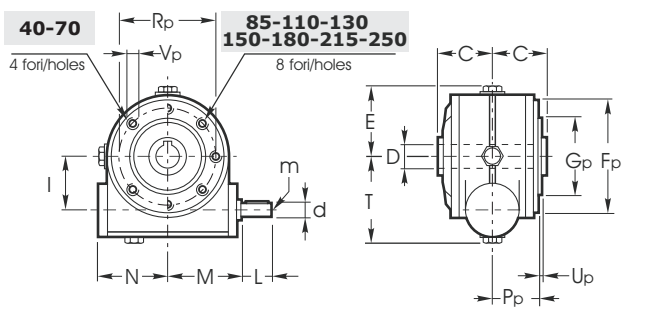

RMI 40...250

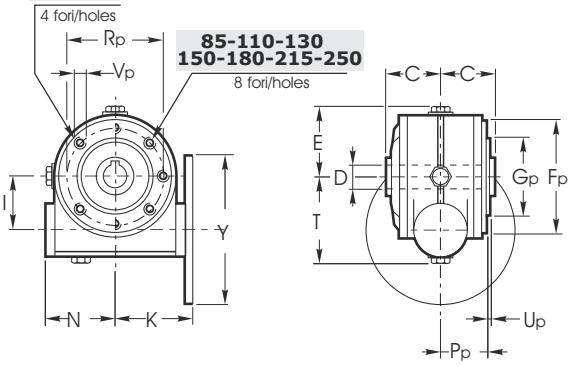

FL
F.

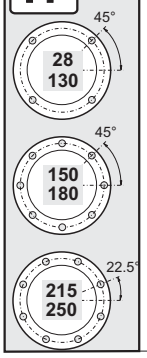

RI

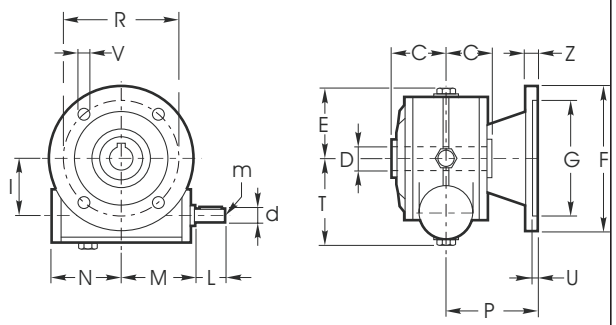

RMI

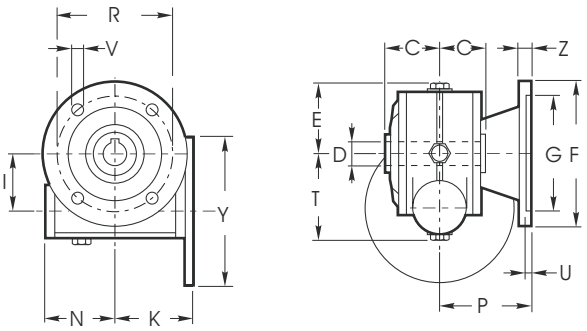

Dimensioni generali / *Dimensions* / Allgemeine Abmessungen												
Dimensions		**28**	**40**	**50**	**63**	**70**	**85**	**110**	**130**	**150**	**180**	**215**	**250**
C		30	41	49	60	60	61	77,5	90	105	120	140	160
D	Standard	14	19	24	25	28	32	42	48	55	65	90	110
	Optional	-	18	25	-	-	35	-	-	-	-	-	-
tollerance D		H7	H7	H7	H7	H7	H7	H7	H7	H7	H7	H7	H7
I		28	40	50	63	70	85	110	130	150	180	215	250
N		41	52	59,5	71,5	92	111	142	161,5	189	232	275	329
E		40	59	69	81	87	105	135	154	178	210	249	289
T		49	66	80	99	108	135	170	195	224	265	332	383

P - PP - Versioni / *Versions* / Ausführungen												
Versions - P - PP	**28**	**40**	**50**	**63**	**70**	**85**	**110**	**130**	**150**	**180**	**215**	**250**
Fp	67	95	105	105	120	144	200	242	250	300	348	450
Gp	42	60	70	70	80	110	130	180	180	230	250	350
tollerance Gp	H8	e8	e8	e8	e8	e8	e8	e8	e8	e8	e8	e8
Pp	36	38	49	57,5	57	56,5	74	87	102	117	135	155
Rp	56	83	85	85	100	130	165	215	215	265	300	400
Up	7	2	2,5	3,5	5	3,5	3	5	5	5	5	5
Vp	M6	M6	M8	M8	M8	M10	M12	M12	M14	M16	M16	M16

1.8 Dimensioni

1.8 Dimensions

1.8 Abmessungen

FL - Versioni / *Versions* / Ausführungen												
Versions FL	**28**	**40**	**50**	**63**	**70**	**85**	**110**	**130**	**150**	**180**	**215**	**250**
	FL	**FL°**	**FL°**	**FL°**	**FL°**	**FL**	**FL**	**FL**	**FL**	**FL**	**FL**	**FL**
F	70	140	160	180	200	200	250	300	350	400	550	550
G	40	95	110	115	130	130	180	230	250	300	450	450
tollerance G	H8	H8	H8	H8	H8	H8	H8	H8	H8	H8	H8	H8
P	49	82	91,5	116	111	100	150	150	160	180	240	245
R	56	115	130	150	165	165^{0}_{+11}	215	265	300	350	500	500
U	5	5	5	5	5	5	5	5	6	6,5	7	6
V	6	8,5	10	11	13	13	15	15	19	22	18	22
Z	5	9	10	11	11	12	16	18	18	22	25	25

F1-F2-F3-F4 - Versioni / *Versions* / Ausführungen																					
Versions F1-F2-F3-F4	**28**		**40**		**50**				**63**			**70**			**85**			**110**			**180**
	F1	**F2**	**F1**	**F2**	**F1**	**F2**	**F3**	**F4**	**F1°**	**F2°**	**F3°**	**F1°**	**F2°**	**F3**	**F1**	**F2**	**F3**	**F1**	**F2**	**F3**	**F2**
F	80	95	106	120	125	125	140	125	175	200	160	175	175	160	200	210	160	200	270	270	400
G	50	70	60	80	70	70	95	70	115	130	110	115	115	110	130	152	110	130	170	170	300
tollerance G	H8	H8	H8	H8	H8	H8	H8	H8	H8	H8	H8	H8	H8	H8	H8	H8	H8	H8	H8	H8	H8
P	53	72	69	62	93	73	75	85	86	102	82	116	85	101	141	119,5	91	115	131,5	178	150
R	62^{0}_{+6}	85	87	100	90^{0}_{+9}	100	115	$90^{0}_{+4.5}$	150	165	130	150	150	130	165	176	130	165	230	230	350
U	4	4	5	5	5	4	4	5	5	5	5	5	5	6	6	5	5	5	10	10	6,5
V	6	6,5	8,5	9	10,5	9	9	10,5	11	13	10	11	11	11	13	13	11,5	13	13,5	13,5	22
Z	7	8	9	9	10	9	9	11	11	11	11	10	10	11	12	14	10	12	18	18	22

La versione contrassegnata con il simbolo (°) è ottenuta applicando una flangia modulare sulla flangia pendolare della versione P-PP.

Version that is marked with (°) is obtained by applying a modular flange onto the shaft-mounted flange of the P-PP version.

Die mit (°) gekennzeichneten Version erhält man, indem ein Modulflansch an den Flansch mit Drehmomentstütze der P-PP Version befestigt wird.

RMI - Versione Entrata / *Input version* / Antriebausführung													
RMI		**28**	**40**	**50**	**63**	**70**	**85**	**110**	**130**	**150**	**180**	**215**	**250**
IEC	**Y**	**K**	**K**	**K**	**K**	**K**	**K**	**K**	**K**	**K**	**K**	**K**	**K**
56 B5	120	49	70.5	-	-	-	-	-	-	-	-	-	-
56 B14	80	49•	-	-	-	-	-	-	-	-	-	-	-
63 B5	140	-	70.5	80.5	-	-	-	-	-	-	-	-	-
63B14	90	49	70.5•	80.5•	-	-	-	-	-	-	-	-	-
71 B5	160	-	70.5	80.5	94.5	100	-	-	-	-	-	-	-
71B14	105	-	70.5	80.5•	94.5•	100•	-	-	-	-	-	-	-
80 B5	200	-	-	80.5	94.5	100	118	-	-	-	-	-	-
80 B14	120	-	-	80.5	94.5	100	118•	-	-	-	-	-	-
90 B5	200	-	-	-	94.5	100	118	145	-	-	-	-	-
90 B14	140	-	-	-	94.5	100	120	-	-	-	-	-	-
100-112 B5	250	-	-	-	-	-	120	145	163	189	-	-	-
100-112 B14	160	-	-	-	-	100	120	146	-	-	-	-	-
132 B5	300	-	-	-	-	-	-	145.5	163	189	234	285	335
132 B14	200	-	-	-	-	-	-	-	-	-	-	-	-
160 B5	350	-	-	-	-	-	-	-	-	196	234	285	335
180 B5	350	-	-	-	-	-	-	-	-	-	234	285	335
200 B5	400	-	-	-	-	-	-	-	-	-	-	*	*
225 B5	450	-	-	-	-	-	-	-	-	-	-	*	*

(•) Vedi designazione 19 - PMT

(•) See designation 19 - PMT

(•) Siehe Beschreibung 19 - PMT

* A richiesta / On request / Auf Anfrage

RI - Versione Entrata / *Input version* / Antriebausführung												
RI	**28**	**40**	**50**	**63**	**70**	**85**	**110**	**130**	**150**	**180**	**215**	**250**
d	9	11	14	18	19	24	28	38	42	48	48	55
tollerance d	j6	j6	j6	j6	j6	j6	j6	j6	j6	j6	m6	m6
L	20	22	30	45	40	50	60	80	100	110	110	110
m	M4	M5	M6	M6	M8	M8	M8	M10	M12	M14	M16	M16
M	47	64	74	96	97	115	146	166	193	235	289,5	334

1.8 Dimensioni — *1.8 Dimensions* — 1.8 Abmessungen

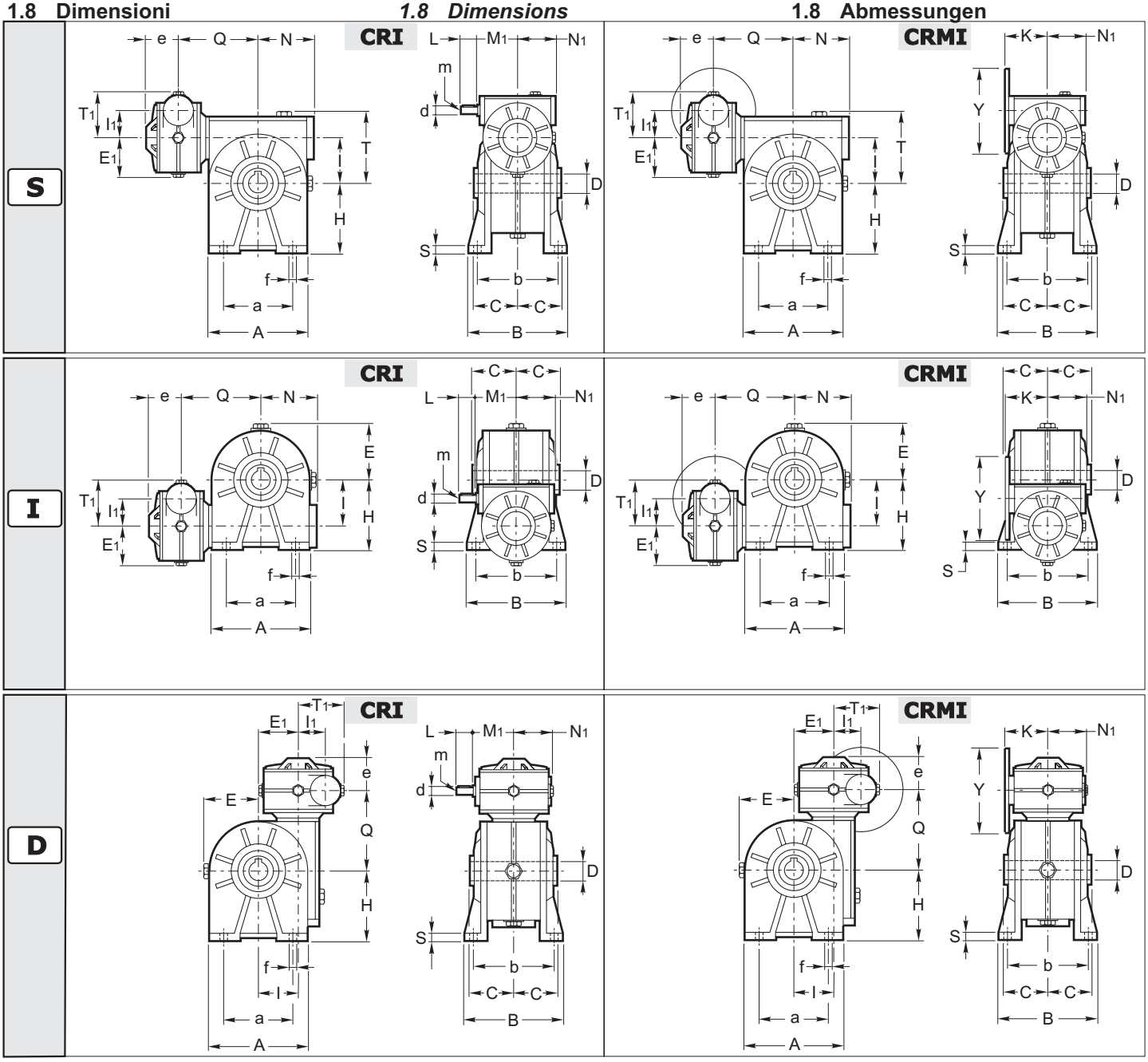

Dimensioni generali / *Dimensions* / Allgemeine Abmessungen																												
Dimensions	28 28	28 40	40 40	28 50	40 50	28 63	40 63	28 70	40 70	50 70	63 70	40 85	50 85	63 85	70 85	50 110	63 110	70 110	85 110	63 130	70 130	85 130	85 150	110 150	85 180	110 180	130 180	110 215	130 250
C	30	41	41	49	49	60	60	60	60	60	60	61	61	61	61	77,5	77,5	77,5	77,5	90	90	90	105	105	120	120	120	140	160
D (standard)	14	19	19	24	24	25	25	28	28	28	28	32	32	32	32	42	42	42	42	48	48	48	55	55	65	65	65	90	110
D (Optional)	-	18	18	25	25	-	-	-	-	-	-	35	35	35	35	-	-	-	-	-	-	-	-	-	-	-	-	-	-
tollerance D	H7	H7	H7	H7	H7	H7	H7	H7	H7	H7	H7	H7	H7	H7	H7	H7	H7	H7	H7	H7	H7	H7	H7	H7	H7	H7	H7	H7	H7
I1	28	28	40	28	40	28	40	28	40	50	63	40	50	63	70	50	63	70	85	63	70	85	85	110	85	110	130	110	130
I	28	40	40	50	50	63	63	70	70	70	70	85	85	85	85	110	110	110	110	130	130	130	150	150	180	180	180	215	250
N1	41	41	52	41	52	41	52	41	52	59,5	71,5	52	59,5	71,5	92	59,5	71,5	92	111	71,5	92	111	111	142	111	142	159	142	159
N	44,5	61,5	61,5	72,5	72,5	84	84	92	92	92	92	111	111	111	111	142	142	142	142	161,5	161,5	161,5	189	189	232	232	232	275	329
E1	40	40	59	40	59	40	59	40	59	69	81	59	69	81	87	69	81	87	105	81	87	105	105	135	105	135	150	135	150
E	40	59	59	69	69	81	81	87	87	87	87	105	105	105	105	135	135	135	135	154	154	154	178	178	210	210	210	249	289
e	35	35	49	35	49	35	49	35	49	59	69	49	59	69	68	59	69	68	71	69	68	71	71	92	71	92	102	92	102
Q	90	109	153	115,5	163	135,5	146	140,5	151	149	182	202	173	198	165	237,5	228	191	195	265	214	213	240	254	283	296	306	435	485
T1	49	49	66	49	66	49	66	49	66	80	99	66	80	99	108	80	99	108	135	99	108	135	135	170	135	170	200	170	200
T	49	66	66	80	80	99	99	108	108	108	108	135	135	135	135	170	170	170	170	195	195	195	224	224	265	265	265	332	383

Riduttori con accoppiamento eseguito con kit di montaggio, vedi pag.B95.

Gearboxes assembled with combination kit, see also page B95.

Getriebe angebaut mit kombinationskit, siehe auch Seite B95.

1.8 Dimensioni — *1.8 Dimensions* — 1.8 Abmessungen

Dimensioni generali / *Dimensions* / Allgemeine Abmessungen

Versions S - I - D	28 28	28 40	40 40	28 50	40 50	28 63	40 63	28 70	40 70	50 70	63 70	40 85	50 85	63 85	70 85	50 110	63 110	70 110	85 110	63 130	70 130	85 130	85 150	110 150	85 180	110 180	130 180	110 215	130 250
A	67	100	100	120	120	140	140	158	158	158	158	193	193	193	193	250	250	250	250	286	286	286	336	336	400	400	400	440	500
a	52	70	70	85	85	95	95	120	120	120	120	140	140	140	140	200	200	200	200	235	235	235	260	260	310	310	310	340	400
B	78	102	102	119	119	136	136	140	140	140	140	168	168	168	168	200	200	200	200	230	230	230	250	250	320	320	320	380	439
b	66	84	84	99	99	111	111	116	116	116	116	140	140	140	140	162	162	162	162	190	190	190	210	210	260	260	260	320	385
	$^{+2}_{-6}$	±3		±3		$^{0}_{+5}$		$^{+2}_{-8}$				—																	
f	5,5	7	7	9	9	11	11	11	11	11	11	13	13	13	13	14	14	14	14	15	15	15	19	19	22	22	22	26	33
H	52	71	71	85	85	100	100	115	115	115	115	135	135	135	135	172	172	172	172	200	200	200	230	230	265	265	265	335	430
H1	-	-	-	-	-	-	-	-	-	-	-	-	-	-	-	-	-	-	-	-	-	-	-	-	-	-	-	260	300
S	6	8	8	10	10	11	11	13	13	13	13	15	15	15	15	17	17	17	17	19	19	19	20	20	22	22	22	25	30

B

PARTICOLARE CORPO - 215 - 250 — ***DETAIL OF THE GEARCASE - 215 - 250*** — **DETAIL DES GEHÄUSES - 215 - 250**

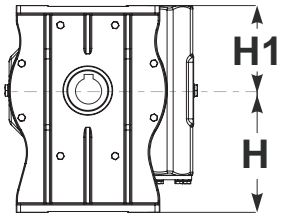

215
250

CRMI - Versione Entrata / *Input version* / Antriebausführung

CRMI		28/...	40/...	50/...	63/...	70/...	85/...	110/...	130/...
IEC	**Y**	**K**	**K**	**K**	**K**	**K**	**K**	**K**	**K**
56 B5	120	49	70.5	-	-	-	-	-	-
56 B14	80	49•	-	-	-	-	-	-	-
63 B5	140	-	70.5	80.5	-	-	-	-	-
63B14	90	49	70.5•	80.5•	-	-	-	-	-
71 B5	160	-	70.5	80.5	94.5	100	-	-	-
71B14	105	-	70.5	80.5•	94.5•	100•	-	-	-
80 B5	200	-	-	80.5	94.5	100	118	-	-
80 B14	120	-	-	80.5	94.5	100	118•	-	-
90 B5	200	-	-	-	94.5	100	118	145	-
90 B14	140	-	-	-	94.5	100	120	-	-
100-112 B5	250	-	-	-	-	-	120	145	163
100-112 B14	160	-	-	-	-	100	120	146	-
132 B5	300	-	-	-	-	-	-	145.5	163
132 B14	200	-	-	-	-	-	-	-	-
160 B5	350	-	-	-	-	-	-	-	-
180 B5	350	-	-	-	-	-	-	-	-
200 B5	400	-	-	-	-	-	-	-	-
225 B5	450	-	-	-	-	-	-	-	-

(•) Vedi designazione 19 - PMT — *(•) See designation 19 - PMT* — (•) Siehe Beschreibung 19 - PMT

CRI - Versione Entrata / *Input version* / Antriebausführung

CRI	28/...	40/...	50/...	63/...	70/...	85/...	110/...	130/...
d	9	11	14	18	19	24	28	38
tollerance d	j6	j6	j6	j6	j6	j6	j6	j6
L	20	22	30	45	40	50	60	80
m	M4	M5	M6	M6	M8	M8	M8	M10
M1	47	64	74	96	97	115	146	166

1.8 Dimensioni — *1.8 Dimensions* — 1.8 Abmessungen

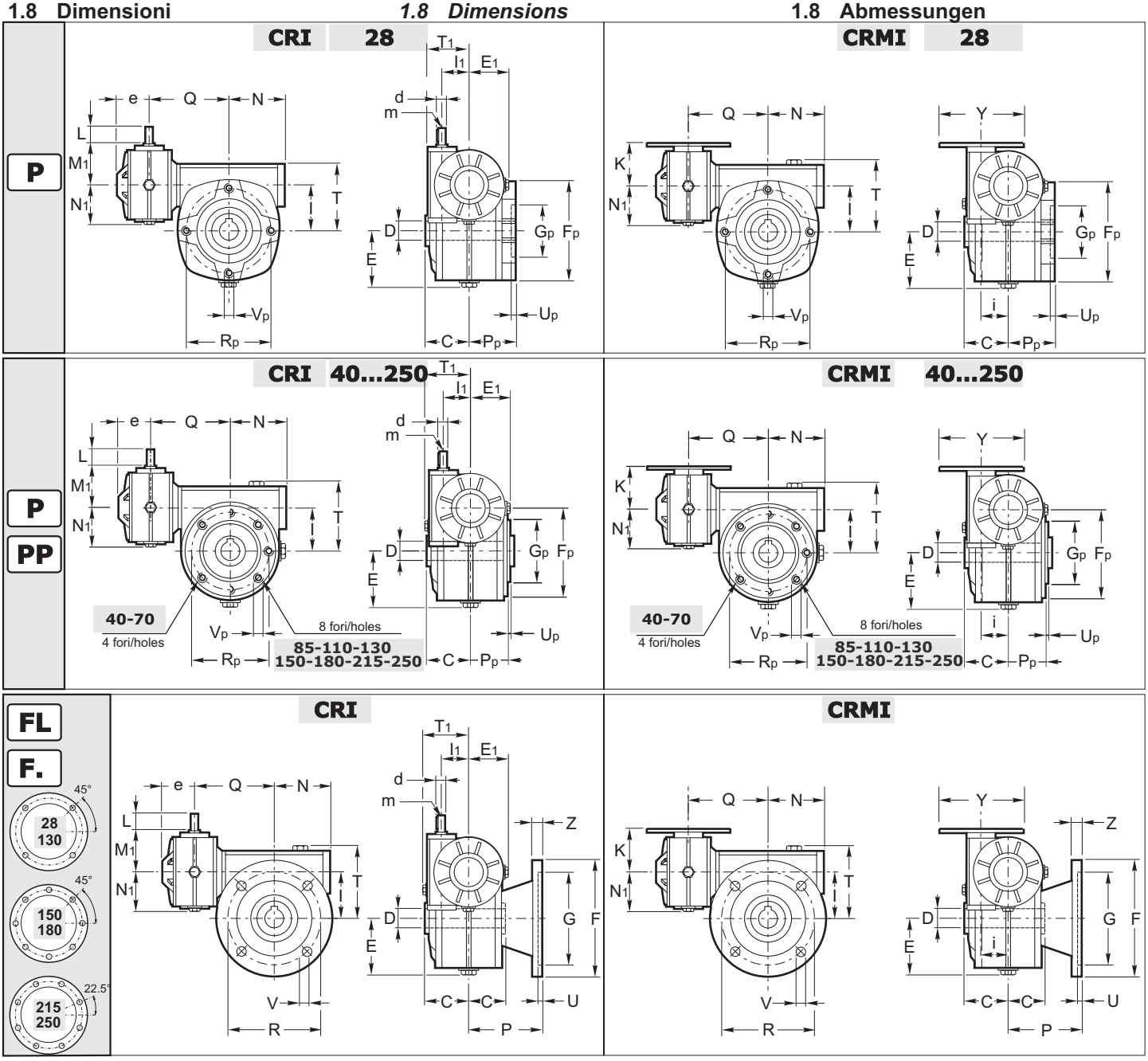

Dimensioni generali / *Dimensions* / Allgemeine Abmessungen																												
Dimensions	28 28	28 40	40 40	28 50	40 50	28 63	40 63	28 70	40 70	50 70	63 70	40 85	50 85	63 85	70 85	50 110	63 110	70 110	85 110	63 130	70 130	85 130	85 150	110 150	85 180	110 180	130 180	110 215	130 250
C	30	41	41	49	49	60	60	60	60	60	60	61	61	61	61	77,5	77,5	77,5	77,5	90	90	90	105	105	120	120	120	140	160
D (standard)	14	19	19	24	24	25	25	28	28	28	28	32	32	32	32	42	42	42	42	48	48	48	55	55	65	65	65	90	110
D (Optional)	-	18	18	25	25	-	-	-	-	-	-	35	35	35	35	-	-	-	-	-	-	-	-	-	-	-	-	-	-
tollerance D	H7	H7	H7	H7	H7	H7	H7	H7	H7	H7	H7	H7	H7	H7	H7	H7	H7	H7	H7	H7	H7	H7	H7	H7	H7	H7	H7	H7	H7
I1	28	28	40	28	40	28	40	28	40	50	63	40	50	63	70	50	63	70	85	63	70	85	85	110	85	110	130	110	130
I	28	40	40	50	50	63	63	70	70	70	70	85	85	85	85	110	110	110	110	130	130	130	150	150	180	180	180	215	250
N1	41	41	52	41	52	41	52	41	52	59,5	71,5	52	59,5	71,5	92	59,5	71,5	92	111	71,5	92	111	111	142	111	142	159	142	159
N	44,5	61,5	61,5	72,5	72,5	84	84	92	92	92	92	111	111	111	111	142	142	142	142	161,5	161,5	161,5	189	189	232	232	232	275	329
E1	40	40	59	40	59	40	59	40	59	69	81	59	69	81	87	69	81	87	105	81	87	105	105	135	105	135	150	135	150
E	40	59	59	69	69	81	81	87	87	87	87	105	105	105	105	135	135	135	135	154	154	154	178	178	210	210	210	249	289
e	35	35	49	35	49	35	49	35	49	59	69	49	59	69	68	59	69	68	71	69	68	71	71	92	71	92	102	92	102
Q	90	109	153	115,5	163	135,5	146	140,5	151	149	182	202	173	198	165	237,5	228	191	195	265	214	213	240	254	283	296	306	435	485
T1	49	49	66	49	66	49	66	49	66	80	99	66	80	99	108	80	99	108	135	99	108	135	135	170	135	170	200	170	200
T	49	66	66	80	80	99	99	108	108	108	108	135	135	135	135	170	170	170	170	195	195	195	224	224	265	265	265	332	383

Riduttori con accoppiamento eseguito con kit di montaggio, vedi pag.B95.

Gearboxes assembled with combination kit, see also page B95.

Getriebe angebaut mit kombinationskit, siehe auch Seite B95.

1.8 Dimensioni

1.8 Dimensions

1.8 Abmessungen

P - PP - Versioni / *Versions* / Ausführungen												
Versions - P - PP	**.../28**	**.../40**	**.../50**	**.../63**	**.../70**	**.../85**	**.../110**	**.../130**	**.../150**	**.../180**	**.../215**	**.../250**
Fp	67	95	105	105	120	144	200	242	250	300	348	450
Gp	42	60	70	70	80	110	130	180	180	230	250	350
tollerance Gp	H8	e8	e8	e8	e8	e8	e8	e8	e8	e8	e8	e8
Pp	36	38	49	57,5	57	56,5	74	87	102	117	135	155
Rp	56	83	85	85	100	130	165	215	215	265	300	400
Up	7	2	2,5	3,5	5	3,5	3	5	5	5	5	5
Vp	M6	M6	M8	M8	M8	M10	M12	M12	M14	M16	M16	M16

B

FL - Versioni / *Versions* / Ausführungen												
Versions FL	**.../28**	**.../40**	**.../50**	**.../63**	**.../70**	**.../85**	**.../110**	**.../130**	**.../150**	**.../180**	**.../215**	**.../250**
	FL	**FL°**	**FL°**	**FL°**	**FL°**	**FL**	**FL**	**FL**	**FL**	**FL**	**FL**	**FL**
F	70	140	160	180	200	200	250	300	350	400	550	550
G	40	95	110	115	130	130	180	230	250	300	450	450
tollerance G	H8	H8	H8	H8	H8	H8	H8	H8	H8	H8	H8	H8
P	49	82	91,5	116	111	100	150	150	160	180	240	245
R	56	115	130	150	165	165^{0}_{+11}	215	265	300	350	500	500
U	5	5	5	5	5	5	5	5	6	6,5	7	6
V	6	8,5	10	11	13	13	15	15	19	22	18	22
Z	5	9	10	11	11	12	16	18	18	22	25	25

F1-F2-F3-F4 - Versioni / *Versions* / Ausführungen																					
Versions F1-F2-F3-F4	**.../28**		**.../40**		**.../50**				**.../63**			**.../70**			**.../85**			**.../110**			**.../180**
	F1	**F2**	**F1**	**F2**	**F1**	**F2**	**F3**	**F4**	**F1°**	**F2°**	**F3°**	**F1°**	**F2°**	**F3**	**F1**	**F2**	**F3**	**F1**	**F2**	**F3**	**F2**
F	80	95	106	120	125	125	140	125	175	200	160	175	175	160	200	210	160	200	270	270	400
G	50	70	60	80	70	70	95	70	115	130	110	115	115	110	130	152	110	130	170	170	300
tollerance G	H8	H8	H8	H8	H8	H8	H8	H8	H8	H8	H8	H8	H8	H8	H8	H8	H8	H8	H8	H8	H8
P	53	72	69	62	93	73	75	85	86	102	82	116	85	101	141	119,5	91	115	131,5	178	150
R	62^{0}_{+6}	85	87	100	90^{0}_{+9}	100	115	$90^{0}_{+4.5}$	150	165	130	150	150	130	165	176	130	165	230	230	350
U	4	4	5	5	5	4	4	5	5	5	5	5	5	6	6	5	5	5	10	10	6,5
V	6	6,5	8,5	9	10,5	9	9	10,5	11	13	10	11	11	11	13	13	11,5	13	13,5	13,5	22
Z	7	8	9	9	10	9	9	11	11	11	11	10	10	11	12	14	10	12	18	18	22

La versione contrassegnata con il simbolo (°) è ottenuta applicando una flangia modulare sulla flangia pendolare della versione P-PP.

Version that is marked with (°) is obtained by applying a modular flange onto the shaft-mounted flange of the P-PP version.

Die mit (°) gekennzeichneten Version erhält man, indem ein Modulflansch an den Flansch mit Drehmomentstütze der P-PP Version befestigt wird.

CRMI - Versione Entrata / *Input version* / Antriebausführung									
CRMI		28/...	40/...	50/...	63/...	70/...	85/...	110/...	130/...
IEC	**Y**	**K**	**K**	**K**	**K**	**K**	**K**	**K**	**K**
56 B5	120	49	70.5	-	-	-	-	-	-
56 B14	80	49•	-	-	-	-	-	-	-
63 B5	140	-	70.5	80.5	-	-	-	-	-
63B14	90	49	70.5•	80.5•	-	-	-	-	-
71 B5	160	-	70.5	80.5	94.5	100	-	-	-
71B14	105	-	70.5	80.5•	94.5•	100•	-	-	-
80 B5	200	-	-	80.5	94.5	100	118	-	-
80 B14	120	-	-	80.5	94.5	100	118•	-	-
90 B5	200	-	-	-	94.5	100	118	145	-
90 B14	140	-	-	-	94.5	100	120	-	-
100-112 B5	250	-	-	-	-	-	120	145	163
100-112 B14	160	-	-	-	-	100	120	146	-
132 B5	300	-	-	-	-	-	-	145.5	163
132 B14	200	-	-	-	-	-	-	-	-
160 B5	350	-	-	-	-	-	-	-	-
180 B5	350	-	-	-	-	-	-	-	-
200 B5	400	-	-	-	-	-	-	-	-
225 B5	450	-	-	-	-	-	-	-	-

(•) Vedi designazione 19 - PMT

(•) See designation 19 - PMT

(•) Siehe Beschreibung 19 - PMT

CRI - Versione Entrata / *Input version* / Antriebausführung								
CRI	**28/...**	**40/...**	**50/...**	**63/...**	**70/...**	**85/...**	**110/...**	**130/...**
d	9	11	14	18	19	24	28	38
tollerance d	j6	j6	j6	j6	j6	j6	j6	j6
L	20	22	30	45	40	50	60	80
m	M4	M5	M6	M6	M8	M8	M8	M10
M1	47	64	74	96	97	115	146	166

1.8 Dimensioni — *1.8 Dimensions* — 1.8 Abmessungen

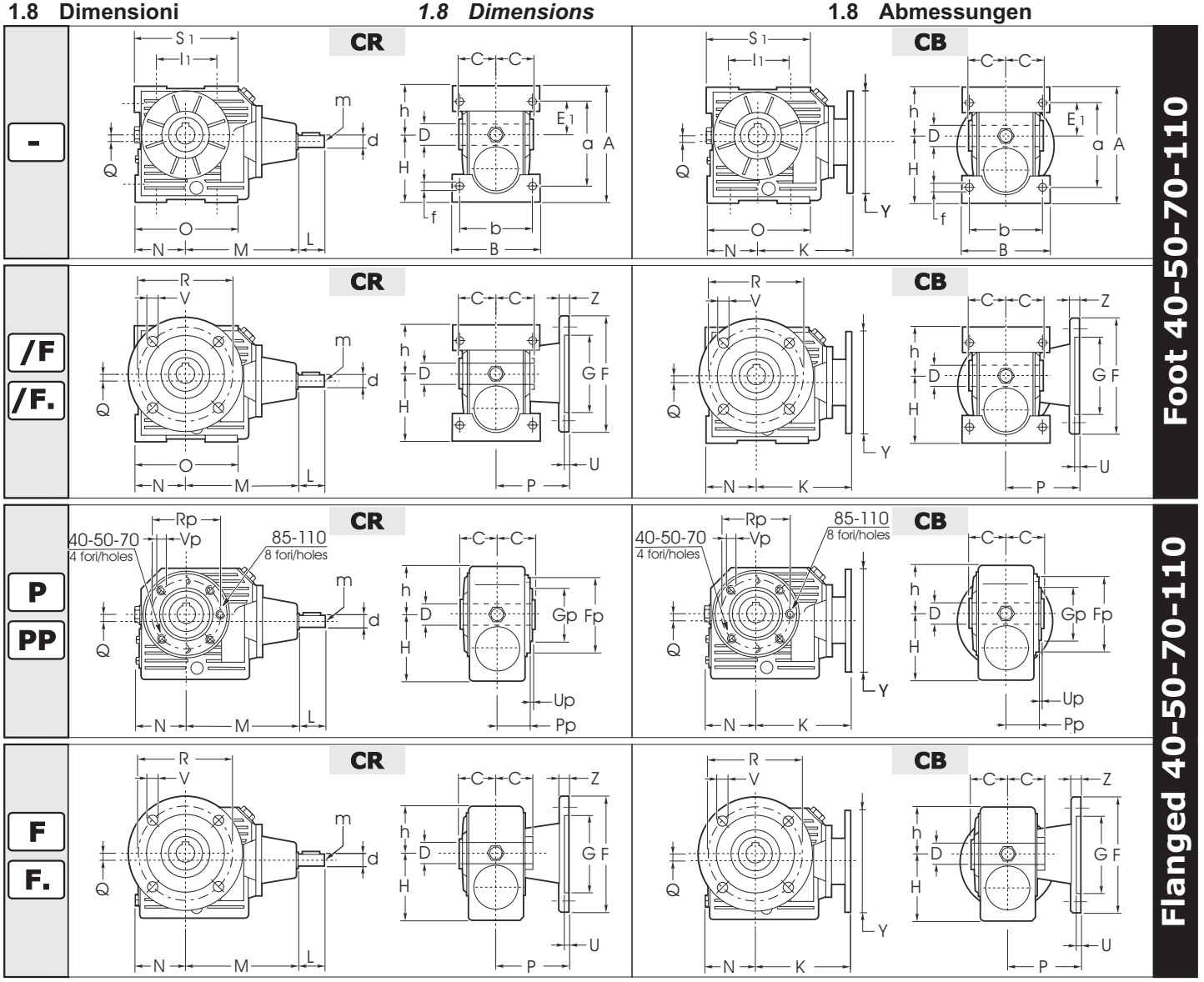

Dimensioni generali / *Dimensions* / Allgemeine Abmessungen						
Dimensions		**40**	**50**	**70**	**85**	**110**
C		41	49	60	61	77,5
D	Standard	19	24	28	32	42
	Optional	18	25	-	35	-
tollerance D		H7	H7	H7	H7	H7
N		59	69	93	116	142
Q		7	9	17,5	29	43

Foot - Versioni / *Versions* / Ausführungen					
Versions Foot	**40**	**50**	**70**	**85**	**110**
A	135	166	215	252	330
a	100	120	160	188	244
B	102	120	140	170	200
b	84	99	116	140	162
E1	40	46	61	74	97
f	7	9	11	13	14
H	78	97	127	145	190
h	57	69	88	107	140
l1	70	85	120	140	200
O	117	130	193	231	282
S1	117	130	186	221	277

1.8 Dimensioni

1.8 Dimensions

1.8 Abmessungen

P - PP - Versioni / *Versions* / Ausführungen					
Versions - P - PP	**40**	**50**	**70**	**85**	**110**
Fp	95	105	120	144	200
Gp	60	70	80	110	130
tollerance Gp	e8	e8	e8	e8	e8
Pp	38	49	57	56,5	74
Rp	83	85	100	130	165
Up	2	2,5	5	3,5	3
Vp	M6	M8	M8	M10	M12

FL - Versioni / *Versions* / Ausführungen					
Versions FL	**40**	**50**	**70**	**85**	**110**
	FL°	**FL°**	**FL°**	**FL**	**FL**
F	140	160	200	200	250
G	95	110	130	130	180
tollerance G	H8	H8	H8	H8	H8
P	82	91,5	111	100	150
R	115	130	165^{0}_{+11}	165	215
U	5	5	5	5	5
V	8,5	10	13	13	15
Z	9	10	11	12	16

F1-F2-F3-F4 - Versioni / *Versions* / Ausführungen															
Versions F1-F2-F3-F4	**40**		**50**				**70**			**85**			**110**		
	F1	**F2**	**F1**	**F2**	**F3**	**F4**	**F1°**	**F2°**	**F3**	**F1**	**F2**	**F3**	**F1**	**F2**	**F3**
F	106	120	125	125	140	125	175	175	160	200	210	160	200	270	270
G	60	80	70	70	95	70	115	115	110	130	152	110	130	170	170
tollerance G	H8	H8	H8	H8	H8	H8	H8	H8	H8	H8	H8	H8	H8	H8	H8
P	69	62	93	73	75	85	116	85	101	141	119,5	91	115	131,5	178
R	87	100	90^{0}_{+9}	100	115	$90^{0}_{+4.5}$	150	150	130	165	176	130	165	230	230
U	5	5	5	4	4	5	5	5	6	6	5	5	5	10	10
V	8,5	9	10,5	9	9	10,5	11	11	11	13	13	11,5	13	13,5	13,5
Z	9	9	10	9	9	11	10	10	11	12	14	10	12	18	18

La versione contrassegnata con il simbolo (°) è ottenuta applicando una flangia modulare sulla flangia pendolare della versione P-PP.

Version that is marked with (°) is obtained by applying a modular flange onto the shaft-mounted flange of the P-PP version.

Die mit (°) gekennzeichneten Version erhält man, indem ein Modulflansch an den Flansch mit Drehmomentstütze der P-PP Version befestigt wird.

CB - Versione Entrata / *Input version* / Antriebausführung						
CB		**40**	**50**	**70**	**85**	**110**
IEC	**Y**	**K**	**K**	**K**	**K**	**K**
56 B5	120	108	133	-	-	-
56 B14	80	109	133	-	-	-
63 B5	140	108	133	153	172.5	-
63B14	90	112•	133•	-	-	-
71 B5	160	-	133	153	172.5	-
71B14	105	-	-	-	-	-
80 B5	200	-	-	165	193	229
80 B14	120	-	-	-	-	-
90 B5	200	-	-	171	193	229
90 B14	140	-	-	-	-	-
100-112 B5	250	-	-	-	-	239
100-112 B14	160	-	-	-	-	-
132 B5	300	-	-	-	-	-
132 B14	200	-	-	-	-	-
160 B5	350	-	-	-	-	-
180 B5	350	-	-	-	-	-
200 B5	400	-	-	-	-	-
225 B5	450	-	-	-	-	-
250 B5	550	-	-	-	-	-
280 B5	550	-	-	-	-	-

(•) Vedi designazione 19 - PMT

(•) See designation 19 - PMT

(•) Siehe Beschreibung 19 - PMT

CR - Versione Entrata / *Input version* / Antriebausführung					
CR	**40**	**50**	**70**	**85**	**110**
d	14	19	24	28	32
tollerance d	j6	j6	j6	j6	j6
L	30	40	50	60	70
m	M6	M8	M8	M8	M10
M	137	143	188	212	264,5

1.8 Dimensioni *1.8 Dimensions* 1.8 Abmessungen

S

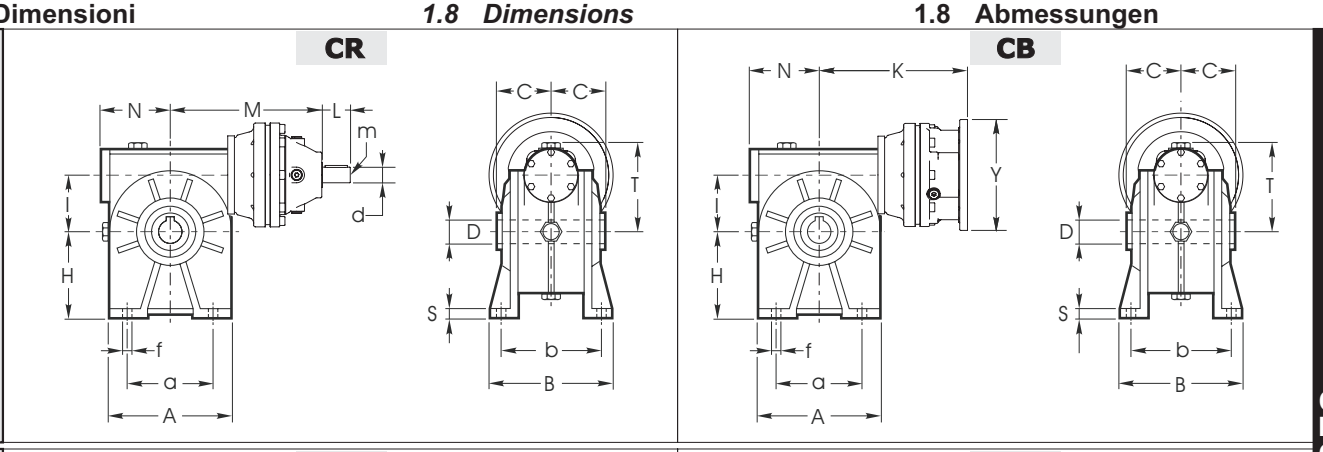

I

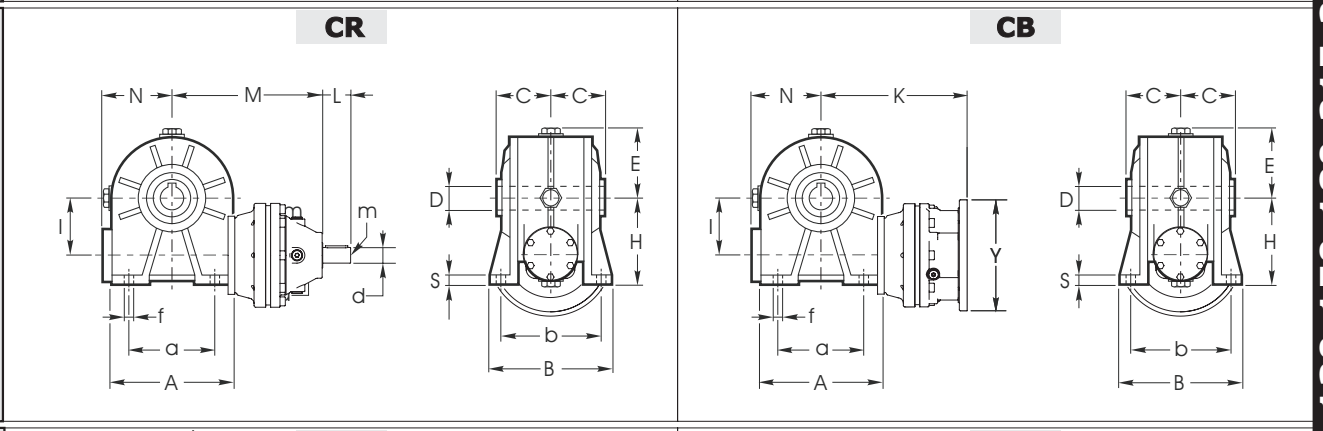

D

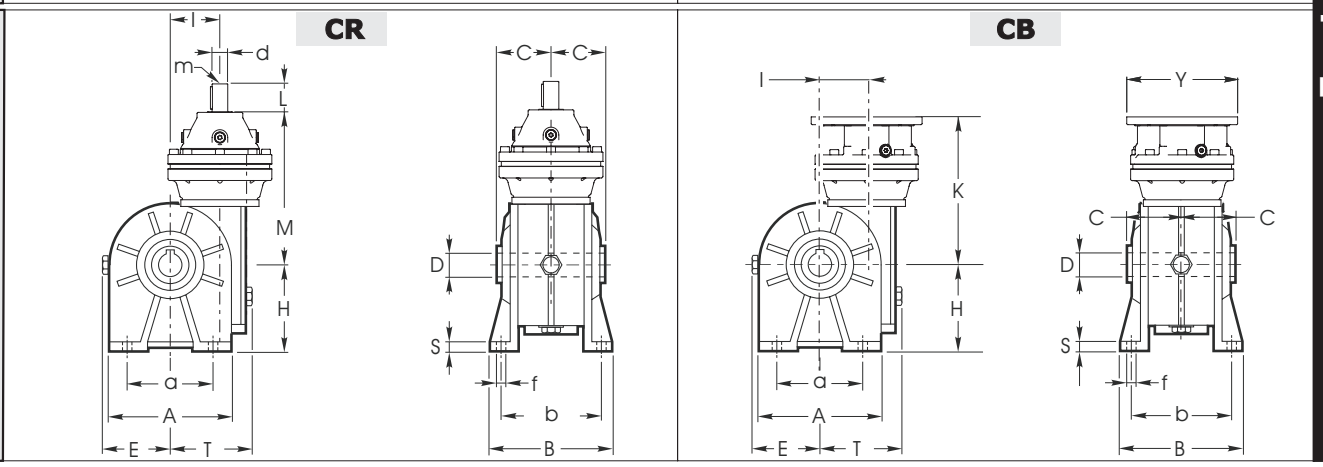

Foot 130-150-180-215-250

Dimensioni generali / *Dimensions* / Allgemeine Abmessungen						
Dimensions		**130**	**150**	**180**	**215**	**250**
C		90	105	120	140	160
D	Standard	48	55	65	90	110
	Optional	-	-	-	-	-
tollerance D		H7	H7	H7	H7	H7
I		130	150	180	215	250
N		161,5	189	232	275	329
E		154	178	210	249	289
T		195	224	265	332	383

S - I - D - Versioni / *Versions* / Ausführungen					
Versions S - I - D	**130**	**150**	**180**	**215**	**250**
A	286	336	400	440	500
a	235	260	310	340	400
B	230	250	320	380	439
b	190	210	260	320	385
f	15	19	22	26	33
H	200	230	265	335	430
H1	-	-	-	260	300
S	19	20	22	25	30

1.8 Dimensioni

1.8 Dimensions

1.8 Abmessungen

CB - Versione Entrata / *Input version* / Antriebausführung						
CB		**130**	**150**	**180**	**215**	**250**
IEC	**Y**	**K**	**K**	**K**	**K**	**K**
56 B5	120	-	-	-	-	-
56 B14	80	-	-	-	-	-
63 B5	140	295	333.5	386	463	523
63B14	90	-	-	-	-	-
71 B5	160	295	333.5	386	463	523
71B14	105	-	-	-	-	-
80 B5	200	295	333.5	386	463	523
80 B14	120	-	-	-	-	-
90 B5	200	295	333.5	386	463	523
90 B14	140	-	-	-	-	-
100-112 B5	250	303	341.5	394	471	531
100-112 B14	160	-	-	-	-	-
132 B5	300	324	362.5	415	492	552
132 B14	200	-	-	-	-	-
160 B5	350	358	396.5	465	542	591
180 B5	350	358	396.5	465	542	591
200 B5	400	-	-	449	526	589
225 B5	450	-	-	484	561	612.5
250 B5	550	-	-	-	-	612.5
280 B5	550	-	-	-	-	612.5

(•) Vedi designazione 19 - PMT

(•) See designation 19 - PMT

(•) Siehe Beschreibung 19 - PMT

CR - Versione Entrata / *Input version* / Antriebausführung					
CR	**130**	**150**	**180**	**215**	**250**
d	38	38	48	48	65
tollerance d	h7	h7	h7	h7	h7
L	58	58	82	82	105
m	M12	M12	M16	M16	M20
M	303	341,5	412	489	624,5

PARTICOLARE CORPO - 215 - 250

DETAIL OF THE GEARCASE - 215 - 250

DETAIL DES GEHÄUSES - 215 - 250

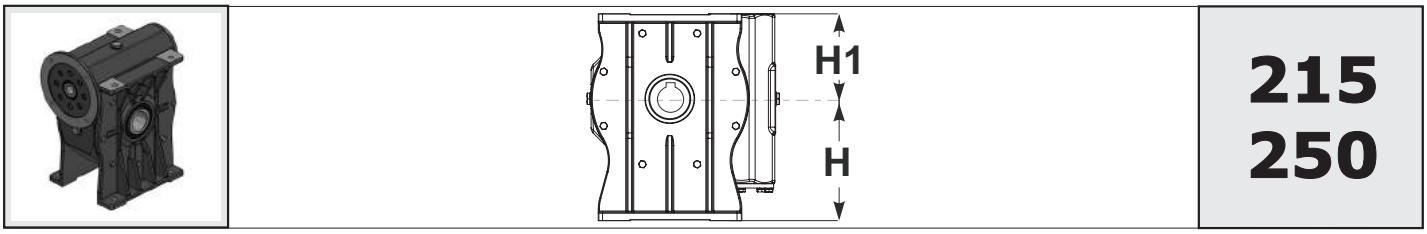

1.8 Dimensioni *1.8 Dimensions* 1.8 Abmessungen

Flanged 130-150-180-215-250

P **PP**

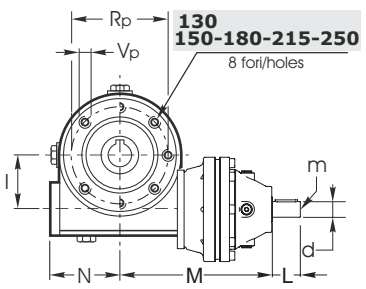

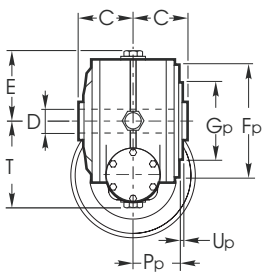

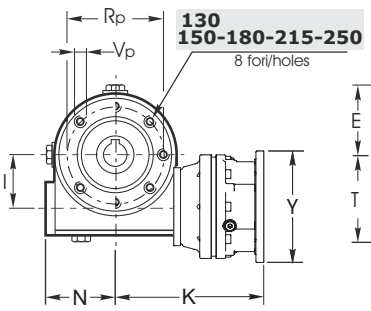

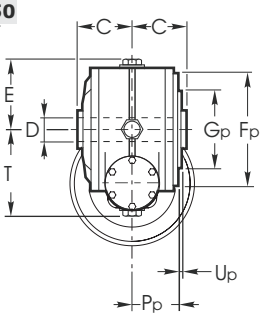

FL **F.**

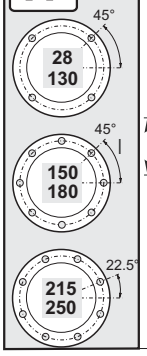

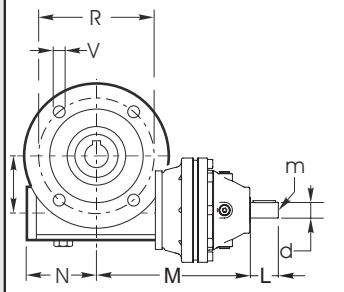

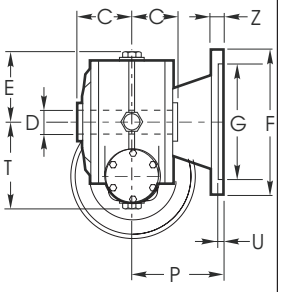

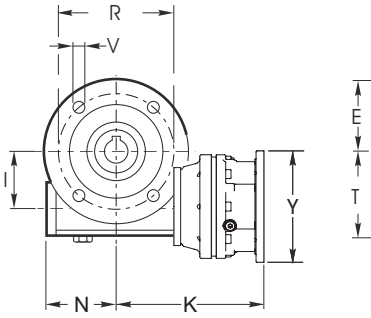

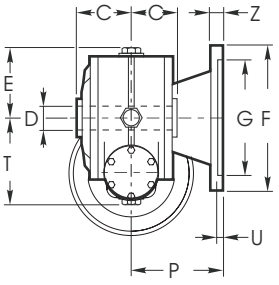

Dimensioni generali / *Dimensions* / Allgemeine Abmessungen						
Dimensions		**130**	**150**	**180**	**215**	**250**
C		90	105	120	140	160
D	Standard	48	55	65	90	110
	Optional	-	-	-	-	-
tollerance D		H7	H7	H7	H7	H7
I		130	150	180	215	250
N		161,5	189	232	275	329
E		154	178	210	249	289
T		195	224	265	332	383

P - PP - Versioni / *Versions* / Ausführungen					
Versions - P - PP	**130**	**150**	**180**	**215**	**250**
Fp	242	250	300	348	450
Gp	180	180	230	250	350
tollerance Gp	e8	e8	e8	e8	e8
Pp	87	102	117	135	155
Rp	215	215	265	300	400
Up	5	5	5	5	5
Vp	M12	M14	M16	M16	M16

1.8 Dimensioni

1.8 Dimensions

1.8 Abmessungen

FL - Versioni / *Versions* / Ausführungen					
Versions FL	**130 FL**	**150 FL**	**180 FL**	**215 FL**	**250 FL**
F	300	350	400	550	550
G	230	250	300	450	450
tollerance G	H8	H8	H8	H8	H8
P	150	160	180	240	245
R	265	300	350	500	500
U	5	6	6,5	7	6
V	15	19	22	18	22
Z	18	18	22	25	25

F1-F2-F3-F4 - Versioni / *Versions* / Ausführungen	
Versions F1-F2-F3-F4	**180 F2**
F	400
G	300
tollerance G	H8
P	150
R	350
U	6,5
V	22
Z	22

CB - Versione Entrata / *Input version* / Antriebausführung							
CB		**110**	**130**	**150**	**180**	**215**	**250**
IEC	**Y**	**K**	**K**	**K**	**K**	**K**	**K**
56 B5	120	-	-	-	-	-	-
56 B14	80	-	-	-	-	-	-
63 B5	140	-	295	333.5	386	463	523
63B14	90	-	-	-	-	-	-
71 B5	160	-	295	333.5	386	463	523
71B14	105	-	-	-	-	-	-
80 B5	200	229	295	333.5	386	463	523
80 B14	120	-	-	-	-	-	-
90 B5	200	229	295	333.5	386	463	523
90 B14	140	-	-	-	-	-	-
100-112 B5	250	239	303	341.5	394	471	531
100-112 B14	160	-	-	-	-	-	-
132 B5	300	-	324	362.5	415	492	552
132 B14	200	-	-	-	-	-	-
160 B5	350	-	358	396.5	465	542	591
180 B5	350	-	358	396.5	465	542	591
200 B5	400	-	-	-	449	526	589
225 B5	450	-	-	-	484	561	612.5
250 B5	550	-	-	-	-	-	612.5
280 B5	550	-	-	-	-	-	612.5

(•) Vedi designazione 19 - PMT

(•) See designation 19 - PMT

(•) Siehe Beschreibung 19 - PMT

CR - Versione Entrata / *Input version* / Antriebausführung					
CR	**130**	**150**	**180**	**215**	**250**
d	38	38	48	48	65
tollerance d	h7	h7	h7	h7	h7
L	58	58	82	82	105
m	M12	M12	M16	M16	M20
M	303	341,5	412	489	624,5

1.8 Dimensioni

Esecuzione con vite bisporgente

1.8 Dimensions

Double extended input shaft

1.8 Abmessungen

Ausführung mit Wellenzapfen auf beiden Seiten

RI - CR - CRI	28	40	50	63	70	85	110	130	150	180	215	250
d	9	11	14	18	19	24	28	38	42	48	48	55
tollerance d	j6	j6	j6	j6	j6	j6	j6	j6	j6	j6	m6	m6
L	20	22	30	45	40	50	60	80	100	110	110	110
m	M4	M5	M6	M6	M8	M8	M8	M10	M12	M14	M16	M16
M	47	64	74	96	97	115	146	166	193	235	289,5	334
M0	47	64	74	85	97	115	146	166	193	235	289,5	334

RI

CR

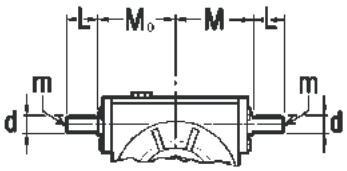

RMI

CB

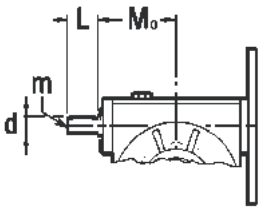

Nei riduttori combinati è necessario specificare se questa configurazione è riferita al primo riduttore (in entrata) o al secondo riduttore (in uscita).

In combined gearboxes, it is necessary to specify if such configuration refers to the first gearbox (input gearbox) or to the second one (output gearbox).

Bei den Kombinationsgetrieben muß angegeben werden, ob sich die Konfiguration auf das erste Getriebe (Eingang) oder auf das zweite (Ausgang) bezieht.

CRI
CRMI

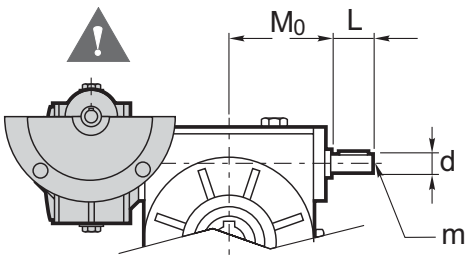

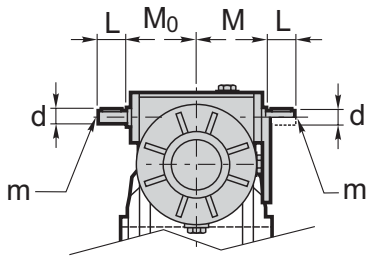

1.8 Dimensioni

1.8 Dimensions

1.8 Abmessungen

Accoppiamenti

E' inoltre disponibile un kit che permette di combinare modularmente i riduttori, utilizzando un riduttore in entrata in versione flangiata e il riduttore in uscita predisposto con flangia attacco motore IEC.
La tabella seguente indica le possibili combinazioni.

Coupling

To make you more flexible it is also possible to supply the gearboxes seperately and to combine them with an assembling kit. For this we deliver the input gearbox in the flanged version and the output gearbox with IEC motor connecting flange.
The possible combinations and the assembling kits are listed below.

Kupplung

Um bei der Kombination der Getrebe vorort flexibler zu sein, beiten wir einen Montage-Kit an, mit dessen Hilfe ein Standardgetriebe mit Abtriebsflansch in der ersten Übersetzungsstufe und ein Standardgetriebe mit IEC-Eingangsflansch in der zweiten Übersetzungsstufe kombiniert werden können.
Die Kombinationsmöglichkeiten sowie die zugehörigen Montage-Kits sind in der folgenden Tabelle aufgelistet.

B

Nei riduttori e motovariatori combinati 28/28 e 28/40 (accoppiati con kit di montaggio) l'asse della vite del 1° riduttore è sempre inclinata di 45° rispetto all'asse orizzontale o verticale. Specificare la posizione in fase di ordine.
In the combined worm gearboxes and motor-variators 28/28 and 28/40 (coupled with an assembly kit) the wormshaft axis of the first gearbox has always a tilt of 45° compared to the horizontal or vertical axis.
The position has to be specified in the order.
Wird das Kombinationsgetriebe 28/28 und 28/40 mit Hilfe des Montagekits gebildet, so befindet sich die Achse des ersten Getriebes immer in 45º bezüglich zur Horizontalen bzw. Vertikalen. Bei Auftragserteilung bitte die Montageposition angeben.

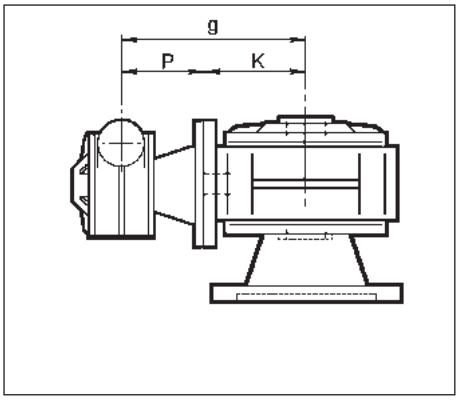

CRI CRMI	P	K	g	Riduttore in entrata *Input gearbox* Erstes Getriebe	Kit di montaggio *Assembling kit* Montage-kit	Riduttore uscita *Output gearbox* Zweites Getriebe
28/28	53	49	102	**28 F1**	KIT 28/28	**28 IEC56 B14**
40/40	82	71	153	**40 FL**	KIT 40/40G	**40 IEC63 B5**
40/50	82	81	163	**40 FL**	KIT 40/50G	**50 IEC140/14**
50/50	91.5	77	168.5	**50 FL**	KIT 50/50G	**50 IEC71 B5**
40/63	82	95	177	**40 FL**	KIT 40/63G	**63 IEC140/19**
50/63	91.5	95	186.5	**50 FL**	KIT 50/63G	**63 IEC160/19**
63/63	82	95	177	**63 F3**	KIT 63/63G	**63 IEC160/19**
40/70	8	100	182	**40 FL**	KIT 40/70	**70 IEC140/19**
50/70	91.5	100	191.5	**50 FL**	KIT 50/70	**70 IEC160/19**
63/70	82	100	182	**63 F3**	KIT 63/70	**70 IEC160/19**
70/70	111	100	211	**70 FL**	KIT 70/70	**70 IEC80 B5**
40/85	82	120	202	**40 FL**	KIT 40/85	**85 IEC90 B14**
50/85	91.5	116	209.5	**50 FL**	KIT 50/85	**85 IEC160/24**
63/85	82	116	200	**63 F3**	KIT 63/85	**85 IEC160/24**
70/85	111	116	229	**70 FL**	KIT 70/85	**85 IEC90 B5**
85/85	100	116	218	**85 FL**	KIT 85/85	**85 IEC90 B5**
50/110	91.5	146	237.5	**50 FL**	KIT 50/110	**110 IEC100 B14**
63/110	82	146	228	**63 F3**	KIT 63/110	**110 IEC100 B14**
70/110	111	145	256	**70 FL**	KIT 70/110	**110 IEC200/28**
85/110	100	145	245	**85 FL**	KIT 85/110	**110 IEC200/28**
63/130	102	163	265	**63 F2**	KIT 63/130	**130 IEC200/28**
110/215	150	285	435	**110 FL**	KIT 110/215	**215 IEC250/42**
130/250	150	335	485	**130 FL**	KIT 130/250	**250 IEC300/48**

1.8 Dimensioni

1.8 Dimensions

1.8 Abmessungen

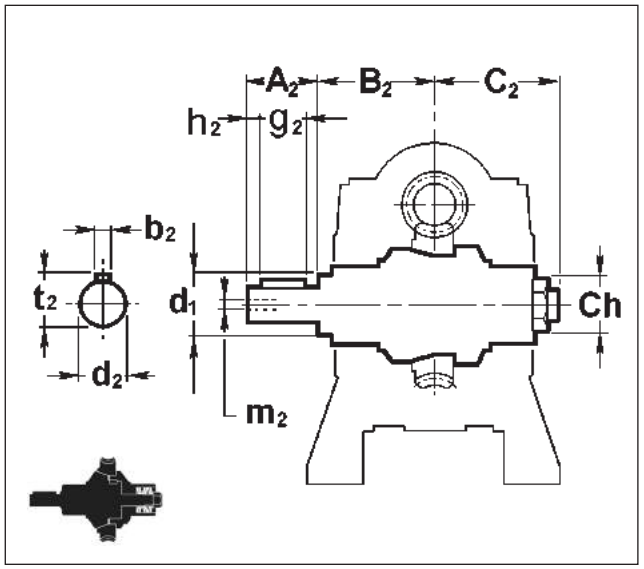

		RI - RMI - CRI - CRMI								
		28	**40**	**50**	**63**	**70**	**85**	**110**	**130**	**150**
LP	**Ch**	17	19	22	24	24	27	32	46	46
	b_2	5	6	8	8	8	10	12	14	16
	d_1	17	22	28	32	34	38	50	60	63
	d_2 k6	14	19	24	25	28	32	42	48	55
	t_2	16	21.5	27	28	31	35	45	51.5	59
	A_2	29.5	40	45	60	60	71	100	110	110
	B_2	31.5	51	59	65	70	71	87.5	110	125
	C_2	41	49	60	70	66	75	94.5	118	110
	h_2	5	7	7.5	8	10	10	10	10	10
	g_2	20	25	30	40	40	50	80	90	90
	m_2	M6	M8	M8	M8	M8	M10	M10	M10	M12
			40	**50**		**70**	**85**	**110**		
			CR -CB							

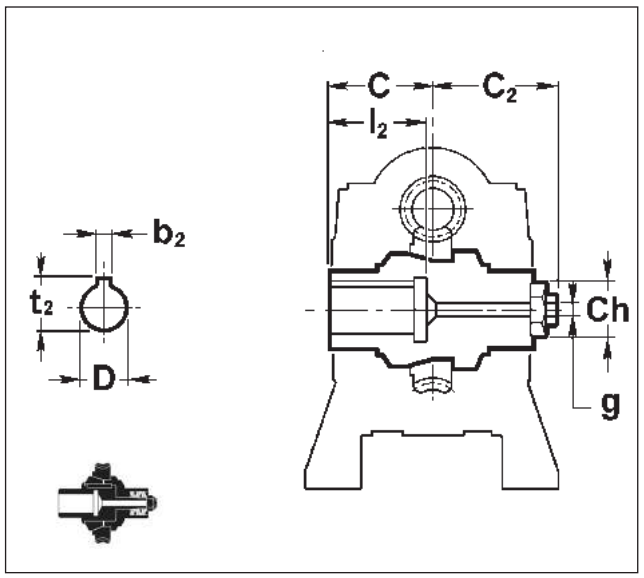

		RI - RMI - CRI - CRMI								
		28	**40**	**50**	**63**	**70**	**85**	**110**	**130**	**150**
LC	**Ch**	17	19	22	24	24	27	32	46	46
	b_2	5	6	8	8	8	10	12	14	16
	D_{H7}	14	19	24	25	28	32	42	48	55
	t_2	16.3	21.8	27.3	28.3	31.3	35.3	45.3	51.8	59.3
	C	30	41	49	60	60	61	77.5	90	105
	C_2	41	49	60	70	66	75	94.5	118	110
	l_2	27	38	46	53	56	60	90	97	110
	g	4.5	5.5	7	7	9	9	11	11	11
			40	**50**		**70**	**85**	**110**		
			CR - CB							

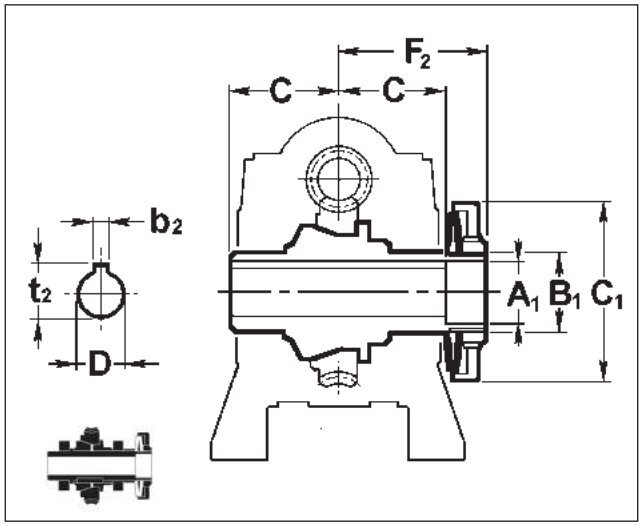

		RI - RMI - CRI - CRMI							
		40	**50**	**63**	**70**	**85**	**110**	**130**	**150**
LF	**D_{H7}**	19	24	25	28	32	42	48	55
	b_2	6	8	8	8	10	12	14	16
	t_2	21.8	27.3	28.3	31.3	35.3	45.3	51.8	59.3
	A_1	25	31	32	36	40	51	59	66
	B_1	M30	M40	M40	M45	M50	M60	M75	M80
	C_1	70	90	90	100	110	135	140	165
	C	41	49	60	60	61	77.5	90	105
	F_2	60	74	85	85	84	110.5	130	155
		40	**50**		**70**	**85**	**110**		
		CR - CB							

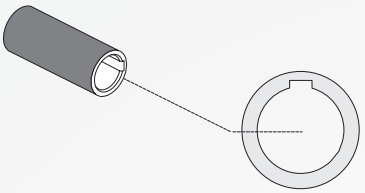

B99

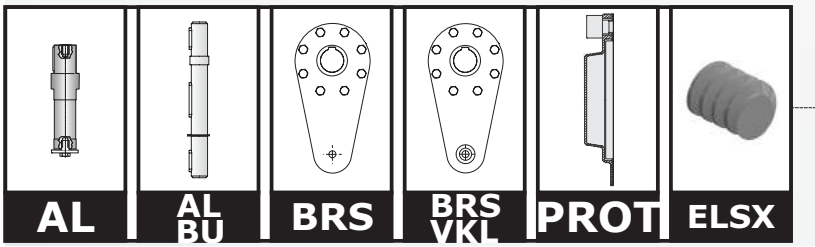

B100

1.8.1 - ALBERI LENTI *1.8.1 - OUTPUT SHAFT* 1.8.1 - ABTRIEBSWELLEN

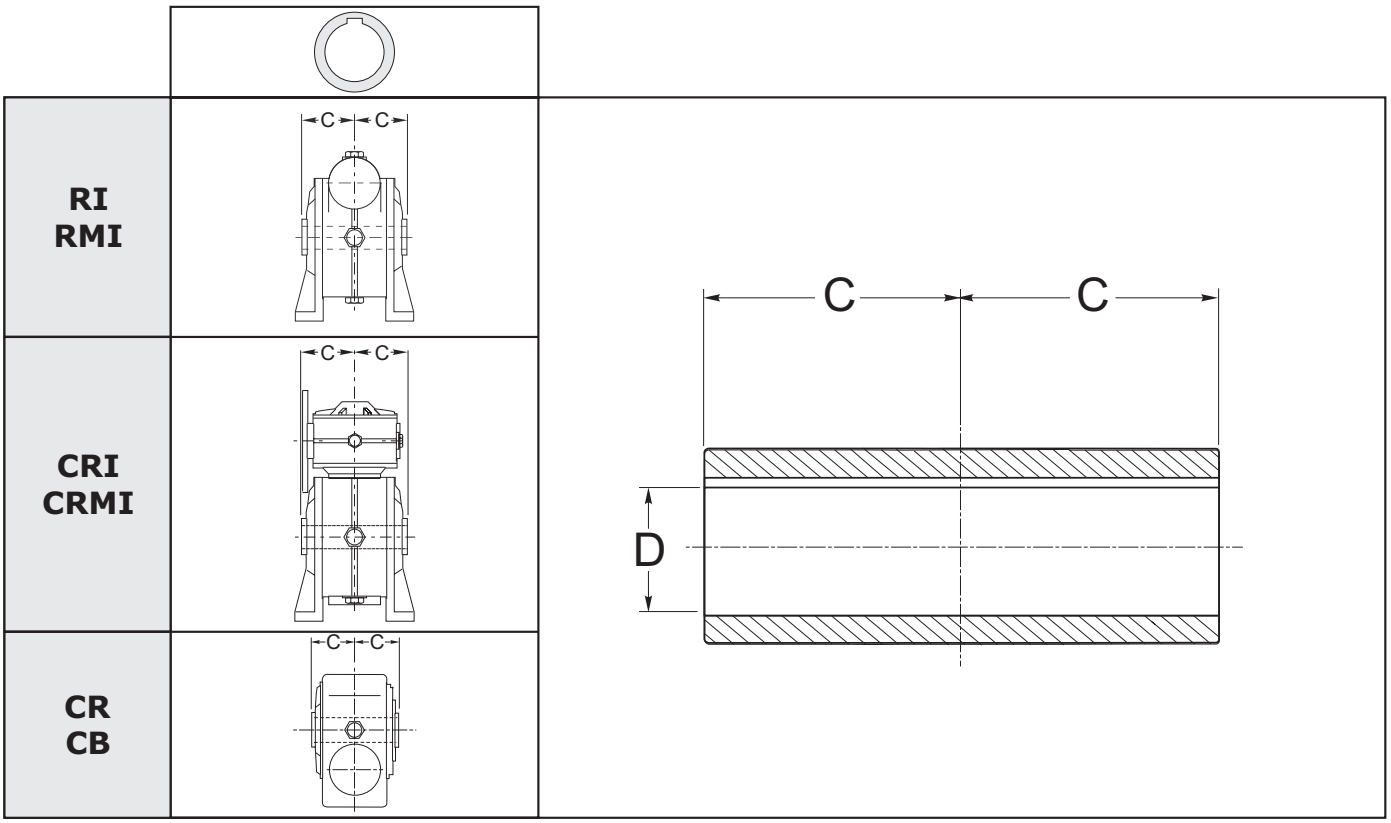

RI - RMI		28	40	50	63	70	85	110	130	150	180	215	250
CRI - CRMI		28/28	28/40 40/40	28/50 40/50	28/63 40/63	28/70 40/70 50/70 63/70	40/85 50/85 63/85 70/85	50/110 63/110 70/110 85/110	63/130 70/130 85/130	85/150 110/150	85/180 110/180 130/180	110/215	13/250
CR - CB		—	40	50	—	70	85	110	130	150	180	215	250
D	Standard	14	19	24	25	28	32	42	48	55	65	90	110
	Optional	-	18	25	-	-	35	-	-	-	-	-	-
tollerance D		H7	H7	H7	H7	H7	H7	H7	H7	H7	H7	H7	H7
C		30	41	49	60	60	61	77,5	90	105	120	140	160

Perno macchina / *Customer shaft* / Maschinachse

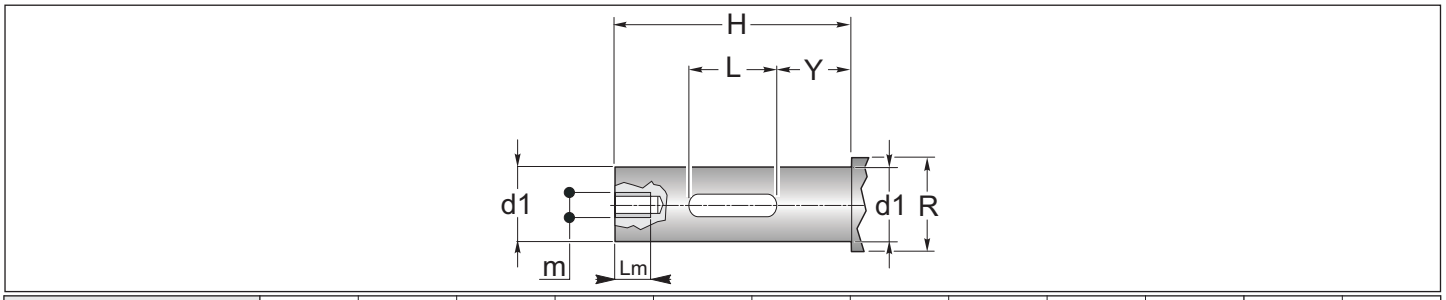

RI - RMI		28	40	50	63	70	85	110	130	150	180	215	250
CRI - CRMI		28/28	28/40 40/40	28/50 40/50	28/63 40/63	28/70 40/70 50/70 63/70	40/85 50/85 63/85 70/85	50/110 63/110 70/110 85/110	63/130 70/130 85/130	85/150 110/150	85/180 110/180 130/180	110/215	130/250
CR - CB		—	40	50	—	70	85	110	130	150	180	215	250
d1	Standard	14	19	24	25	28	32	42	48	55	65	90	110
	Optional	-	18	25	-	-	35	-	-	-	-	-	-
tollerance d1		g6	g6	g6	g6	g6	g6	g6	g6	g6	g6	g6	g6
H		58	80	95	109	117	119	153	177	207	239	275	315
L		20	40	50	60	60	70	80	90	100	120	160	200
m		M6	M8	M8	M8	M8	M10	M10	M10	M12	M14	M16	M20
Lm		16	16	20	20	20	25	25	25	32	35	40	50
R	Standard	17	22	28	34	34	38	50	58	63	78	109	125
	Optional	-	22	30	-	-	40	-	-	-	-	-	-
Y		20	21	24	30	30	26	37	45	55	60	60	60

1.9 OPT - ACC. - Accessori - Opzioni

1.9 OPT - ACC. - Accessories - Options

1.9 OPT - ACC. Zubehör - Optionen

AL
AL - ALBERO LENTO SPORGENTE
AL - SINGLE OUTPUT SHAFTS
AL - EINSEITIGE ABTRIEBSWELLEN

Tutti i riduttori a vite senza fine sono forniti con albero lento cavo.
A richiesta, possono essere forniti alberi lenti come indicato nei disegni dimensionali.
Le dimensioni delle linguette sono conformi alle norme UNI 6604-69.

All worm gearboxes are supplied with hollow output shaft. Output shafts as shown in the size drawings can be supplied upon request.

Sizes of feathers comply with standards UNI 6604-69.

AL BU
AL_BU - ALBERO LENTO BISPORGENTE
AL_BU - DOUBLE OUTPUT SHAFTS
AL_BU - BEIDSEITIGE ABTRIEBSWELLEN

Alle Schneckengetriebe werden mit hohler Abtriebswelle geliefert. Auf Anfrage können Abtriebswellen gemäß den Maßzeichnungen geliefert werden.

Die Abmessungen der Federn entsprechen den Normen UNI 6604-69.

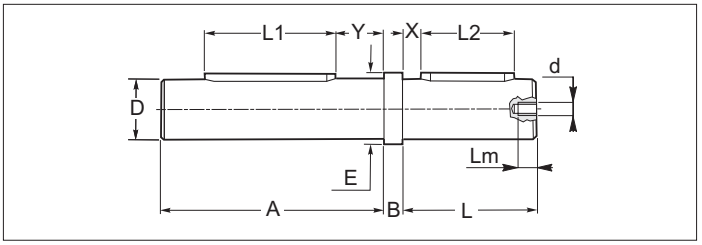

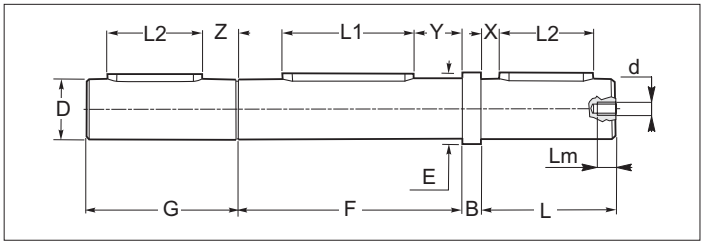

RI RMI

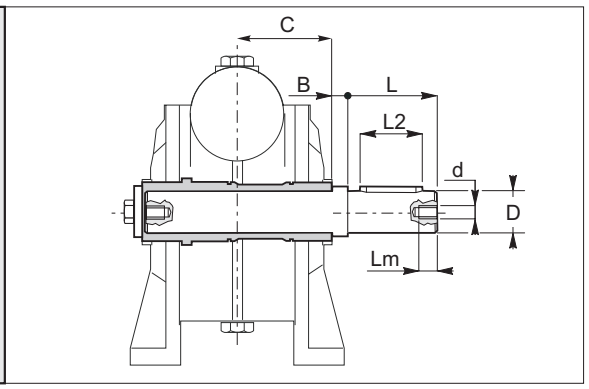

RI RMI

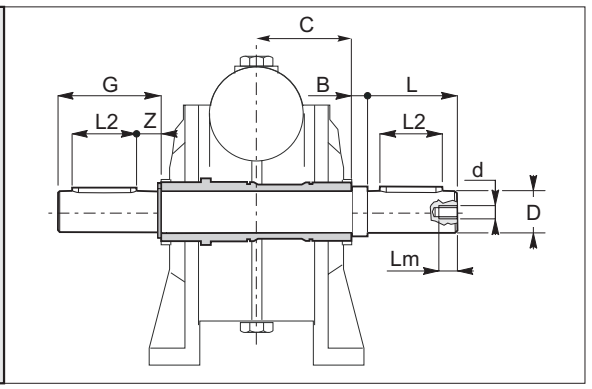

CRI CRMI

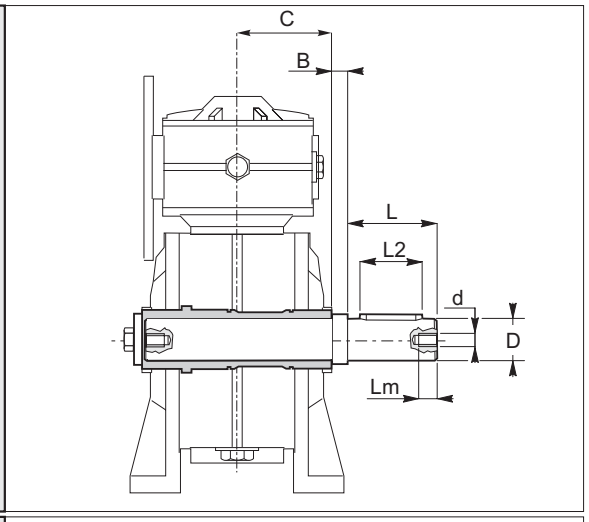

CRI CRMI

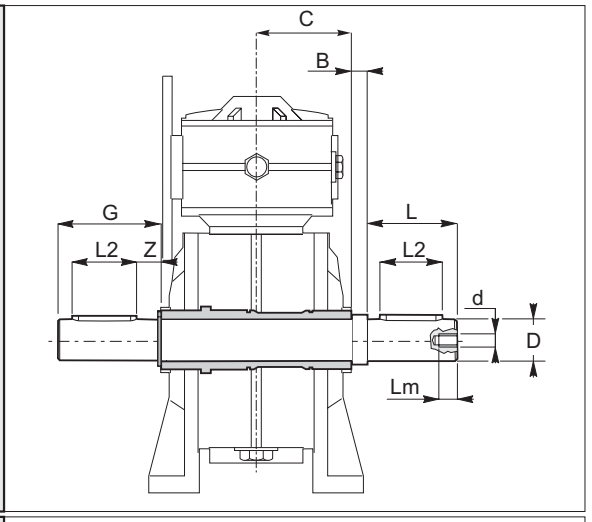

CR CB

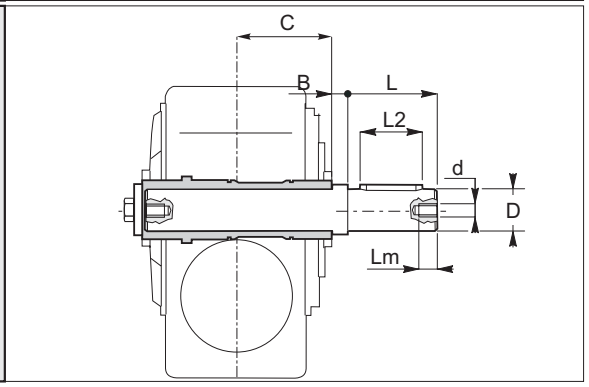

CR CB

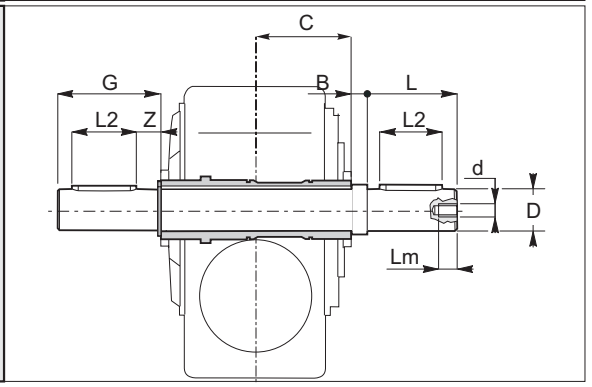

1.9 OPT - ACC. - Accessori - Opzioni

1.9 OPT - ACC. - Accessories - Options

1.9 OPT - ACC. Zubehör - Optionen

AL

AL - ALBERO LENTO SPORGENTE
AL - SINGLE OUTPUT SHAFTS
AL - EINSEITIGE ABTRIEBSWELLEN

AL BU

AL_BU - ALBERO LENTO BISPORGENTE
AL_BU - DOUBLE OUTPUT SHAFTS
AL_BU - BEIDSEITIGE ABTRIEBSWELLEN

B

RI - RMI	28	40	50	63	70	85	110	130	150	180	215*	250*
CRI - CRMI	28/28	28/40 40/40	28/50 40/50	28/63 40/63	28/70 40/70 50/70 63/70	40/85 50/85 63/85 70/85	50/110 63/110 70/110 85/110	63/130 70/130 85/130	85/150 110/150	85/180 110/180 130/180	110/215 *	130/250 *
CR - CB	—	40	50	—	70	85	110	130	150	180	215*	250*
A	58	80	95	109	117	119	153	177	207	239	-	-
B	1,5	10	10	10	10	10	10	20	20	20	10	10
C	30	41	49	60	60	61	77,5	90	105	120	140	160
D	14	19	24	25	28	32	42	48	55	65	90	110
tollerance D	g6	g6	g6	g6	g6	g6	g6	g6	g6	g6	m6	m6
d	M6	M8	M8	M8	M8	M10	M10	M10	M12	M14	M16	M20
E	17	22	28	34	34	38	50	58	63	78	109	125
F	60	82	98	120	120	122	155	180	210	240	-	-
G	31	50	55	70	70	81	110	130	130	150	-	-
L	29,5	40	45	60	60	71	100	110	110	130	130	165
L1	20	40	50	60	60	70	80	90	100	120	-	-
L2	20	25	30	40	40	50	80	90	90	100	110	140
Lm	16	16	20	20	20	25	25	25	32	35	40	50
X	4,5	8	7,5	10	10	10	10	10	10	15	10	12,5
Y	20	21	24	30	30	26	37	15	55	60	-	-
Z	6	18	18	20	20	20	20	30	30	35	-	-

* A richiesta / On request / Auf Anfrage
Grandezza / Size / Größe **215 - 250**
AL - AL_BU - Albero integrale / *integral output shaft* / Integralwelle

ATTENZIONE
L'albero lento sporgente è fornito per essere installato sulla versione del riduttore con albero **CAVO** con diametro **STANDARD**.

ATTENTION
The output shaft is available only for standard hollow shaft diameter.

Achtung:
Die Einseitige Abtriebswelle wird fuer die Montage bei Getrieben mit Standart Hohlwelle geliefert.

N.B.
Tutti gli alberi lenti vengono forniti in kit di montaggio completi di linguette, rondelle, viti (e anelli elastici seeger per l'albero bisporgente)

NOTE
All output shafts are supplied in kit complete with feathers, washers and screws (as well as snap rings for the double extended shaft).

HINWEIS
Alle Abtriebswellen werden als Bausätze komplett mit Federn, Scheiben und Schrauben geliefert (bei der beidseitigen Abtriebswelle auch die Seegerringe).

1.9 OPT - ACC. - Accessori - Opzioni

1.9 OPT - ACC. - Accessories - Options

1.9 OPT - ACC. Zubehör - Optionen

BRS — **BRS - Braccio Reazione Semplice**
BRS- Torque arm – Single
BRS- Drehmomentstütze – Normal

Standard

Per il fissaggio del riduttore mediante tirante, viene fornito in allegato l'apposito braccio di reazione.

If the gearbox shall be shaft mounted as an extra part there is also available a torque arm.

BRS VKL — **BRS_VKL - Braccio Reazione Semplice_con boccola_VKL**
BRS_VKL - Torque arm - Single_with VKL_bushing
BRS_VKL - Drehmomentstütze - Normal_mit VKL - Buchse

Soll das Getriebe pendelnd gelagert werden, so ist als Zubehörteil auch eine Drehmomentstütze.

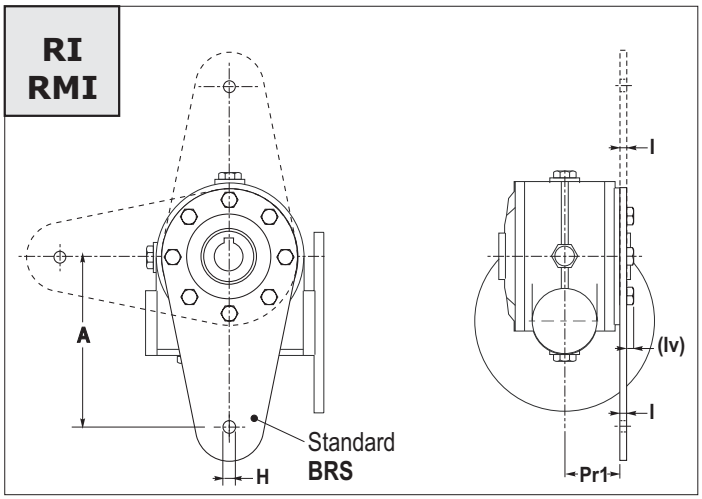

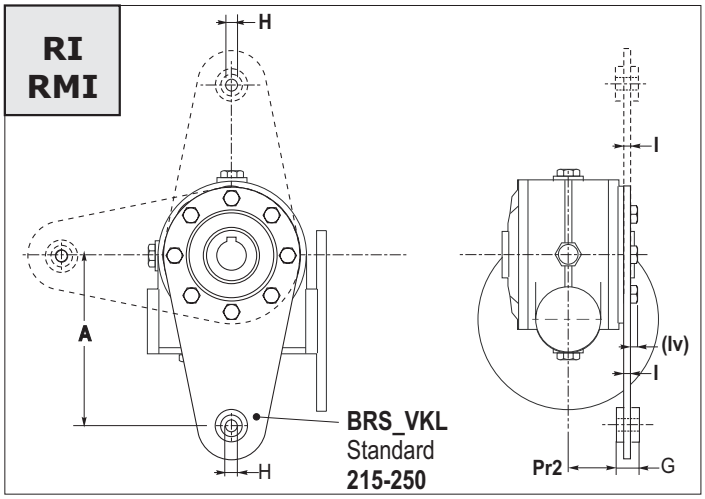

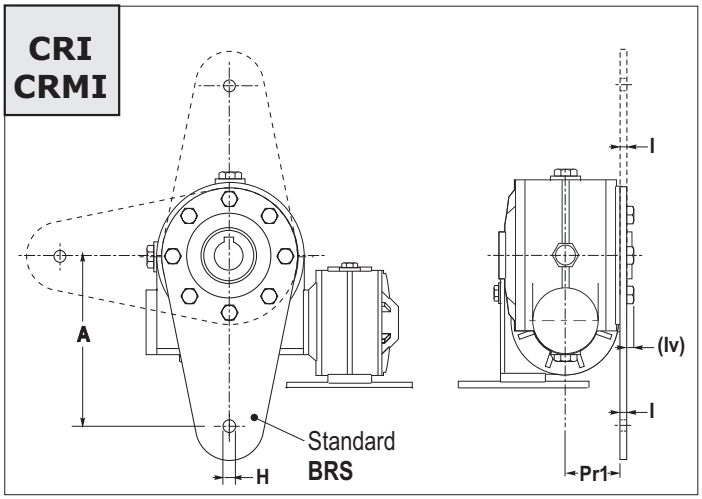

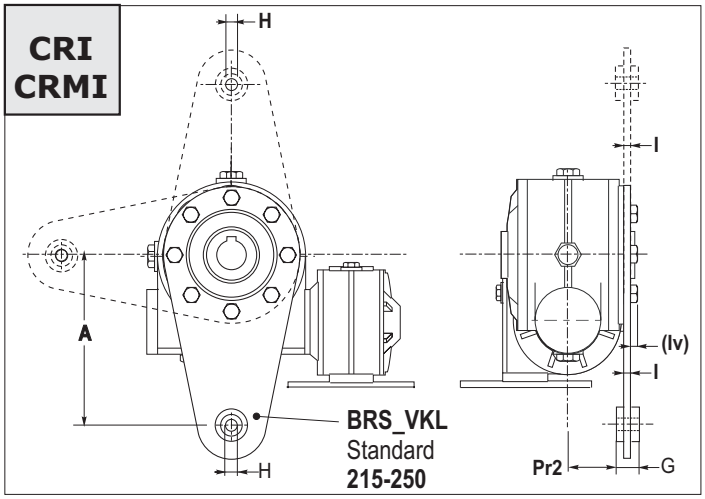

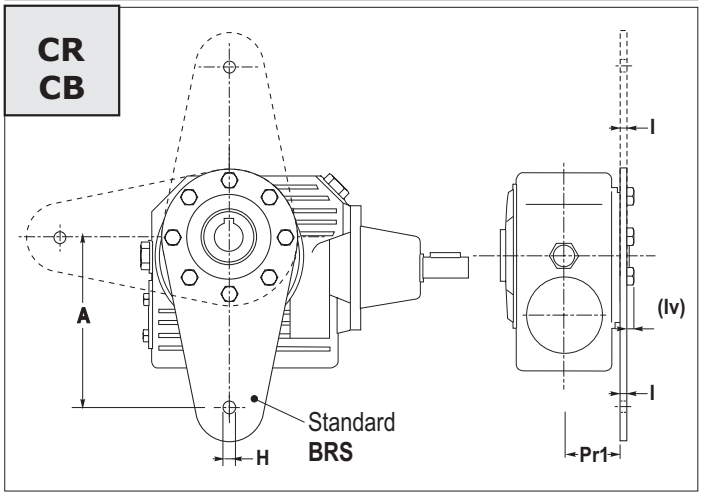

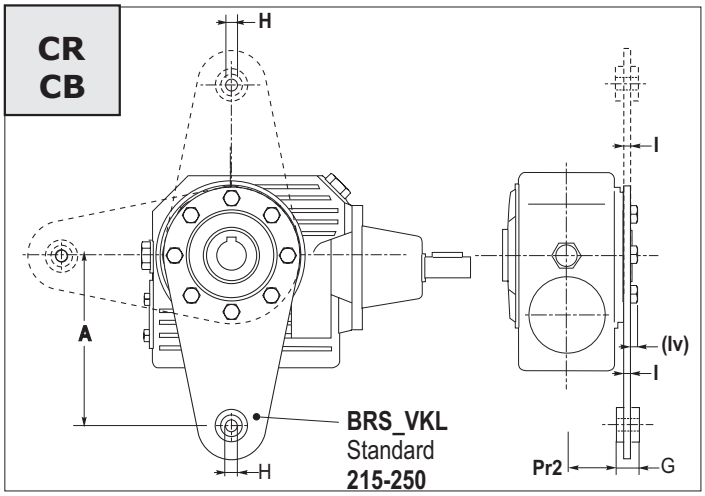

1.9 OPT - ACC. - Accessori - Opzioni

1.9 OPT - ACC. - Accessories - Options

1.9 OPT - ACC. Zubehör - Optionen

BRS BRS - Braccio Reazione Semplice
BRS- Torque arm – Single
BRS- Drehmomentstütze – Normal

Standard

BRS VKL BRS_VKL - Braccio Reazione Semplice_con boccola_VKL
BRS_VKL - Torque arm - Single_with VKL_bushing
BRS_VKL - Drehmomentstütze - Normal_mit VKL - Buchse

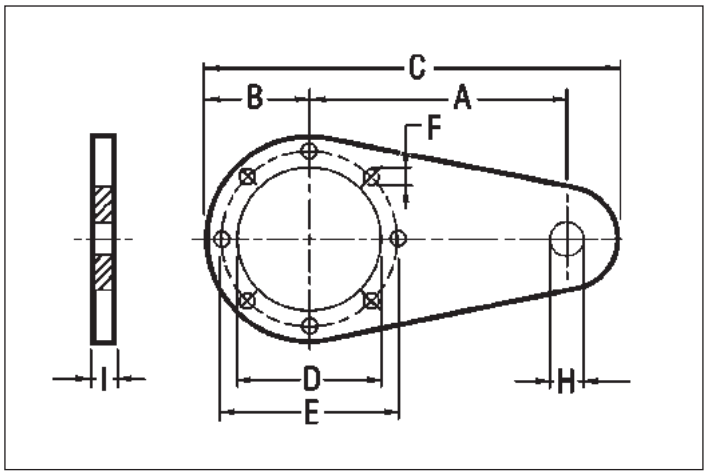

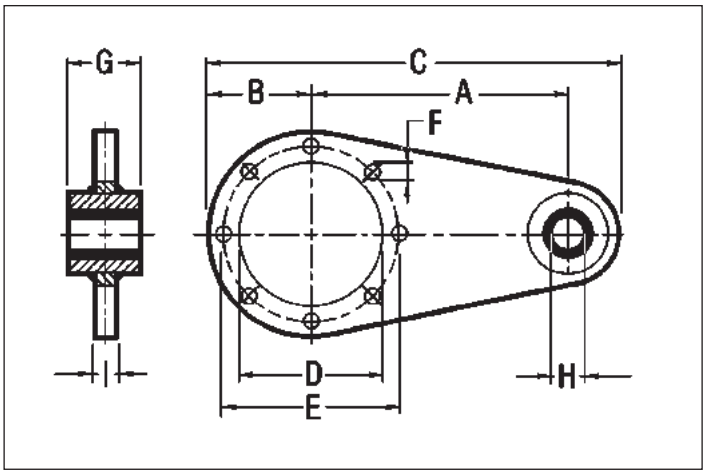

B

RI - RMI	28	40	50	63	70	85	110	130	150	180	215	250
CRI - CRMI	28/28	28/40 40/40	28/50 40/50	28/63 40/63	28/70 40/70 50/70 63/70	40/85 50/85 63/85 70/85	50/110 63/110 70/110 85/110	63/130 70/130 85/130	85/150 110/150	85/180 110/180 130/180	110/215	130/250
CR - CB	—	40	50	—	70	85	110	130	150	180	215	250
A	70	90	100	150	150	200	250	300	350	400	350	400
B	34,5	50	52.5	53	60	75	100	120	125	150	175	225
C	119,5	165	177.5	230	240	313	388	465	525	610	625	725
D	42,15	60	70	70	80	110	130	180	180	230	250	350
E	56	83	85	85	100	130	165	215	215	265	300	400
F	6,5	7	9	9	9	11	13	13	15	17	17	19
G		15	15	20	20	25	25	30	30	35	60	60
H	9	10	10	10	10	20	20	25	25	35	50	50
I	4	4	4	6	6	6	6	6	6	10	8	10
Pr1	36	38	49	57,5	57	56,5	74	87	102	117	—	—
Pr2	—	32,5	43,5	50,5	50	47	64,5	75	90	104,5	109	130

PROT PROT. - Coperchio di protezione

PROT. - Protection cover

PROT - Schultzvorrichtungdeckel

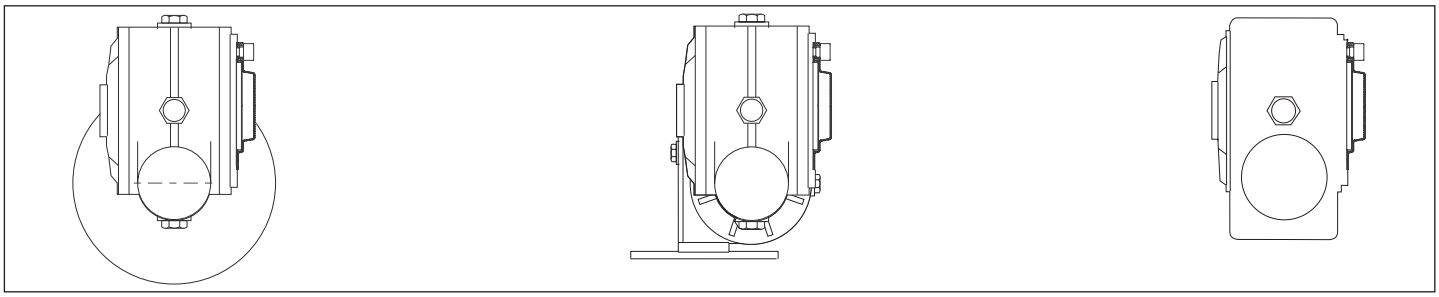

ELSX ELSX - Vite senza fine - Elica Sinistra

ELSX - Worm Geraboxe - Left helix

ELSX - Linksgängige Schraubenlinie der Schneke

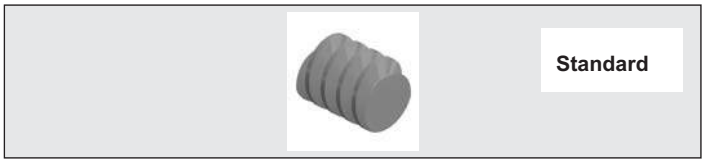

Standard

1.10 Linguette

1.10 Keys

1.10 Paßfedern

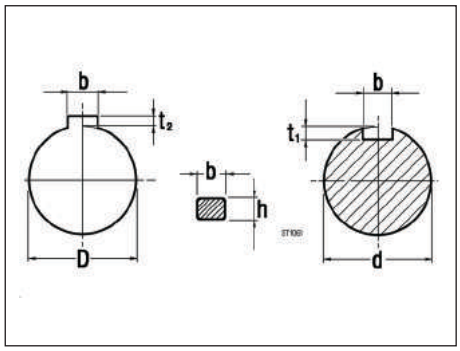

Albero entrata
Input shaft
Antriebswelle

d	b x h	t_1	
9	3 x 3	1.8	
11	4 x 4	2.5	
14	5 x 5	3.0	$^{+0.1}_{0}$
18	6 x 6	3.5	
19	6 x 6	3.5	
24	8 x 7	4.0	
28	8 x 7	4.0	
30	8 x 7	4.0	
35	10 x 8	5.0	
38	10 x 8	5.0	$^{+0.2}_{0}$
42	12 x 8	5.0	
48	14 x 9	5.5	
55	16 x 10	6.0	
65	18 x 11	7.0	

Albero uscita
Output shaft
Abtriebswelle

D	b x h	t_2	
11	4 x 4	1.8	
14	5 x 5	2.3	
18	6 x 6	2.8	$^{+0.1}_{0}$
19	6 x 6	2.8	
24	8 x 7	3.3	
25	8 x 7	3.3	
28	8 x 7	3.3	
30	8 x 7	3.3	
32	10 x 8	3.3	
35	10 x 8	3.3	
40	10 x 8	3.3	
42	12 x 8	3.3	
48	14 x 9	3.8	
50	14 x 9	3.8	$^{+0.2}_{0}$
55	16 x 10	4.3	
60	18 x 11	4.3	
65	18 x 11	4.4	
70	20 x 12	4.9	
80	22 x 14	5.4	
90	25 x 14	5.4	
100	28 x 16	6.4	
110	28 x 16	6.4	

1.0 RIDUTTORI A VITE SENZA FINE U
1.0 WORM GEARBOXES U
1.0 SCHNECKENGETRIEBE U

U

1.1	Caratteristiche tecniche	*Technical characteristics*	Technische Eigenschaften	C1
1.2	Designazione	*Designation*	Bezeichnungen	C3
1.2	Versioni	*Versions*	Ausführungen	C3
1.4	Lubrificazione	*Lubrication*	Schmierung	C7
1.5	Carichi radiali e assiali	*Axial and overhung loads*	Radiale und Axiale Belastungen	C8
1.6	Prestazioni riduttori	*Gearboxes performances*	Leistungen der Getriebe	C10
1.7	Prestazioni motoriduttori	*Gearmotors performances*	Leistungen der Getriebemotoren	C12
1.8	Dimensioni	*Dimensions*	Abmessungen	C18
1.9	Accessori	*Accessories*	Zubehör	C20

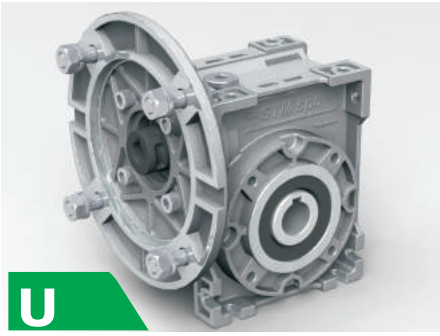

C

1.1 Caratteristiche tecniche

STM presenta un nuovo riduttore di moderna concezione a forma cubica.
Questa forma del riduttore permette universalità di fissaggio e modularità estrema per lo stoccaggio del prodotto finito: con l'adozione di un giunto d'accoppiamento al quale possono essere accoppiati tutti i motori Brushless e IEC si garantisce così un'ulteriore versatilità delle configurazioni possibili e l'eliminazione del fenomeno di fretting.
La carcassa è disegnata in modo da ottimizzare lo smaltimento del calore e semplificare le operazioni di pulizia, anche negli ambienti più ostili.

1.1 Technical characteristics

STM introduce a new range of cube-shaped worm gearboxes.
This execution is suitable for a wide variety of fixing possibilities and allows a better modularity of the components in stock.In fact, through an input coupling it is possible to connect all sizes IEC and brushless electric motors and enable a wide range of possible gearbox configurations as well as improving the overall quality by eliminating the fretting.
The body has been designed in order to optimize the heat dissipation and to simplify the cleaning of it, even in the most difficult environmental conditions.

1.1 Technische Eigenschaften

STM stellt ein neues modern gestaltetes Getriebe in kubischer Form vor.
Diese Getriebeform bietet universelle Befestigungsmöglichkeiten und ist äußerst anpassungsfähig bei der Lagerung des Endproduktes: durch die Verwendung einer Kupplung, an die alle bürstenlosen Motoren und IEC angeschlossen werden können, wird die Vielseitigkeit der möglichen Konfigurationen erhöht und die Beseitigung des Phänomens „Fressen“ sichergestellt.
Das Gehäuse ist so konzipiert, dass die Wärmeableitung optimiert ist und die Reinigungsarbeiten vereinfacht werden, und dies auch unter schwierigsten Bedingungen.

1.1 Caratteristiche tecniche

Carattestiche giunto STM

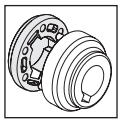

- Ingombri ***Ridotti***;
- Semplicità di connessione;
- ***NO*** Fretting;
- ***NO*** Vibrazioni;
- Progettato per garantire efficienza e affidabilità con servizi gravosi in presenza di urti e con numerosi avviamenti.

1.1 Technical characteristics

STM Special features - Coupling

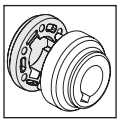

*-**Reduced** Sizes*
-Simplified connections
*-**No** fretting*
*-**No** vibrations*
-Designed in order to warrant efficiency and reliability with heavy duty in case of bumps and frequent start-upsSimplified connections

1.1 Technische Eigenschaften

Die STM Sondernmerkmale - Kupplung:

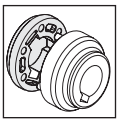

-Verringerter Platzbedarf;
-Einfacher Anschluss;
-Keine Abnutzung;
-Keine Vibrationen;
-Gewährleistet Effizienz und Zuverlässigkeit bei hoher Belastung, Stossbeeinträchtigung und zahlreichen Maschinen-Starts.

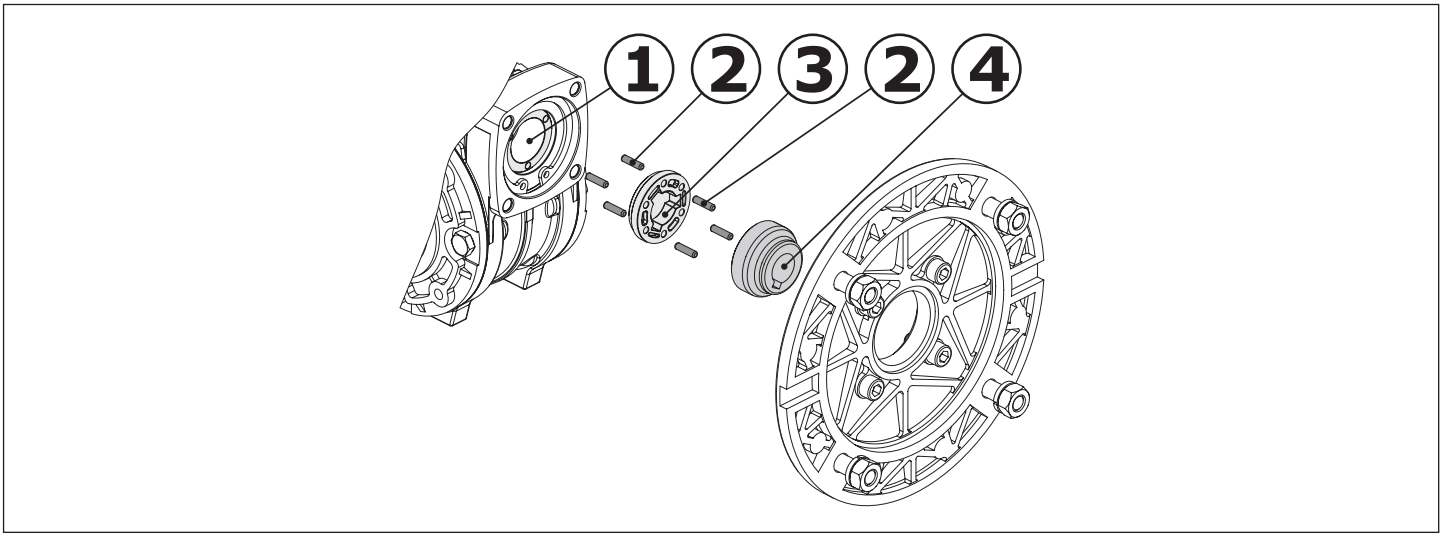

MATERIALE:
1 - Vite senza fine
Acciaio Cementazione;
2 - Pioli - - Acciaio per cuscinetti
3 - Giunto - Tecnopolimero PA 46
4 -Semigiunto - Acciaio da bonifica.

MANUTENZIONE:
-Facilità di Montaggio motore;
-Facilità di Smontaggio

MODULARITA':
-Possibilità di utilizzare il giunto sulle serie "**RMI**" - "**CRMI".**

TEMPI DI CONSEGNA:
-Maggiore modularità del prodotto;
-Stock a magazzino del prodottoassemblato.

MATERIAL:
1 - Worm gear – cementation steel
2 – Pin – bearing steel
3 - Coupling – techno polymer PA 46
4 – Coupling half - tempered steel

MAINTEINANCE:
-Easy motor assembly;
-Easy disassembly.

MODULARITY:
*Possibility of coupling's using specially those of **"RMI"** - "**CRMI" series.***

DELIVERY DATES
-Higher product's modularity
-Stock warehouse finished product.

MATERIAL:
1 – Schneckenwelle - Einsatzstahl
2 – Stifte – Lagerstahl
3 – Kupplung – Technopolymer PA 46
4 – Kupplungshälfte – Stahl wärmebehandelt

WARTUNG:
-Einfacher Motoreinbau;
-Einfacher Ausbau.

MODULARITÄT
Die Kupplung kann in den Serien „**RMI**" - „**CRMI...G**" verwendet werden.

LIEFERZEITEN:
-Größere Modularität des Produktes;
-Montiertes Produkt imLaberbestand

1.2 Designazione — *1.2 Designation* — 1.2 Bezeichnung

WEB: Reference Designation

Maschine	Typ Connection	Size	Output Version	Mounting Version	Output Flange	Reduction ratio	IEC type and Input Shaft	Input Version	Input Shaft	Designazione Motori *Designation Motors* Bezeichnung Motoren	Type Shaft Diameter	Shaft Diameter	Mounting Position Output Flange	Mounting positions	Position Terminal Box
00 M	01 Tycon	02 SIZE	03 OV	03a MV	03b OF	04 IR	05 IECT	06 IV	07 IS		14 TYPSD	15 SD	16 MPOF	17 MP	19 PMT

CODE: Example of order: "UMI 40 FA 1/7 G 71B5"

U	MI	40 50 63 75 90 110	— FA FB F.F.	—	—	Vedi tabelle prestazioni *See performance tables* *Siehe Leistungs-tabellen*	G	— N	80B5 ... 80B14	—	—	—	—	M1 M2 M3 M4 M5 M6	1 2 3 4 5 6 7 8
	I								—	Look *CT 18*	US	ø...	SIN		

00 M - Macchina — *M - Maschine* — M - Getriebe

U

01 TYPCON - Tipo connessione — *TYPCON - Type Connection* — TYPCON - Typ Verbindung

UI	UMI
	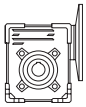

02 SIZE - Grandezza — *SIZE - Size* — SIZE - Größe

UI - UMI	40	50	63	75	90	110

03 03a 03b **UI UMI**

OV - Versione Uscita	*OV - Output Version*	OV - Abtriebausführung
MV - Versione Montaggio	*MV - Mounting Version*	MV - Bauversion
OF - Flangia Uscita	*OF - Output Flange*	OF - Flansche am Abtrieb

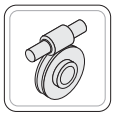

-

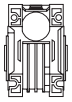

Universal foot

FA **FB**

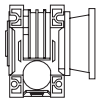

Flange mounted

F.F.

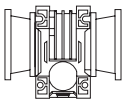

Flange mounted - "Two"

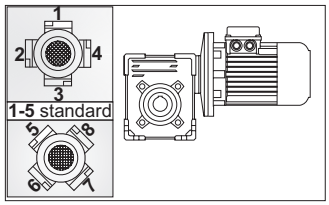

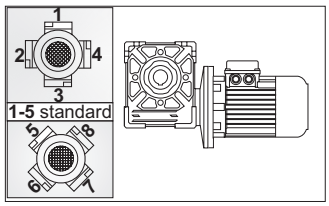

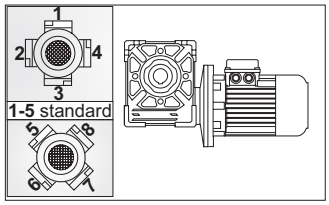

- **FA** **FB** **F.F.** Elenco versioni / Versions / Ausführungen

Il senso dell'elica è destro
The helix is right-hande
Die Schnecke ist rechtsgängig

Posizioni della Morsettiera
Position Terminal Box
Montagposition
Klemmenkasten

1.2 Designazione

04 IR- Rapporto di riduzione

(Vedi prestazioni). Tutti i valori dei rapporti sono approssimati. Per applicazioni dove necessita il valore esatto consultare il ns. servizio tecnico.

1.2 Designation

IR - Reduction ratio

(See ratings). Ratios are approximate values. If you need exact values for a specific application, please contact our Engineering.

1.2 Bezeichnung

IR - Übersetzungsverhältnis

(Siehe "Leistungen"). Bei allen Werten der Übersetzungen handelt es sich um approximative Wertangaben. Bei Applikationen, bei denen die exakte Wertangabe erforderlich ist, muss unser Technischer Kundendienst konsultiert werden.

05 06 07	**UMI**	**IECT - Tipo IEC e Albero Entrata**	***IECT - IEC type and Input Shaft***	**OV - IEC Typ und Antriebswelle**
		IV - Versione Entrata	***IV - Input Version***	**IV - Antriebausführung**
		IS - Albero Entrata	***IS - Input shaft***	**IS - Antriebswelle**

Possibili accoppiamenti con motori IEC - *Possible couplings with IEC motors* - Mögliche Verbindungen mit IEC-Motoren

	IECT	IV	IS	ir - (Rapporto di riduzione / Reduction ratio / Übersetzungsverhältnis)											
				5	7	10	15	20	28	40	49	56	70	80	100
40	G	—	71	**14/160** (B5) **- 14/105** (B14) **-** 14/140 - 14/120 - 14/90•											
			63	**11/140** (B5) **- 11/90•** (B14) **-** 11/160 - 11/120 - 11/105											
			56	**9/120** (B5) **- 9/160 -** 9/140 - 9/105 - 9/90•											
50	G	—	80	**19/120** (B14) **- 19/200** (B5) - 19/160 - 19/140 - 19/105• - 19/90•											
			71	**14/160** (B5) **- 14/105•** (B14) - 14/200 - 14/140 - 14/120 - 14/90•											
			63	**11/140** (B5) **- 11/90•** (B14) - 11/200 - 11/160 - 11/120 - 11/105•											
63	G	—	90	**24/200** (B5) **- 24/140** (B14) - 24/160 - 24/120 - 24/105•											
			80	**19/200** (B5) - **19/120** (B14) - 19/160 - 19/140 - 19/105•											
			71	**14/160** (B5) - **14/105•** (B14) - 14/200 - 14/140 - 14/120											
75	G	—	**112** (1)	—	**28/250** (B5) - **28/160** (B14) 28/140										
			100 (1)	—	**28/250** (B5) - **28/160** (B14) 28/140										
			90	—	**24/200** (B5) - **24/140** (B14) - 24/250 - 24/160 - 24/120•										
			80	—	**19/200** (B5) - **19/120** (B14)• - 19/250 - 19/160 - 19/140										
90	G	—	**112** (1)	—	**28/250** (B5) - **28/160** (B14)										
			100 (1)	—	**28/250** (B5) - **28/160** (B14)										
			90	—	**24/200** (B5) - **24/140** (B14) - 24/250 - 24/160 - 24/120										
			80	—	**19/200** (B5) - **19/120** (B14) - 19/250 - 19/160 - 19/140										
110	G	—	**132** (1)	—	**38/300 (B5)** - 38/250 - 38/160										
			112	—	**28/250 (B5) - 28/160 (B14)** - 28/200 - 28/300										
			100	—	**28/250 (B5) - 28/160 (B14) -** 28/200 - 28/300										
			90	—	**24/200 (B5)** - 24/250 - 24/160 - 24/300										

(1)ATTENZIONE!
(Vedere Paragrafo 1.12).

(1)WARNING!
(Look at chapter 1.12).

(1)ACHTUNG!
(s. S. 1.12).

Nella tab. sono riportate le grandezze motore accoppiabili (IEC) unitamente alle dimensioni albero/flangia motore standard
Legenda:
11/140 (B5): combinazioni albero/flangia standard
11/120 : combinazioni albero/flangia a richiesta

In table the possible shaft/flange dimensions IEC standard are listed.
Key:
11/140 *: standard shaft/flange combination*
11/120 : shaft/flange combinations upon request

In Tabelle sind die möglichen Welle/Flansch- Abmessungen IEC-Standard aufgelistet.
Legende:
11/140 : Standardkombinationen Welle/Flansch
11/120 : Sonderkombinationen Welle/Flansch

1.2 Designazione

1.2 Designation

1.2 Bezeichnung

IECT	**G**	Accoppiamento con Giunto / *Direct with coupling /* Direkte mit Kupplung
IV	—	Predisposto per accoppiamento con Unità Motrice IEC / *pre arrangement motor IEC /* geeignet für die Kombination mit Antriebseinheit IEC
	N	A richiesta / on Request / Auf Anfrage Predisposto per accoppiamento con Unità Motrice NEMA/ *pre arrangement motor NEMA /* geeignet für die Kombination mit Antriebseinheit NEMA - **CT 36 US GB**
IS	**...**	Grandezza IEC / *Size IEC /*

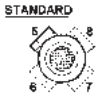

Posizione morsettiera - Vedere - 19 - PMT - Pagina C6
Terminal board position - Look - 19 - PMT - Page C6
Lage des Klemmenkastens - Siehe - 19 - PMT - Auf Seite C6

Designazione motore elettrico Se è richiesto un motoriduttore completo di motore è necessario riportare la designazione di quest'ultimo. A tale proposito consultare il ns. catalogo dei motori elettrici Electronic Line.	*Electric motor designation* *For applications requiring a gearmotor, motor designation must be specified.To this end, please refer to our Electronic Line electric motor catalogue.*	Bezeichnung des Elektromotors Wird ein Getriebemotor komplett mit Elektromotor angefordert, müssen dessen Daten angegeben werden. Diesbezüglich verweisen wir auf unseren Katalog der Elektromotoren "Electronic Line".

05 **06** **07**	**UI**	**IECT - Tipo IEC e Albero Entrata**	***IECT - IEC type and Input Shaft***	**OV - IEC Typ und Antriebswelle**
		IV - Versione Entrata	***IV - Input Version***	**IV - Antriebausführung**
		IS - Albero Entrata	***IS - Input shaft***	**IS - Antriebswelle**

— Nessuna indicazione = diametro standard;

— No indications = standard diameter;

— Keine Angabe = Standard-durchmesser

UI	**40**	**50**	**63**	**75**	**90**	**110**
	(∅ 11)	(∅ 14)	(∅ 18)	(∅ 24)	(∅ 24)	(∅ 28)

C

14 TYPSD - Tipo Albero uscita

— Nessuna indicazione = le dimensioni dell' albero sono secondo il sistema di misura SI (mm);

US = a richiesta
è possibile richiedere alberi con le dimensioni secondo il sistema di misura US (inch).
CT 36 US GB

TYPSD - Typ output shaft

— *No indications = The shaft dimensions are subject to the system of units SI (mm).*

US = On request
It's possible to request shafts dimensions according US measurement system (inch).

CT 36 US GB

TYPSD - Typ Abtriebwelle

— Keine Angabe = Die Wellendimensionen unterliegen dem Einheitensystem SI (mm)

US = Auf Anfrage
es ist möglich Wellen anzuforden, die den amerikanischen Abmessungen (inch) entsprechen.
CT 36 US GB

15 SD - Diametro Albero

Diametro albero:
— Nessuna indicazione = diametro foro standard.

SD - Shaft diameter

Shaft Diameter:
— No indications = standard hole diameter.

SD - Durchmesser Abtirebswelle

Wellendurchmesser:
— Keine Angabe = Standard-Bohrungsdurchmesser.

UI - UMI	40	50	63	75	90	110
Standard (mm)	18	25	25	28 (30)	35	42

1.2 Designazione

16 MPOF - Lato Flangia Uscita

— Nessuna indicazione = flangia uscita con montaggio destro (flange dal lato come indicato nelle figure);

SIN = flange uscita con montaggio sinistro (flange dal lato opposto alle figure indicate).

1.2 Designation

MPOF - Mounting Position Output

— No indication (standard) = output flange on right side (like indicated in the figures);

***SIN** = output flange on left side (flanges on the opposite side like indicated in figures).*

1.2 Bezeichnung

MPOF - Montageseite Abtiebsflansch

— Keine Angabe (Standard) = Abtriebs- flansch rechts (wie in den Abbildungen dargestellt)

SIN = Abtriebsflansch links (gegenüber der Position in den Katalogabbildungen).

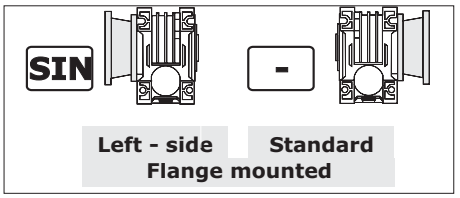

17 MP - Posizioni di montaggio

[M2, M3, M4, M5, M6] Posizioni di montaggio con indicazione dei tappi di livello, carico e scarico; se non specificato si considera standard la posizione **M1** (vedi par. 1.4)

MP - Mounting positions

***[M2, M3, M4, M5, M6]** Mounting position with indication of breatherm level and drain plugs; if not specified, standard position is **M1** (see par. 1.4).*

MP - Einbaulagen

Montageposition **[M2, M3, M4, M5, M6]** mit Angabe von . Entlüftung, Schaugläsern und Ablaßschraube. Wenn nicht näher spezifiziert, wird die Standard - position **M1** zugrunde gelegt (s. Abschnitt 1.4).

18 OPT-ACC. - Opzioni / *OPT-ACC - Options* / OPT-ACC. - Optionen

vedi par. 1.9 see pa. 1.9 s. Abschnitt 1.9	ACC1	AL	Alberi lenti - AL	Output shafts - AL	Abtriebswellen - AL
		AL_BU	Alberi lenti Bisporgenti - AL_BU	Double Output shafts - AL_BU	Beidseitige Abtriebswellen - AL_BU
		PROT.	Coperchio di protezione	Protection cover	Schultzvorrichtungdeckel
	ACC3	BRS_VKL	Braccio Reazione Semplice_con boccola_VKL	Torque arm - Single_with VKL_bushing	Drehmomentstütze - Normal_mit VKL - Buchse
	ACC9	ELSX	Vite senza fine - Elica Sinistra	Worm Geraboxe - Left helix	Linksgängige Schraubenlinie der Schneke
vedi Sezione A-1.12 see Section A-1.12 s. Abschnitt A-1.12	OPT.	OPT	Materiale degli anelli di tenuta	Materials of Seals	Dichtungsstoffe
		OPT1	Stato fornitura olio	Scope of the supply - Options - OIL	Optionen - Lieferzustand - Optionen - Öl
		OPT2	Verniciatura	Painting and surface protection	Lackierung und Oberflächenschutzl

19 PMT - Posizioni della Morsettiera

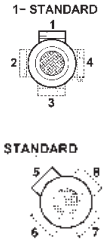

[2, 3, 4] Posizione della morsettiera del motore se diversa da quella standard (1).

N.B.
La configurazione standard della flangia at- tacco motore prevede 4 fori a 45°.

Per le flange contrassegnate con il simbolo (•) (**vedi pagina B10)** i fori per il fissaggio al motore sono disposti in croce (esempio +). Pertanto è opportuno valutare l'ingombro della morsettiera del motore che verrà installato in quanto essa verrà a trovarsi orientata a 45° rispetto agli assi. Per la scelta della posizione della morsettiera rispetto agli assi fare riferimento allo schema seguente (in cui la posizione 5 è quella standard):

PMT - Position Terminal Box

***[2, 3, 4]** Position of the motor terminal box if different from the standard one (1).*

Note.
The standard configuration for the 4 holes is 45° to the axles (like an x: see par 2.3).

*For the flanges marked with (•) (**see page B10)** the holes to fit the motor are on the axles (like a +). Therefore we suggest to check the dimensions of the terminal board of the motor as it will be at 45° to the axles. Please choose the terminal board position refering to the following sketch (in which n° 5 is the standard position):*

PMT - Montagposition Klemmenkasten

Montageposition Klemmenkasten **[2, 3, 4],** wenn abweichend von Standardposition [1] (für Motorgetriebe).

HINWEIS.
In der Standardkonfiguration sind die 4 Flansch- bohrungen im 45°-Winkel zu den Achsen angeordnet
Bei Flanschen, die mit (•) (**Siehe auf Seite B10)** gekennzeichnet sind, sind die Bohrungen auf den Achsen angeord- net (wie ein +). Es sollte deshalb der Platzbedarf des Motorklemmenkastens beachtet werden, da er sich in 45°-Position zu den Achsen befinden wird. Die Lage des Klemmenkastens des Motors wählen Sie bitte anhand der folgenden Skizze (Pos. 5 ist Standardposition):

1.4 Lubrificazione

1.4 Lubrication

1.4 Schmierung

Posizioni di montaggio
Mounting positions
Montagepositionen

UI - UMI

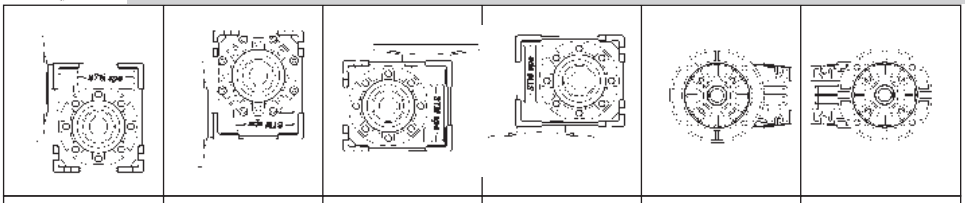

M1	M2	M3	M4	M5	M6

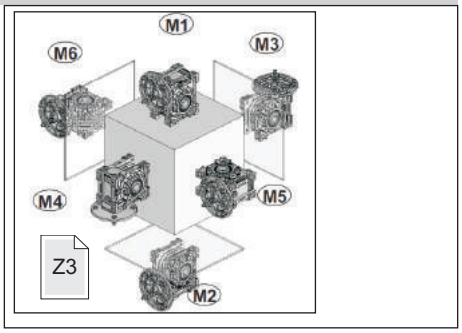

	Posizioni di montaggio - Mounting positions - Montagepositionen		
		Posizioni Positions Positionen	Prescrizioni da indicare in fase d'ordine Ordering requirements Anforderungen bei der Bestellung
UI UMI	40 50 63 75	M1-M2 M3-M4 M5-M6	**Non necessaria** ***Not necessary*** **Nicht erforderlich**
	90 110	M1-M2 M3-M4 M5-M6	**Necessaria** **Necessary** **Erforderlich**

M3-M4
Particolare attenzione va posta per i riduttori montati nelle posizioni M3 e M4 che sono forniti con il cuscinetto schermato.

M3-M4
Particular attention should be paid to worm gearboxes with a shielded bearing mounted in positions M3 and M4.

M3-M4
Besondere Aufmerksamkeit sollte den Getrieben zukommen, die in den Einbaulagen M3 und M4 montiert werden und mit abgeschirmtem Lager geliefert werden.

TARGHETTA - RIDUTTORE

NON NECESSARIA
Indicata sempre nella targhetta del riduttore la posizione di montaggio "M1".

NECESSARIA
La posizione richiesta è indicata nella targhetta del riduttore

Identification Plate - Gearbox

NOT NECESSARY
The mounting position is always indicated on the nameplate "M1".

NECESSARY
The indication it on the label of the gearbox

Typeschild - Getriebe

NICHT ERFORDERLICH
Die Einbaulage ist immer auf dem Typenschild angegeben "M1".

ERFORDERLICH
Findet man die angefragte Position auf dem Typenschild des Getriebe

Lub	Quantità di lubrificante - *Lubricant Quantity - Schmiermittelmenge - [Kg]*							
			M1	M2	M3	M4	M5	M6
UI UMI	UI-RMI	40	0.070					
	UI	50	0.170					
	UMI		0.130					
	UI	63	0.350					
	UMI		0.240					
	UI-UMI	75	0.450					
	UI-UMI	90	1.000	0.600				
		110	1.600	1.300				

OPT1	N°	Diameter	Type
INOIL_STD	1	1/4"	
	1		
	1		
	1		
	1		
	1		
	1	3/8"	

Attentione !:
Il tappo di sfiato è allegato solo nei riduttori che hanno più di un tappo olio

Warning!:
A breather plug is supplied only with worm gearboxes that have more than one oil plug

Achtung!:
Der Entlüftungsstopfen ist lediglich bei den Getrieben vorhanden, die über mehr als einen Ölfüllstopfen verfügen

Nota: Se in fase d'ordine la posizione di montaggio è omessa, il riduttore verrà fornito con i tappi predisposti per la posizione M1.

Eventuali forniture con predisposizioni tappi diverse da quella indicata in tabella, dovranno essere concordate.

Note: If the mounting position is not specified in the order, the worm gearbox supplied will have plugs pre-arranged for position M1.

The supply of gearboxes with different plug pre-arrangements has to be agreed with the manufacturer.

Anmerkung:Sollte in der Auftragsphase die Einbaulage nicht angegeben werden, wird das Getriebe mit Stopfen für die Einbaulage M1.

Lieferungen, die eine Auslegung hinsichtlich der Stopfen aufweisen, die von den Angaben in der Tabelle abweichen, müssen vorab vereinbart werden..

1.5 Carichi radiali e assiali

Quando la trasmissione del moto avviene tramite meccanismi che generano carichi radiali sull'estremità dell'albero,è necessario verificare che i valori risultanti non eccedono quelli indicati nelle tabelle.

Nella Tab. 2.5 sono riportati i valori dei carichi radiali ammissibili per l'albero veloce (Fr_1). Come carico assiale ammissibile contemporaneo si ha:

$$Fa_1 = 0.2 \times Fr_1$$

1.5 Axial and overhung loads

Should transmission movement determine radial loads on the angular shaft end, it is necessary to make sure that resulting values do not exceed the ones indicated in the tables.

In Table 2.5 permissible radial load for input shaft are listed (Fr_1). Contemporary permissible axial load is given by the following formula:

$$Fa_1 = 0.2 \times Fr_1$$

1.5 Radiale und Axiale Belastungen

Wird das Wellenende auch durch Radialkräfte belastet, so muß sichergestellt werden, daß die resultierenden Werte die in der Tabelle angegebenen nicht überschreiten.

In Tabelle 2.5 sind die Werte der zulässigen Radialbelastungen für die Antriebswelle (Fr_1) angegeben. Die Axialbelastung beträgt dann:

$$Fa_1 = 0.2 \times Fr_1$$

Tab. 2.5

UI

n_1 min^{-1}	Fr_1 (N)					
	UI					
	40	**50**	**63**	**75**	**90**	**110**
2800	187	272	357	510	700	850
1400	220	320	420	600	800	1000
900	250	350	460	660	900	1200
700	280	400	500	730	1000	1300
500	310	450	530	800	1100	1450

In Tab. 2.7 sono riportati i valori dei carichi radiali ammissibili per l'albero lento (Fr_2) . Come carico assiale ammissibile contemporaneo si ha:

$$Fa_2 = 0.2 \times Fr_2$$

In Table 2.7 permissible radial loads for output shaft a*re listed (Fr_2).*
Permissible axial load is given by the following formula:

$$Fa_2 = 0.2 \times Fr_2$$

In Tabelle 2.7 sind die Werte der zulässigen Radialbelastungen für die Abtriebswelle angegeben.
Als zulässige Axialbelastung gilt:

$$Fa_2 = 0.2 \times Fr_2$$

Tab. 2.7

UI
UMI

n_2 min^{-1}	Fr_2 (N)					
	UI - UMI					
	40	**50**	**63**	**75**	**90**	**110**
400	686	925	946	1400	1897	2168
280	808	1088	1114	1700	2232	2550
200	950	1280	1310	2000	2625	3000
140	1050	1450	1680	2300	2775	3150
93	1200	1620	1740	2600	3050	3600
70	1350	1850	1930	2800	3400	4150
50	1500	2100	2150	3400	4205	4850
35	1600	2230	2300	3700	4775	5700
29	1700	2400	2500	4100	5300	6200
25	1800	2580	2700	4300	5610	6600
20	1950	2700	2900	4700	6175	7200
18	2100	2850	3100	4900	6650	7800
14	2300	3200	3300	5200	7025	8250

A richiesta possono essere fornite versioni rinforzate con cuscinetti a rulli conici sulla corona in grado di sopportare carichi superiori a quelli ammessi dalle versioni normali.
Si veda a tal proposito la tabella 2.9, in cui sono riportati i valori dei carichi radiali e assiali ammissibili sull'albero uscita nel caso di cuscinetti conici sulla corona. Si consiglia, in questi casi, di adottare versioni flangiate, verificando che il carico assiale venga interamente assorbito dal cuscinetto alloggiato nella flangia di fissaggio.

In order to increase the load capacity of the gearboxes it is possible to fit taper roller bearings on to the output shaft. Such reinforced versions are available upon request.
With regard to this reinforced version, let see output radial and axial load values shown on tab. 2.9. It's advisable to use flange mounted versions and to make sure that the axial load is absorbed by the bearing, housed in the fixing flange.

Für größere Belastungen stehen auf Wunsch auch verstärkte Ausführungen mit Kegelrollenlagern für die Schneckenwelle zur Verfügung.
Tabelle 2.9 listet die zulässigen Radial- und Axiallasten bei Verwendung von Kegelrollenlagern auf. Es wird in diesen Fällen empfohlen, Flanschausführungen zu verwenden und sicherzustellen, daß die axiale Last vollständig vom Lager, das sich im Befestigungsflansch befindet, aufgenommen wird.

UI
UMI

Tab. 2.9

CARICHI RADIALI - ASSIALI CON CUSCINETTI CONICI SULLA CORONA
AXIAL AND OVERHUNG LOADS WITH TAPER ROLLER BEARINGS ON WORMWHEEL
RADIALE UND AXIALE BELASTUNGEN MIT KEGELROLLENLAGERN AUF DEM SCHNECKENRAD

n_2 (rpm)	UI - UMI											
	40		50		63		75		90		110	
	Fr_2	Fa_2	Fr_2	Fa_2	Fr_2	Fa_2	Fr_2	Fa_2	Fr_2	Fa_2	Fr_2	Fa_2
400	2076	2708	4603	5325	4693	5415	5415	6588	6543	8529	7671	9837
280	2185	2850	4845	5605	4940	5700	5700	6935	6888	8978	8075	10355
200	2300	3000	5100	5900	5200	6000	6000	7300	7250	9450	8500	10900
140	2300	3000	5600	6500	5750	6650	6700	8200	7900	10300	9200	11800
93	2300	3000	6300	7300	6500	7550	7500	9150	8400	10950	9200	11800
70	2300	3000	6550	7600	6200	7200	7600	9300	7850	10225	9200	11800
50	2300	3000	6900	8000	6900	8000	8700	10600	9250	12050	10600	13600
35	2300	3000	6900	8000	6900	8000	9000	11000	11450	14900	13900	13600
29	2300	3000	6900	8000	6900	8000	9000	11000	11900	15500	14800	17800
25	2300	3000	6900	8000	6900	8000	9000	11000	11900	15500	14800	19000
20	2300	3000	6900	8000	6900	8000	9000	11000	11900	15500	14800	19000
18	2300	3000	6900	8000	6900	8000	9000	11000	11900	15500	14800	19000

I carichi radiali indicati nelle tabelle si intendono applicati a metà della sporgenza dell'albero e sono riferiti ai riduttori operanti con fattore di servizio 1.
Valori intermedi relativi a velocità non riportate possono essere ottenuti per interpolazione considerando però che Fr_1 a 500 min^{-1} e Fr_2 a 14 min^{-1} rappresentano i carichi massimi consentiti.
Per i carichi non agenti sulla mezzeria dell'albero lento o veloce si ha:

a 0.3 della sporgenza:
$Fr_x = 1.25 \times Fr_{1-2}$
a 0.8 dalla sporgenza:
$Fr_x = 0.8 \times Fr_{1-2}$

The radial loads shown in the tables are applied on the centre line of the shaft extension and are related to gearboxes working with service factor 1.
Intermediate values of speeds that are not listed can be obtained through interpolation but it must be considered that Fr_1 at 500 min^{-1} and Fr_2 at 14 min^{-1} represent the maximum allowable loads.
For loads which are not applied on the centre line of the output or input shaft, following values will be obtained:

at 0.3 from extension:
$Fr_x = 1.25 \times Fr_{1-2}$
at 0.8 from extension:
$Fr_x = 0.8 \times Fr_{1-2}$

Bei den in der Tabelle angegebenen Ra dialbelastungen wird eine Krafteinwirkung auf die Mitte des Wellenendes zugrunde gelegt; außerdem arbeiten die Getriebe mit Betriebsfaktor 1. Zwischenwerte für nicht aufgeführte Drehzahlen können durch Interpolation ermittelt werden. Hierbei ist jedoch zu berücksichtigen, daß die Werte von Fr_1 bei 500 min^{-1} und von Fr_2 bei 14 min^{-1} die Maximalbelastungen repräsentieren.
Bei Lasten, die nicht auf die Mitte der Ab- bzw. Antriebswellen wirken, legt man folgende Werte zugrunde:

0.3 vom Wellenabsatz:
$Fr_x = 1.25 \times Fr_{1-2}$
0.8 vom Wellenabsatz:
$Fr_x = 0.8 \times Fr_{1-2}$

C

Tab. 2.11

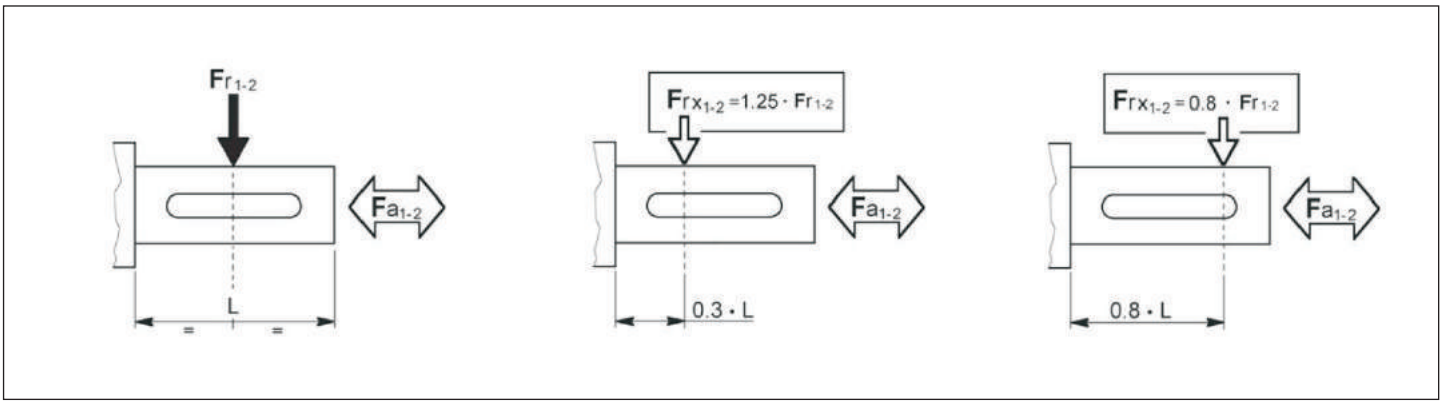

1.6 Prestazioni riduttori UI — *1.6 UI Gearboxes performances* — 1.6 Leistungen der UI-Getriebe

UI 40

Kg 2.1

ir	n_1 = 2800 min^{-1}				n_1 = 1400 min^{-1}				n_1 = 900 min^{-1}				n_1 = 500 min^{-1}				IEC
	n_2 min^{-1}	T_{2M} Nm	P kW	RD %	n_2 min^{-1}	T_{2M} Nm	P kW	RD %	n_2 min^{-1}	T_{2M} Nm	P kW	RD %	n_2 min^{-1}	T_{2M} Nm	P kW	RD %	
5	560	27	1.8	86	280	37	1.28	85	180	44	1.00	83	100	54	0.69	82	71-63-56
7	400	27	1.3	84	200	37	0.93	83	129	44	0.73	81	71	54	0.50	80	
10	280	31	1.1	83	140	42	0.76	81	90	49	0.58	79	50	59	0.40	78	
15	187	32	0.78	80	93	42	0.53	77	60	49	0.41	75	33	59	0.28	73	
20	140	29	0.56	76	70	37	0.37	73	45	43	0.29	70	25	51	0.20	67	
28	100	34	0.50	71	50	43	0.34	67	32	50	0.26	64	17.9	59	0.18	61	
40	70	32	0.36	65	35	40	0.24	60	23	45	0.19	56	12.5	53	0.13	53	
49	57	30	0.29	62	29	38	0.20	57	18.4	43	0.16	53	10.2	50	0.11	49	
56	50	28	0.24	60	25	36	0.17	54	16.1	40	0.13	51	8.9	47	0.09	47	
70	40	23	0.18	53	20	28	0.12	47	12.9	32	0.10	44	7.1	37	0.07	39	
80	35	21	0.15	50	17.5	26	0.11	44	11.3	29	0.09	40	6.3	34	0.06	36	
100	28	23	0.13	51	14.0	28	0.09	45	9.0	30	0.07	41	5.0	31	0.04	38	

UI 50

Kg 3.5

ir	n_1 = 2800 min^{-1}				n_1 = 1400 min^{-1}				n_1 = 900 min^{-1}				n_1 = 500 min^{-1}				IEC
	n_2 min^{-1}	T_{2M} Nm	P kW	RD %	n_2 min^{-1}	T_{2M} Nm	P kW	RD %	n_2 min^{-1}	T_{2M} Nm	P kW	RD %	n_2 min^{-1}	T_{2M} Nm	P kW	RD %	
5	560	45	3.0	87	280	65	2.2	86	180	75	1.7	85	100	95	1.18	84	80-71-63
7	400	50	2.5	85	200	68	1.7	84	129	81	1.3	83	71	100	0.91	82	
10	280	55	1.9	84	140	73	1.3	82	90	86	1.0	81	50	105	0.70	79	
15	187	58	1.4	82	93	76	0.93	80	60	89	0.71	79	33	106	0.48	77	
20	140	57	1.1	79	70	74	0.71	76	45	86	0.55	74	25	102	0.38	71	
28	100	62	0.88	74	50	80	0.60	70	32	92	0.46	67	17.9	109	0.32	64	
40	70	64	0.67	70	35	81	0.45	66	23	92	0.34	63	12.5	108	0.24	59	
49	57	57	0.51	67	29	72	0.34	63	18.4	82	0.27	59	10.2	96	0.19	55	
56	50	55	0.44	65	25	69	0.30	60	16.1	78	0.23	56	8.9	91	0.16	53	
70	40	52	0.36	61	20	64	0.24	56	12.9	72	0.19	52	7.1	84	0.13	48	
80	35	47	0.30	57	17.5	58	0.21	51	11.3	66	0.17	47	6.3	75	0.11	43	
100	28	42	0.23	54	14.0	52	0.16	48	9.0	59	0.13	44	5.0	60	0.08	40	

UI 63

Kg 6.0

ir	n_1 = 2800 min^{-1}				n_1 = 1400 min^{-1}				n_1 = 900 min^{-1}				n_1 = 500 min^{-1}				IEC
	n_2 min^{-1}	T_{2M} Nm	P kW	RD %	n_2 min^{-1}	T_{2M} Nm	P kW	RD %	n_2 min^{-1}	T_{2M} Nm	P kW	RD %	n_2 min^{-1}	T_{2M} Nm	P kW	RD %	
5	560	79	5.3	88	280	110	3.8	86	180	132	2.9	86	100	164	2.0	85	90-80-71
7	400	84	4.1	86	200	115	2.9	84	129	137	2.2	84	71	169	1.5	83	
10	280	93	3.2	84	140	126	2.2	83	90	149	1.7	81	50	182	1.2	80	
15	187	98	2.3	82	93	131	1.6	80	60	153	1.2	78	33	184	0.85	76	
20	140	104	1.9	80	70	136	1.3	77	45	158	0.99	75	25	189	0.69	72	
28	100	105	1.5	75	50	135	1.0	71	32	156	0.77	68	17.9	186	0.54	65	
40	70	113	1.2	71	35	145	0.79	67	23	166	0.61	64	12.5	195	0.43	60	
49	57	98	0.85	69	29	125	0.58	64	18.4	142	0.45	61	10.2	166	0.31	57	
56	50	101	0.79	67	25	127	0.54	62	16.1	145	0.42	58	8.9	169	0.29	54	
70	40	94	0.62	63	20	117	0.42	58	12.9	133	0.33	54	7.1	154	0.23	50	
80	35	88	0.53	61	17.5	110	0.37	55	11.3	124	0.29	51	6.3	144	0.20	47	
100	28	80	0.41	57	14.0	99	0.28	51	9.0	112	0.22	47	5.0	125	0.15	43	

ATTENZIONE!

Per situazioni con velocità di ingresso particolari attenersi alla tabella pagina A2.

I pesi riportati sono indicativi e possono variare in funzione della versione del riduttore.

N.B. Per i riduttori evidenziati dal doppio bordo nella colonna delle potenze è necessario verificare lo scambio termico del riduttore (come nel par. 1.7-A). Per maggiori informazioni contattare l'ufficio tecnico STM.

WARNING!

If in presence of non standard input speed please attain to the page A2.

Listed weights are for reference only and can vary according to the gearbox version.

NOTE. Please pay attention to the frame around the input power value: for this gearboxes it's important to check the thermal capacity (comp. chapter 1.7-A). For details please contact our technical department.

ACHTUNG!

Mit unstandardisierte Antriebsgeschwindigkeit bitte auf Seite A2.

Die angegebenen Gewichte sind Richtwerte und können je nach Getriebeversion etwas variieren.

HINWEIS. Sind in den Tabellen Nennleistungen eingerahmt, so ist die thermische Leistungsgrenze der Getriebe zu beachten (s. S. 1.7-A).
Für weitere Informationen wenden Sie sich bitte and unser technisches Büro.

1.6 Prestazioni riduttori UI — *1.6 UI Gearboxes performances* — 1.6 Leistungen der UI-Getriebe

UI 75

Kg 9.0

ir	n_1 = 2800 min^{-1}				n_1 = 1400 min^{-1}				n_1 = 900 min^{-1}				n_1 = 500 min^{-1}				IEC
	n_2 min^{-1}	T_{2M} Nm	P kW	RD %	n_2 min^{-1}	T_{2M} Nm	P kW	RD %	n_2 min^{-1}	T_{2M} Nm	P kW	RD %	n_2 min^{-1}	T_{2M} Nm	P kW	RD %	
7	400	146	7,11	86	200	205	5,05	85	129	241	3,86	84	71	298	2,69	83	100-112 90-80
10	280	163	5,66	85	140	220	3,86	84	90	261	2,98	83	50	320	2,08	81	
15	187	173	4,12	82	93	230	2,79	81	60	270	2,16	79	33	325	1,48	77	
20	140	161	2,93	81	70	220	2,07	78	45	245	1,52	76	25	293	1,05	73	
28	100	193	2,71	75	50	255	1,87	72	32	290	1,42	69	18	345	1,00	65	
40	70	176	1,80	72	35	230	1,24	68	23	258	0,94	65	13	303	0,65	61	
49	57	169	1,47	69	29	220	1,02	65	18	245	0,77	61	10	287	0,54	57	
56	50	153	1,17	69	25	200	0,82	64	16	219	0,61	60	9	256	0,43	56	
70	40	153	1,00	64	20	195	0,69	59	13	217	0,53	56	7	252	0,37	51	
80	35	145	0,86	62	18	185	0,61	56	11	205	0,46	52	6	237	0,32	48	
100	28	131	0,66	59	14	170	0,48	52	9	183	0,36	49	5	206	0,25	44	

UI 90

Kg 14.0

ir	n_1 = 2800 min^{-1}				n_1 = 1400 min^{-1}				n_1 = 900 min^{-1}				n_1 = 500 min^{-1}				IEC
	n_2 min^{-1}	T_{2M} Nm	P kW	RD %	n_2 min^{-1}	T_{2M} Nm	P kW	RD %	n_2 min^{-1}	T_{2M} Nm	P kW	RD %	n_2 min^{-1}	T_{2M} Nm	P kW	RD %	
7	400	230	11,2	86	200	320	7,8	86	129	382	6,1	85	71	474	4,2	84	100-112 90-80
10	280	255	8,8	85	140	347	6,0	85	90	412	4,6	84	50	505	3,2	82	
15	187	278	6,6	83	93	371	4,4	82	60	436	3,4	80	33	526	2,4	78	
20	140	290	5,2	82	70	381	3,5	80	45	444	2,7	78	25	531	1,9	75	
28	100	318	4,4	76	50	414	2,9	74	32	480	2,3	71	18	572	1,6	67	
40	70	316	3,2	73	35	406	2,1	71	23	466	1,6	67	13	550	1,1	64	
49	57	290	2,4	71	29	368	1,6	67	18	421	1,3	64	10	494	0,9	60	
56	50	272	2,0	71	25	344	1,3	68	16	392	1,0	63	9	458	0,7	59	
70	40	246	1,5	67	20	309	1,0	63	13	350	0,8	59	7	408	0,6	54	
80	35	238	1,4	65	18	297	0,9	60	11	336	0,7	56	6	390	0,5	52	
100	28	217	1,1	61	14	270	0,7	55	9	296	0,5	52	5	313	0,4	47	

UI 110

Kg 22.0

ir	n_1 = 2800 min^{-1}				n_1 = 1400 min^{-1}				n_1 = 900 min^{-1}				n_1 = 500 min^{-1}				IEC
	n_2 min^{-1}	T_{2M} Nm	P kW	RD %	n_2 min^{-1}	T_{2M} Nm	P kW	RD %	n_2 min^{-1}	T_{2M} Nm	P kW	RD %	n_2 min^{-1}	T_{2M} Nm	P kW	RD %	
7	400	341	16.6	86	200	478	11.6	86	129	577	9.1	85	71	720	6.4	84	132 112-100-90
10	280	391	13.5	85	140	537	9.3	85	90	640	7.2	84	50	788	5.0	82	
15	187	396	9.3	83	93	535	6.4	82	60	632	5.0	80	33	769	3.4	78	
20	140	465	8.3	82	70	617	5.6	81	45	722	4.3	79	25	869	3.0	76	
28	100	433	5.9	77	50	570	4.0	75	32	665	3.1	72	17.9	796	2.2	69	
40	70	493	4.9	74	35	638	3.2	72	23	737	2.6	68	12.5	873	1.8	65	
49	57	452	3.8	72	29	581	2.5	69	18.4	667	1.9	66	10.2	786	1.4	62	
56	50	364	2.7	71	25	465	1.8	69	16.1	532	1.4	64	8.9	624	0.97	60	
70	40	381	2.3	68	20	483	1.6	64	12.9	551	1.2	60	7.1	644	0.88	55	
80	35	390	2.2	66	17.5	491	1.5	62	11.3	559	1.1	58	6.3	651	0.80	53	
100	28	355	1.7	62	14.0	444	1.1	57	9.0	503	0.89	53	5.0	583	0.62	49	

ATTENZIONE!

Per situazioni con velocità di ingresso particolari attenersi alla tabella pagina A2.

I pesi riportati sono indicativi e possono variare in funzione della versione del riduttore.

N.B. Per i riduttori evidenziati dal doppio bordo nella colonna delle potenze è necessario verificare lo scambio termico del riduttore (come nel par. 1.7-A). Per maggiori informazioni contattare l'ufficio tecnico STM.

WARNING!

If in presence of non standard input speed please attain to the page A2.

Listed weights are for reference only and can vary according to the gearbox version.

NOTE. Please pay attention to the frame around the input power value: for this gearboxes it's important to check the thermal capacity (comp. chapter 1.7-A). For details please contact our technical department.

ACHTUNG!

Mit unstandardisierte Antriebsgeschwindigkeit bitte auf Seite A2.

Die angegebenen Gewichte sind Richtwerte und können je nach Getriebeversion etwas variieren.

HINWEIS. Sind in den Tabellen Nennleistungen eingerahmt, so ist die thermische Leistungsgrenze der Getriebe zu beachten (s. S. 1.7-A).
Für weitere Informationen wenden Sie sich bitte and unser technisches Büro.

1.7 Prestazioni motoriduttori

1.7 Leistungen der Getriebemotoren

0.09 kW

n_1= 2740 min^{-1} 56A 2
n_1= 1360 min^{-1} 56B 4
n_1= 860 min^{-1} 63B 6

n_2 min^{-1}	ir	T2 Nm	FS'		
49	28	12	3.6	**UMI 40**	56B 4
43	20	14	3.1	**UMI 40**	63B 6
34	40	15	2.6	**UMI 40**	56B 4
31	28	18	2.8	**UMI 40**	63B 6
28	49	18	2.2	**UMI 40**	56B 4
24	56	19	1.9	**UMI 40**	56B 4
19.4	70	21	1.3	**UMI 40**	56B 4
17.0	80	22	1.2	**UMI 40**	56B 4
15.4	56	29	1.4	**UMI 40**	63B 6
13.6	100	28	1.0	**UMI 40**	56B 4
12.3	70	31	1.0	**UMI 40**	63B 6

0.11 kW

n_1= 1360 min^{-1} 56C 4

n_2 min^{-1}	ir	T2 Nm	FS'		
68	20	11	3.3	**UMI 40**	56C 4
49	28	14	3.0	**UMI 40**	56C 4
34	40	19	2.2	**UMI 40**	56C 4
28	49	22	1.8	**UMI 40**	56C 4
24	56	23	1.5	**UMI 40**	56C 4
19.4	70	25	1.1	**UMI 40**	56C 4
17.0	80	27	1.0	**UMI 40**	56C 4
13.6	100	35	0.8	**UMI 40**	56C 4

0.13 kW

n_1= 2750 min^{-1} 56B 2
n_1= 1360 min^{-1} 63A 4
n_1= 860 min^{-1} 63C 6

n_2 min^{-1}	ir	T2 Nm	FS'		
550	5	2.1	13.0	**UMI 40**	56B 2
393	7	3	10.2	**UMI 40**	56B 2
393	7	3	9.8	**UMI 40**	56B 2
275	10	4	8.3	**UMI 40**	56B 2
275	10	4	8.0	**UMI 40**	56B 2
268	5	3.9	9.4	**UMI 40**	63A 4
194	7	5	7.0	**UMI 40**	63A 4
136	10	7	5.7	**UMI 40**	63A 4
91	15	11	4.0	**UMI 40**	63A 4
68	20	13	2.8	**UMI 40**	63A 4
56	49	14	2.2	**UMI 40**	56B 2
56	49	14	2.1	**UMI 40**	56B 2
49	28	17	2.5	**UMI 40**	63A 4
34	40	24	3.4	**UMI 50**	63A 4
34	40	22	1.8	**UMI 40**	63A 4
28	49	28	2.6	**UMI 50**	63A 4
28	49	25	1.5	**UMI 40**	63A 4
24	56	31	2.2	**UMI 50**	63A 4
24	56	28	1.3	**UMI 40**	63A 4
22	40	36	2.5	**UMI 50**	63C 6
22	40	32	1.4	**UMI 40**	63C 6
19.4	70	36	1.8	**UMI 50**	63A 4
19.4	70	30	0.9	**UMI 40**	63A 4
17.0	80	37	1.6	**UMI 50**	63A 4
17.0	80	32	0.8	**UMI 40**	63A 4
13.6	100	44	1.2	**UMI 50**	63A 4
12.3	70	53	1.4	**UMI 50**	63C 6
8.6	100	64	0.9	**UMI 50**	63C 6

0.18 kW

n_1= 2760 min^{-1} 63A 2
n_1= 1370 min^{-1} 63B 4
n_1= 870 min^{-1} 71A 6

n_2 min^{-1}	ir	T2 Nm	FS'		
554	5	2.7	10.0	**UMI 40**	63A 2
394	7	4	7.4	**UMI 40**	63A 2
276	10	5	6.0	**UMI 40**	63A 2
272	5	5.5	6.8	**UMI 40**	63B 4
196	7	7	5.1	**UMI 40**	63B 4
137	10	10	4.1	**UMI 40**	63B 4
124	7	11	3.9	**UMI 40**	71A 6
91	15	14	2.9	**UMI 40**	63B 4
69	20	18	2.0	**UMI 40**	63B 4
58	15	22	2.2	**UMI 40**	71A 6
49	28	25	3.3	**UMI 50**	63B 4
49	28	24	1.8	**UMI 40**	63B 4
44	20	29	2.9	**UMI 50**	71A 6
44	20	28	1.6	**UMI 40**	71A 6
34	40	33	2.4	**UMI 50**	63B 4
34	40	30	1.3	**UMI 40**	63B 4
28	49	39	1.9	**UMI 50**	63B 4
28	49	35	1.1	**UMI 40**	63B 4
24	56	42	1.6	**UMI 50**	63B 4
24	56	38	0.9	**UMI 40**	63B 4
19.6	70	49	1.3	**UMI 50**	63B 4
17.1	80	51	1.1	**UMI 50**	63B 4
15.5	56	64	2.3	**UMI 63**	71A 6
15.5	56	62	1.3	**UMI 50**	71A 6
13.7	100	60	0.9	**UMI 50**	63B 4
12.4	70	75	1.8	**UMI 63**	71A 6
12.4	70	72	1.0	**UMI 50**	71A 6
10.9	80	81	1.5	**UMI 63**	71A 6
10.9	80	74	0.9	**UMI 50**	71A 6
8.7	100	93	1.2	**UMI 63**	71A 6

0.22 kW

n_1= 1400 min^{-1} 63C 4

n_2 min^{-1}	ir	T2 Nm	FS'		
272	5	6.6	5.6	**UMI 40**	63C 4
200	7	9	4.2	**UMI 40**	63C 4
140	10	12	3.5	**UMI 40**	63C 4
93	15	17	2.4	**UMI 40**	63C 4
70	20	22	1.7	**UMI 40**	63C 4
50	28	29	2.7	**UMI 50**	63C 4
50	28	28	1.5	**UMI 40**	63C 4
35	40	40	2.0	**UMI 50**	63C 4
35	40	36	1.1	**UMI 40**	63C 4
29	49	46	1.6	**UMI 50**	63C 4
29	49	42	0.9	**UMI 40**	63C 4
25	56	50	1.4	**UMI 50**	63C 4
20	70	59	1.1	**UMI 50**	63C 4

0.25 kW

n_1= 2790 min^{-1} 63B 2
n_1= 1370 min^{-1} 71A 4
n_1= 870 min^{-1} 71B 6

n_2 min^{-1}	ir	T2 Nm	FS'		
564	5	3.6	7.5	**UMI 40**	63B 2
399	7	5	5.4	**UMI 40**	63B 2
282	5	7.2	5.1	**UMI 40**	71A 4
279	10	7	4.4	**UMI 40**	63B 2
196	7	10	6.6	**UMI 50**	71A 4
196	7	10	3.7	**UMI 40**	71A 4
137	10	14	5.1	**UMI 50**	71A 4
137	10	14	3.0	**UMI 40**	71A 4
124	7	16	5.1	**UMI 50**	71B 6
124	7	16	2.8	**UMI 40**	71B 6
91	15	21	3.6	**UMI 50**	71A 4
91	15	20	2.1	**UMI 40**	71A 4
69	20	26	2.8	**UMI 50**	71A 4
69	20	25	1.5	**UMI 40**	71A 4
58	15	33	2.7	**UMI 50**	71B 6
58	15	31	1.6	**UMI 40**	71B 6
49	28	34	2.3	**UMI 50**	71A 4
49	28	33	1.3	**UMI 40**	71A 4
44	20	41	2.1	**UMI 50**	71B 6
44	20	38	1.1	**UMI 40**	71B 6
34	40	47	3.1	**UMI 63**	71A 4
34	40	46	1.8	**UMI 50**	71A 4
31	28	52	3.0	**UMI 63**	71B 6
31	28	51	1.8	**UMI 50**	71B 6
31	28	49	1.0	**UMI 40**	71B 6
28	49	55	2.3	**UMI 63**	71A 4
28	49	54	1.3	**UMI 50**	71A 4
24	56	61	2.1	**UMI 63**	71A 4
24	56	59	1.2	**UMI 50**	71A 4
22	40	70	2.4	**UMI 63**	71B 6
22	40	69	1.3	**UMI 50**	71B 6
19.6	70	71	1.7	**UMI 63**	71A 4
19.6	70	68	0.9	**UMI 50**	71A 4
17.1	80	77	1.4	**UMI 63**	71A 4
17.1	80	71	0.8	**UMI 50**	71A 4
15.5	56	89	1.6	**UMI 63**	71B 6
15.5	56	86	0.9	**UMI 50**	71B 6
13.7	100	89	1.1	**UMI 63**	71A 4
12.4	70	104	1.3	**UMI 63**	71B 6
10.9	80	112	1.1	**UMI 63**	71B 6

0.37 kW

n_1= 2790 min^{-1} 63C 2
n_1= 2790 min^{-1} 71A 2
n_1= 1380 min^{-1} 71B 4
n_1= 910 min^{-1} 80A 6

n_2 min^{-1}	ir	T2 Nm	FS'		
572	5	5.3	5.0	**UMI 40**	71A 2
560	5	5.4	5.0	**UMI 40**	63C 2
399	7	7	3.6	**UMI 40**	71A 2
399	7	7	3.6	**UMI 40**	63C 2
279	10	11	2.9	**UMI 40**	71A 2
279	10	11	2.9	**UMI 40**	63C 2
274	5	11	3.4	**UMI 40**	71B 4
197	7	15	4.5	**UMI 50**	71B 4
197	7	15	2.5	**UMI 40**	71B 4
186	15	16	3.7	**UMI 50**	71A 2
186	15	15	2.1	**UMI 40**	71A 2
186	15	15	2.1	**UMI 40**	63C 2

1.7 Prestazioni motoriduttori

1.7 Gearmotors performances

1.7 Leistungen der Getriebemotoren

0.37 kW

n_1= 2790 min^{-1} — 63C 2
n_1= 2790 min^{-1} — 71A 2
n_1= 1380 min^{-1} — 71B 4
n_1= 910 min^{-1} — 80A 6

n_2 min^{-1}	ir	T2 Nm	FS'		
140	20	20	2.8	**UMI 50**	71A 2
140	20	19	1.5	**UMI 40**	71A 2
140	20	19	1.5	**UMI 40**	63C 2
138	10	21	3.5	**UMI 50**	71B 4
138	10	21	2.0	**UMI 40**	71B 4
92	15	31	2.5	**UMI 50**	71B 4
92	15	30	1.4	**UMI 40**	71B 4
61	15	46	5.7	**UMI 75**	80A 6
69	20	39	3.4	**UMI 63**	71B 4
69	20	39	1.9	**UMI 50**	71B 4
69	20	37	1.0	**UMI 40**	71B 4
49	28	51	2.7	**UMI 63**	71B 4
49	28	50	1.6	**UMI 50**	71B 4
49	28	48	0.9	**UMI 40**	71B 4
35	40	69	2.1	**UMI 63**	71B 4
45	20	60	3.9	**UMI 75**	80A 6
35	40	68	1.2	**UMI 50**	71B 4
33	28	76	3.7	**UMI 75**	80A 6
28	49	80	1.6	**UMI 63**	71B 4
28	49	79	0.9	**UMI 50**	71B 4
25	56	89	1.4	**UMI 63**	71B 4
25	56	86	0.8	**UMI 50**	71B 4
23	40	104	4,5	**UMI 90**	80A 6
23	40	104	2.4	**UMI 75**	80A 6
20	70	104	1.1	**UMI 63**	71B 4
19	49	122	3,5	**UMI 90**	80A 6
19	49	120	2.0	**UMI 75**	80A 6
17	80	113	1.0	**UMI 63**	71B 4
16	56	137	2,9	**UMI 90**	80A 6
16	56	135	1,6	**UMI 75**	80A 6
13	70	160	2,2	**UMI 90**	80A 6
13	70	155	1,4	**UMI 75**	80A 6
11	80	174	1,9	**UMI 90**	80A 6
11	80	171	1,2	**UMI 75**	80A 6
9	100	202	1,5	**UMI 90**	80A 6
9	100	198	0,9	**UMI 75**	80A 6

0.55 kW

n_1= 2800 min^{-1} — 71B 2
n_1= 1380 min^{-1} — 71C 4
n_1= 1390 min^{-1} — 80A 4
n_1= 910 min^{-1} — 80B 6

n_2 min^{-1}	ir	T2 Nm	FS'		
572	5	7.9	3.4	**UMI 40**	71B 2
572	5	8.0	5.6	**UMI 50**	71B 2
400	7	11	4.5	**UMI 50**	71B 2
400	7	11	2.4	**UMI 40**	71B 2
286	5	15.8	4.1	**UMI 50**	80A 4
280	5	15.9	2.3	**UMI 40**	71C 4
280	5	16.1	4.0	**UMI 50**	71C 4
280	10	16	3.5	**UMI 50**	71B 2
280	10	16	2.0	**UMI 40**	71B 2
199	7	22	3.1	**UMI 50**	80A 4
197	7	22	3.0	**UMI 50**	71C 4
197	7	22	1.7	**UMI 40**	71C 4
187	15	23	1.4	**UMI 40**	71B 2
140	20	29	1.0	**UMI 40**	71B 2
139	10	32	7.0	**UMI 75**	80A 4
139	10	31	2.4	**UMI 50**	80A 4
138	10	31	2.3	**UMI 50**	71C 4

0.55 kW

n_1= 2800 min^{-1} — 71B 2
n_1= 1380 min^{-1} — 71C 4
n_1= 1390 min^{-1} — 80A 4
n_1= 910 min^{-1} — 80B 6

n_2 min^{-1}	ir	T2 Nm	FS'		
138	10	31	1.4	**UMI 40**	71C 4
130	7	34	7.0	**UMI 75**	80B 6
130	7	34	2.4	**UMI 50**	80B 6
100	28	39	2.7	**UMI 63**	71B 2
100	28	39	1.6	**UMI 50**	71B 2
93	15	46	5.0	**UMI 75**	80A 4
93	15	45	2.9	**UMI 63**	80A 4
93	15	45	1.7	**UMI 50**	80A 4
92	15	46	1.7	**UMI 50**	71C 4
92	15	44	1.0	**UMI 40**	71C 4
70	20	60	3.7	**UMI 75**	80A 4
70	20	58	2.3	**UMI 63**	80A 4
70	20	57	1.3	**UMI 50**	80A 4
69	20	58	1.3	**UMI 50**	71C 4
61	15	69	6,3	**UMI 90**	80B 6
61	15	68.4	3.8	**UMI 75**	80B 6
50	28	78	5,3	**UMI 90**	80A 4
50	28	76	3.3	**UMI 75**	80A 4
50	28	75	1.8	**UMI 63**	80A 4
50	28	74	1.1	**UMI 50**	80A 4
49	28	76	1.8	**UMI 63**	71C 4
49	28	75	1.1	**UMI 50**	71C 4
46	20	90	4,9	**UMI 90**	80B 6
46	20	88	2.6	**UMI 75**	80B 6
46	20	87	1.8	**UMI 63**	80B 6
46	20	85	1.0	**UMI 50**	80B 6
35	40	107	3,8	**UMI 90**	80A 4
35	40	102	2.2	**UMI 75**	80A 4
35	40	101	1.4	**UMI 63**	80A 4
35	40	102	1.4	**UMI 63**	71C 4
35	40	100	0.8	**UMI 50**	71C 4
28	49	124	3,0	**UMI 90**	80A 4
28	49	120	1.8	**UMI 75**	80A 4
28	49	119	1.1	**UMI 63**	80A 4
28	49	119	1.0	**UMI 63**	71C 4
25	56	144	2,4	**UMI 90**	80A 4
25	56	138	1.5	**UMI 75**	80A 4
25	56	131	1.0	**UMI 63**	80A 4
25	56	132	1.0	**UMI 63**	71C 4
20	70	167	1,9	**UMI 90**	80A 4
20	70	161	1,2	**UMI 75**	80A 4
19	49	181	2,3	**UMI 90**	80B 6
19	49	178	1,4	**UMI 75**	80B 6
17	80	181	1,6	**UMI 90**	80A 4
17	80	178	1,0	**UMI 75**	80A 4
16	56	204	1,9	**UMI 90**	80B 6
16	56	200	1,0	**UMI 75**	80B 6
14	100	208	1,3	**UMI 90**	80A 4
14	100	208	0,8	**UMI 75**	80A 4
13	70	238	1,5	**UMI 90**	80B 6
13	70	230	0,9	**UMI 75**	80B 6
11	80	259	1,3	**UMI 90**	80B 6
11	80	254	0,8	**UMI 75**	80B 6
9	100	300	1,0	**UMI 90**	80B 6

0.75 kW

n_1= 2820 min^{-1} — 71C 2
n_1= 2820 min^{-1} — 80A 2
n_1= 1390 min^{-1} — 80B 4
n_1= 910 min^{-1} — 80C 6
n_1= 920 min^{-1} — 90S 6

n_2 min^{-1}	ir	T2 Nm	FS'		
572	5	10.9	4.1	**UMI 50**	80A 2
562	5	11	2.5	**UMI 40**	71C 2
562	5	11.1	4.0	**UMI 50**	71C 2
403	7	15	3.3	**UMI 50**	80A 2
400	7	15	3.3	**UMI 50**	71C 2
286	5	21.5	3.0	**UMI 50**	80B 4
282	10	21	2.6	**UMI 50**	80A 2
280	10	21	2.6	**UMI 50**	71C 2
199	7	31	6.7	**UMI 75**	80B 4
199	7	30	3.8	**UMI 63**	80B 4
199	7	30	2.2	**UMI 50**	80B 4
139	10	43	5.1	**UMI 75**	80B 4
139	10	43	2.9	**UMI 63**	80B 4
139	10	42	1.7	**UMI 50**	80B 4
131	7	46	5.1	**UMI 75**	90S 6
131	7	46	3.0	**UMI 63**	90S 6
101	28	55	3.4	**UMI 75**	80A 2
101	28	53	2.0	**UMI 63**	80A 2
101	28	53	1.2	**UMI 50**	80A 2
100	28	54	2.0	**UMI 63**	71C 2
100	28	53	1.2	**UMI 50**	71C 2
93	15	63	3.7	**UMI 75**	80B 4
93	15	62	2.1	**UMI 63**	80B 4
93	15	62	1.2	**UMI 50**	80B 4
70	20	82	4,6	**UMI 90**	80B 4
70	20	81	2.7	**UMI 75**	80B 4
70	20	79	1.7	**UMI 63**	80B 4
70	20	78	0.9	**UMI 50**	80B 4
50	28	107	3,9	**UMI 90**	80B 4
50	28	103	2.4	**UMI 75**	80B 4
50	28	102	1.3	**UMI 63**	80B 4
35	40	146	2,8	**UMI 90**	80B 4
35	40	139	1.6	**UMI 75**	80B 4
35	40	138	1.0	**UMI 63**	80B 4
28	49	169	2,2	**UMI 90**	80B 4
28	49	169	1,3	**UMI 75**	80B 4
25	56	196	1,8	**UMI 90**	80B 4
25	56	188	1,1	**UMI 75**	80B 4
23	40	211	2,2	**UMI 90**	80C 6
23	40	211	1,2	**UMI 75**	80C 6
20	70	227	1,4	**UMI 90**	80B 4
20	70	220	0,9	**UMI 75**	80B 4
19	49	247	1,7	**UMI 90**	80C 6
19	49	243	1,0	**UMI 75**	80C 6
17	80	247	1,2	**UMI 90**	80B 4
17	80	243	0,8	**UMI 75**	80B 4
16	56	279	1,9	**UMI 110**	90S 6
16	56	278	1,4	**UMI 90**	80C 6
16	56	273	0,8	**UMI 75**	80C 6
14	100	283	1,0	**UMI 90**	80B 4
13	70	327	1,7	**UMI 110**	90S 6
13	70	325	1,1	**UMI 90**	80C 6
11	80	361	1,5	**UMI 110**	90S 6
11	80	353	1,0	**UMI 90**	80C 6
9	100	409	0,7	**UMI 90**	80C 6

1.7 Prestazioni motoriduttori

0.88 kW — n_1= 1350 min^{-1} — 80C 4

n_2 min^{-1}	ir	T2 Nm	FS'		
282	5	25.6	2.5	**UMI 50**	80C 4
282	5	25.6	4.3	**UMI 63**	80C 4
193	7	37	5.5	**UMI 75**	80C 4
193	7	37	3.1	**UMI 63**	80C 4
193	7	37	1.9	**UMI 50**	80C 4
135	10	52	4.2	**UMI 75**	80C 4
135	10	52	2.4	**UMI 63**	80C 4
135	10	51	1.4	**UMI 50**	80C 4
90	15	75	3.0	**UMI 75**	80C 4
90	15	75	1.8	**UMI 63**	80C 4
90	15	75	1.0	**UMI 50**	80C 4
68	20	100	3,8	**UMI 90**	80C 4
68	20	98	2.2	**UMI 75**	80C 4
68	20	96	1.4	**UMI 63**	80C 4
48	28	129	3,2	**UMI 90**	80C 4
48	28	125	2.0	**UMI 75**	80C 4
48	28	124	1.1	**UMI 63**	80C 4
34	40	177	2,3	**UMI 90**	80C 4
34	40	168	1.3	**UMI 75**	80C 4
34	40	167	0.9	**UMI 63**	80C 4
28	49	204	1,1	**UMI 75**	80C 4
28	49	204	1,8	**UMI 90**	80C 4
24	56	227	0,9	**UMI 75**	80C 4
24	56	237	1,5	**UMI 90**	80C 4
19	70	266	0,7	**UMI 75**	80C 4
19	70	275	1,1	**UMI 90**	80C 4
17	80	299	1,0	**UMI 90**	80C 4
14	100	342	0,8	**UMI 90**	80C 4

1.1 kW — n_1= 2830 min^{-1} — 80B 2; n_1= 1390 min^{-1} — 80D 4; n_1= 1400 min^{-1} — 90S 4; n_1= 920 min^{-1} — 90L 6

570	5	16.2	4.9	**UMI 63**	80B 2
570	5	16	2.8	**UMI 50**	80B 2
404	7	22	6.4	**UMI 75**	80B 2
404	7	22	3.8	**UMI 63**	80B 2
404	7	22	2.3	**UMI 50**	80B 2
286	5	31.6	3.5	**UMI 63**	90 S4
283	10	32	5.0	**UMI 75**	80B 2
283	10	31	3.0	**UMI 63**	80B 2
283	10	31	1.8	**UMI 50**	80B 2
280	5	32.3	3.4	**UMI 63**	80D 4
280	5	32.3	2.0	**UMI 50**	80D 4
200	7	45	4.6	**UMI 75**	90S 4
200	7	44	2.6	**UMI 63**	90S 4
199	7	45	4.6	**UMI 75**	80D 4
199	7	44	2.6	**UMI 63**	80D 4
189	15	46	3.7	**UMI 75**	80B 2
189	15	46	2.1	**UMI 63**	80B 2
189	15	46	1.3	**UMI 50**	80B 2
142	20	60	2.6	**UMI 75**	80B 2

N.B.
Tutte le potenze indicate si riferiscono alla potenza meccanica dei riduttori.
Per i riduttori contrassegnati con **(*)** è opportuno effettuare la verifica della potenza limite termico secondo le indicazioni riportate nel par. 1.7-A

1.7 Gearmotors performances

1.1 kW — n_1= 2830 min^{-1} — 80B 2; n_1= 1390 min^{-1} — 80D 4; n_1= 1400 min^{-1} — 90S 4; n_1= 920 min^{-1} — 90L 6

n_2 min^{-1}	ir	T2 Nm	FS'		
142	20	59	1.0	**UMI 50***	80B 2
140	10	63	3.5	**UMI 75**	80D 4
140	10	62	2.0	**UMI 63**	90S 4
139	10	64	5,4	**UMI 90**	80D 4
139	10	63	3.5	**UMI 75**	80D 4
139	10	63	2.0	**UMI 63**	80D 4
139	10	62	1.2	**UMI 50**	80D 4
131	7	68	5,6	**UMI 90**	90L 6
131	7	67	3.5	**UMI 75**	90L 6
131	7	67	2.0	**UMI 63**	90L 6
93	15	93	4,0	**UMI 90**	80D 4
93	15	91	2.5	**UMI 75**	80D 4
93	15	90	1.5	**UMI 63**	90S 4
93	15	91	1.4	**UMI 63**	80D 4
93	15	91	0.8	**UMI 50**	80D 4
70	20	121	3,2	**UMI 90**	80D 4
70	20	118	1.9	**UMI 75**	80D 4
70	20	116	1.2	**UMI 63**	90S 4
70	20	116	1.2	**UMI 63**	80D 4
61	15	137	3,2	**UMI 90**	90L 6
61	15	135	1.9	**UMI 75**	90L 6
61	15	134	1.1	**UMI 63**	90L 6
50	28	157	2,6	**UMI 90**	80D 4
50	28	150	1.6	**UMI 75**	80D 4
50	28	149	0.9	**UMI 63**	90S 4
50	28	150	0.9	**UMI 63**	80D 4
46	20	178	2,5	**UMI 90**	90L 6
46	20	172	1.3	**UMI 75**	90L 6
46	20	171	0.9	**UMI 63**	90L 6
35	40	216	3.0	**UMI 110**	90S 4
35	40	213	1.9	**UMI 90**	90S 4
29	49	254	2.3	**UMI 110**	90S 4
29	49	246	1.1	**UMI 90**	90S 4
29	49	234	1.0	**UMI 75**	90S 4
25	56	290	1.6	**UMI 110**	90S 4
25	56	286	1,2	**UMI 90**	90S 4
25	56	288	1,2	**UMI 90**	80D 4
23	40	306	0,8	**UMI 75**	90L 6
23	40	306	1,5	**UMI 90**	90L 6
20	70	336	1.4	**UMI 110**	90S 4
20	70	331	0,9	**UMI 90**	90S 4
20	70	333	0,9	**UMI 90**	80D 4
19	49	358	1,2	**UMI 90**	90L 6
18	80	360	0,8	**UMI 90**	90S 4
17	80	372	1.3	**UMI 110**	90S 4

NOTE.
The indicated power is based on the mechanical capacities of the gearboxes.
For the gearboxes marked with (*) it is aslo necessary to obey the therminal capacity like shown on chapter 1.7-A.

1.7 Leistungen der Getriebemotoren

1.5 kW — n_1= 2830 min^{-1} — 80C 2; n_1= 2830 min^{-1} — 90S 2; n_1= 1400 min^{-1} — 90L 4; n_1= 925 min^{-1} — 90LB 6; n_1= 940 min^{-1} — 100A 6

n_2 min^{-1}	ir	T2 Nm	FS'		
576	5	21.9	3.6	**UMI 63**	90S 2
574	5	22	3.6	**UMI 63**	80C 2
574	5	21.7	2.0	**UMI 50**	80C 2
404	7	30	7,5	**UMI 90**	90S 2
404	7	31	4.7	**UMI 75**	90S 2
404	7	31	4.7	**UMI 75**	80C 2
404	7	30	2.8	**UMI 63**	90S 2
404	7	30	2.8	**UMI 63**	80C 2
286	5	43.1	2.5	**UMI 63**	90L 4
283	10	43	5,9	**UMI 90**	90S 2
283	10	43	3.7	**UMI 75**	90S 2
283	10	43	3.7	**UMI 75**	80C 2
283	10	43	2.2	**UMI 63**	90S 2
283	10	43	2.2	**UMI 63**	80C 2
200	7	62	5,2	**UMI 90**	90L 4
200	7	61	3.4	**UMI 75**	90L 4
200	7	60	1.9	**UMI 63**	90L 4
189	15	63	4,4	**UMI 90**	80C 2
189	15	62	2.7	**UMI 75**	90S 2
189	15	62	2.7	**UMI 75**	80C 2
189	15	62	1.6	**UMI 63**	90S 2
189	15	62	1.6	**UMI 63**	80C 2
140	10	87	4,0	**UMI 90**	90L 4
140	10	86	2.6	**UMI 75**	90L 4
140	10	85	1.5	**UMI 63**	90L 4
93	15	126	2,9	**UMI 90**	90L 4
93	15	124	1.9	**UMI 75**	90L 4
93	15	123	1.1	**UMI 63**	90L 4
70	20	164	2,3	**UMI 90**	90L 4
70	20	160	1.4	**UMI 75**	90L 4
70	20	158	0.9	**UMI 63**	90L 4
62	15	183	3.5	**UMI 110**	90LB 6
62	15	186	2,3	**UMI 90**	90LB 6
62	15	184	1,4	**UMI 75**	90LB 6
58	49	176	1,6	**UMI 90**	80C 2
58	49	176	1,6	**UMI 90**	90S 2
58	49	176	0,9	**UMI 75***	80C 2
58	49	176	0,9	**UMI 75***	90S 2
51	56	201	1,4	**UMI 90**	80C 2
51	56	201	1,4	**UMI 90**	90S 2
50	28	212	2,0	**UMI 90**	90L 4
50	28	212	1,2	**UMI 75**	90L 4
46	20	241	3.0	**UMI 110**	90LB 6
46	20	242	1,8	**UMI 90**	90LB 6
46	20	238	1,0	**UMI 75**	90LB 6
41	70	237	1,0	**UMI 90**	80C 2
41	70	237	1,0	**UMI 90**	90S 2
35	40	295	2.2	**UMI 110**	90L 4
35	40	291	1,4	**UMI 90**	90L 4
35	40	287	0,8	**UMI 75***	90L 4
29	49	346	1.7	**UMI 110**	90L 4
29	49	336	1,1	**UMI 90**	90L 4
25	56	395	1.2	**UMI 110**	90L 4

HINWEIS.
Die Leistungsangaben beziehen sich auf die mecanische Belasbarkeit der Getriebe.
Bei den mit (*) gekennzeichneten Getrieben ist außerdem die thermische Leistungsgrenze zu beachten (s. Kap. 1.7-A).

1.7 Prestazioni motoriduttori

1.7 Gearmotors performances

1.7 Leistungen der Getriebemotoren

1.5 kW

n_1= 2830 min^{-1} — 80C 2
n_1= 2830 min^{-1} — 90S 2
n_1= 1400 min^{-1} — 90L 4
n_1= 925 min^{-1} — 90LB 6
n_1= 940 min^{-1} — 100A 6

n_2 min^{-1}	ir	T2 Nm	FS'		
25	56	390	0,9	**UMI 90**	90L 4
24	40	408	1,1	**UMI 90**	100A 6
23	40	415	1,1	**UMI 90**	90LB 6
20	70	458	1.1	**UMI 110**	90L 4
19	49	478	0,9	**UMI 90**	100A 6
19	49	486	0,9	**UMI 90**	90LB 6
18	80	508	1.0	**UMI 110**	90L 4
17	56	546	1.0	**UMI 110**	100A 6
17	56	555	1.0	**UMI 110**	90LB 6
13	70	640	0.9	**UMI 110**	100A 6
13	70	650	0.8	**UMI 110**	90LB 6

1.8 kW

n_1= 2770 min^{-1} — 80D 2
n_1= 1400 min^{-1} — 90LB 4
n_1= 940 min^{-1} — 100B 6

n_2 min^{-1}	ir	T2 Nm	FS'		
560	5	27	2.9	**UMI 63**	80D 2
560	5	26.7	1.7	**UMI 50***	80D 2
396	7	37	6,2	**UMI 90**	80D 2
396	7	37	3.8	**UMI 75**	80D 2
396	7	37	2.2	**UMI 63**	80D 2
396	7	37	1.4	**UMI 50***	80D 2
286	5	51.7	2.1	**UMI 63**	90LB 4
277	10	53	4,8	**UMI 90**	80D 2
277	10	52	3.0	**UMI 75**	80D 2
277	10	52	1.8	**UMI 63**	80D 2
277	10	52	1.1	**UMI 50***	80D 2
200	7	74	4,3	**UMI 90**	90LB 4
200	7	73	2.8	**UMI 75**	90LB 4
200	7	72	1.6	**UMI 63**	90LB 4
185	15	77	3,6	**UMI 90**	80D 2
185	15	76	2.2	**UMI 75**	80D 2
185	15	76	1.3	**UMI 63***	80D 2
140	10	104	3,3	**UMI 90**	90LB 4
140	10	103	2.1	**UMI 75**	90LB 4
140	10	102	1.2	**UMI 63**	90LB 4
93	15	151	2,5	**UMI 90**	90LB 4
93	15	148	1.5	**UMI 75**	90LB 4
93	15	147	0.9	**UMI 63***	90LB 4
70	20	196	1,9	**UMI 90**	90LB 4
70	20	194	1,1	**UMI 75**	90LB 4
63	15	219	2.9	**UMI 110**	100B 6
63	15	219	2	**UMI 90**	100B 6
57	49	216	1,3	**UMI 90**	80D 2
57	49	216	0,8	**UMI 75***	80D 2
50	28	254	1,6	**UMI 90**	90LB 4
50	28	254	1,0	**UMI 75***	90LB 4
49	56	247	1,1	**UMI 90***	80D 2
47	20	289	2.5	**UMI 110**	100B 6
47	20	289	1.6	**UMI 90**	100B 6
40	70	291	0,8	**UMI 90***	80D 2
35	40	354	1.8	**UMI 110**	90LB 4
35	40	349	1,2	**UMI 90**	90LB 4
29	49	415	1.4	**UMI 110**	90LB 4
29	49	403	0,9	**UMI 90***	90LB 4
25	56	474	1.0	**UMI 110**	90LB 4
20	70	550	0.9	**UMI 110**	90LB 4
18	80	609	0.8	**UMI 110**	90LB 4

2.2 kW

n_1= 2840 min^{-1} — 90L 2
n_1= 1410 min^{-1} — 100A 4
n_1= 950 min^{-1} — 112A 6

n_2 min^{-1}	ir	T2 Nm	FS'		
570	5	32.4	3.4	**UMI 63**	90L 2
406	7	45	5,2	**UMI 90**	90L 2
406	7	45	3.2	**UMI 75**	90L 2
406	7	45	1.9	**UMI 63***	90L 2
284	10	63	4,1	**UMI 90**	90L 2
284	10	63	2.5	**UMI 75**	90L 2
284	10	62	1.5	**UMI 63***	90L 2
189	15	92	3,0	**UMI 90**	90L 2
189	15	91	1.8	**UMI 75**	90L 2
189	15	91	1.1	**UMI 63***	90L 2
141	10	127	2,7	**UMI 90**	100A 4
141	10	125	1,8	**UMI 75**	100A4
101	28	159	1,2	**UMI 75***	90L2
396	7	37	6,2	**UMI 90**	80D 2
396	7	37	3,8	**UMI 75**	80D 2
277	10	53	4,8	**UMI 90**	80D 2
277	10	53	3,0	**UMI 75**	80D 2
200	7	74	4,3	**UMI 90**	90LB 4
200	7	73	2,8	**UMI 75**	90LB 4
141	10	127	2,7	**UMI 90**	100A 4
101	28	157	2,0	**UMI 90**	90L 2
101	28	159	1,2	**UMI 75***	90L 2
94	15	183	2.9	**UMI 110**	100A 4
94	15	183	2,0	**UMI 90**	100A 4
94	15	181	1,3	**UMI 75**	100A 4
71	20	241	2.6	**UMI 90**	100A 4
71	20	238	1,6	**UMI 90**	100A 4
71	20	235	0,9	**UMI 75***	100A 4
63	15	268	1,6	**UMI 90**	100BL 6
63	15	265	1,0	**UMI 75***	100BL 6
58	49	261	1.7	**UMI 110**	90L 2
50	28	313	1.8	**UMI 110**	100A 4
50	28	309	1,3	**UMI 90**	100A 4
50	28	309	0,8	**UMI 75***	100A 4
35	40	429	1.5	**UMI 110**	100A 4
35	40	423	1,0	**UMI 90**	100A 4
35	40	417	0,6	**UMI 75**	100A 4
29	49	504	1.2	**UMI 110**	100A 4
29	49	489	0,8	**UMI 90**	100A 4
25	56	576	0.8	**UMI 110**	100A 4

3 kW

n_1= 2840 min^{-1} — 90LB 2
n_1= 2860 min^{-1} — 100A 2
n_1= 1420 min^{-1} — 100B 4
n_1= 940 min^{-1} — 112B 6
n_1= 950 min^{-1} — 132S 6

n_2 min^{-1}	ir	T2 Nm	FS'		
576	5	43.8	1.8	**UMI 63***	90LB 2
409	7	60	3,8	**UMI 90**	100A 2
406	7	61	2.3	**UMI 75***	90LB 2
406	7	61	1.4	**UMI 63***	90LB 2
284	10	86	3,0	**UMI 90**	90LB 2
284	10	86	1.8	**UMI 75***	90LB 2
284	10	85	1.1	**UMI 63***	90LB 2
203	7	121	2,6	**UMI 90**	100B 4
203	7	120	1.7	**UMI 75***	100B 4
191	15	125	3.2	**UMI 110**	100A 2
189	15	126	2,2	**UMI 90**	90LB 2
189	15	124	1.3	**UMI 75***	90LB 2
189	15	124	0.8	**UMI 63***	90LB 2
142	10	171	3.1	**UMI 110**	100B 4
142	10	171	2,0	**UMI 90**	100B 4
142	10	169	1,3	**UMI 75***	100B 4
134	7	181	2,1	**UMI 90**	112B 6
134	7	179	1,3	**UMI 75***	112B 6
102	28	213	1,5	**UMI 90***	100A 2
102	28	216	0,9	**UMI 75***	100A 2
101	28	215	1,5	**UMI 90***	90LB 2
101	28	217	0,9	**UMI 75***	90LB 2
95	15	248	2.2	**UMI 110**	100B 4
95	15	248	1,5	**UMI 90**	100B 4
95	15	245	0,9	**UMI 75***	100B 4
94	10	256	1,6	**UMI 90**	112B 6
94	10	253	1,0	**UMI 75***	112B 6
72	40	293	1,1	**UMI 90***	100A 2
71	20	327	1.9	**UMI 110**	100B 4
71	40	295	1,1	**UMI 90***	90LB 2
71	20	323	1,2	**UMI 90**	100B 4
63	15	632	1.7	**UMI 110**	132S 6
63	15	366	1,2	**UMI 90***	112B 6
58	49	349	0,8	**UMI 90***	100A 2
58	49	351	0,8	**UMI 90***	90LB 2
51	28	424	1.3	**UMI 110**	100B 4
47	20	482	1.5	**UMI 110**	112B 6
36	40	581	1.1	**UMI 110**	100B 4
29	49	682	0.9	**UMI 110**	100B 4

1.7 Prestazioni motoriduttori

1.7 Gearmotors performances

1.7 Leistungen der Getriebemotoren

4 kW

n_1= 2860 min^{-1} 100B 2
n_1= 2860 min^{-1} 112A 2
n_1= 1410 min^{-1} 100BL 4
n_1= 1425 min^{-1} 112A 4
n_1= 950 min^{-1} 132M 6

n_2 min^{-1}	ir	T2 Nm	FS'		
409	7	80	4.2	**UMI 110**	112A 2
409	7	80	4.2	**UMI 110**	100A 2
409	7	80	2,9	**UMI 90**	100B 2
409	7	80	2,9	**UMI 90**	112A 2
409	7	80	1,8	**UMI 75***	100B 2
409	7	80	1,8	**UMI 75***	112A 2
286	10	114	3.4	**UMI 110**	112A 2
286	10	114	3.4	**UMI 110**	100B 2
286	10	114	2,2	**UMI 90***	100B 2
286	10	114	2,2	**UMI 90***	112A 2
286	10	114	1,4	**UMI 75***	100B 2
286	10	114	1,4	**UMI 75***	112A 2
204	7	161	3.0	**UMI 110**	112A 4
204	7	161	2,0	**UMI 90**	112A 4
204	7	160	1,3	**UMI 75***	112A 4
201	7	163	2,0	**UMI 90**	100BL 4
201	7	161	1,3	**UMI 75***	100BL 4
191	15	166	2.4	**UMI 110**	112A 2
191	15	166	2.4	**UMI 110**	100B 2
191	15	166	1,7	**UMI 90***	100B 2
191	15	166	1,7	**UMI 90***	112A 2
191	15	164	1,0	**UMI 75***	100B 2
191	15	164	1,0	**UMI 75***	112A 2
143	10	228	2.4	**UMI 110**	112A 4
143	20	219	1,3	**UMI 90***	100B 2
143	20	219	1,3	**UMI 90***	112A 2
143	10	228	1,5	**UMI 90***	112A 4
143	10	225	1,0	**UMI 75***	112A 4
141	10	230	1,5	**UMI 90***	100BL 4
141	10	228	1,0	**UMI 75***	100BL 4
136	7	239	2.4	**UMI 110**	132M 6
102	28	284	1,1	**UMI 90***	100B 2
102	28	284	1,1	**UMI 90***	112A 2
95	15	330	1.6	**UMI 110**	112A 4
95	15	330	1,1	**UMI 90***	112A 4
94	15	333	1,1	**UMI 90***	100BL 4
72	40	390	0,8	**UMI 90***	100B 2
72	40	390	0,8	**UMI 90***	112A 2
71	20	434	1.4	**UMI 110**	112A 4
71	20	429	0,9	**UMI 90***	112A 4
71	20	433	0,9	**UMI 90***	100BL 4
63	15	483	1.3	**UMI 110**	132M 6
51	28	563	1.0	**UMI 110***	112A 4
36	40	772	0.8	**UMI 110***	112A 4

5.5 kW

n_1= 2880 min^{-1} 112B 2
n_1= 2870 min^{-1} 132S 2
n_1= 1440 min^{-1} 132S 4
n_1= 1400 min^{-1} 112BL 4
n_1= 950 min^{-1} 132ML6

n_2 min^{-1}	ir	T2 Nm	FS'		
411	7	110	3.1	**UMI 110**	112B 2
410	7	110	3.1	**UMI 110**	132S 2
411	7	110	2,1	**UMI 90***	112B 2
411	7	110	1,3	**UMI 75***	112B 2
288	10	156	2.5	**UMI 110**	112B 2
287	10	156	2.5	**UMI 110**	132S 2
288	10	155	1,6	**UMI 90***	112B 2
288	10	155	1,0	**UMI 75***	112B 2
200	7	226	1,4	**UMI 90***	112BL 4
200	7	223	0,9	**UMI 75***	112BL 4
192	15	227	1.7	**UMI 110***	112B 2
192	15	227	1,2	**UMI 90***	112B 2
191	15	228	1.7	**UMI 110***	132S 2
144	10	310	1.7	**UMI 110**	132S 4
144	20	299	1,0	**UMI 90***	112B 2
140	10	319	1,1	**UMI 90***	112BL 4
136	7	329	1.8	**UMI 110**	132ML 6
103	28	388	0,8	**UMI 90***	112B 2
96	15	449	1.2	**UMI 110***	132S 4
93	15	461	1.15	**UMI 110***	112BL 4
93	15	461	0,8	**UMI 90***	112BL 4
63	15	663	1.0	**UMI 110***	132ML 6

7.5 kW

n_1= 2890 min^{-1} 132SL 2
n_1= 2860 min^{-1} 112BL 2
n_1= 1440 min^{-1} 132M 4

n_2 min^{-1}	ir	T2 Nm	FS'		
413	7	149	2.3	**UMI 110***	132SL 2
409	7	151	2.3	**UMI 110***	112BL 2
409	7	151	1,5	**UMI 90***	112BL 2
409	7	151	0,9	**UMI 75***	112BL 2
289	10	211	1.9	**UMI 110***	132SL 2
286	10	213	1.8	**UMI 110***	112BL 2
286	10	213	1,2	**UMI 90***	112BL 2
206	7	299	1.6	**UMI 110***	132M 4
193	15	309	1.3	**UMI 110***	132SL 2
191	15	312	1.3	**UMI 110***	112BL 2
191	15	312	0,9	**UMI 90***	112BL 2
96	15	612	0.9	**UMI 110***	132M 4

9.2 kW

n_1= 1450 min^{-1} 132ML 4

n_2 min^{-1}	ir	T2 Nm	FS'		
207	7	365	1.3	**UMI 110***	132ML 4
145	10	515	1.0	**UMI 110***	132ML 4

11 kW

n_1= 2940 min^{-1} 132M 2
n_1= 1455 min^{-1} 160M 4
n_1= 965 min^{-1} 160L 6

n_2 min^{-1}	ir	T2 Nm	FS'		
420	7	215	1.6	**UMI 110***	132M 2
294	10	304	1.3	**UMI 110***	132M 2

N.B.
Tutte le potenze indicate si riferiscono alla potenza meccanica dei riduttori.
Per i riduttori contrassegnati con **(*)** è opportuno effettuare la verifica della potenza limite termico secondo le indicazioni riportate nel par. 1.7-A

NOTE.
The indicated power is based on the mechanical capacities of the gearboxes.
For the gearboxes marked with (*) it is aslo necessary to obey the therminal capacity like shown on chapter 1.7-A.

HINWEIS.
Die Leistungsangaben beziehen sich auf die mecanische Belasbarkeit der Getriebe.
Bei den mit (*) gekennzeichneten Getrieben ist außerdem die thermische Leistungsgrenze zu beachten (s. Kap. 1.7-A).

1.8 Dimensioni *1.8 Dimensions* 1.8 Abmessungen

-

U

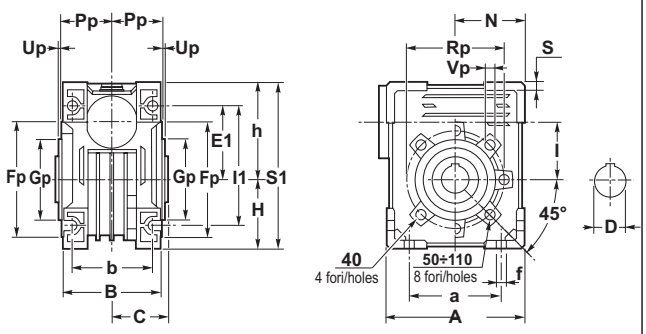

-

UI

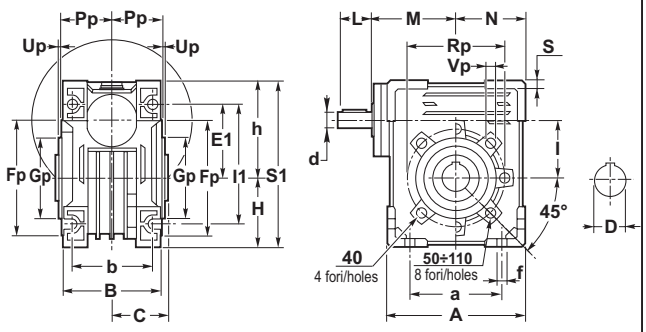

UMI

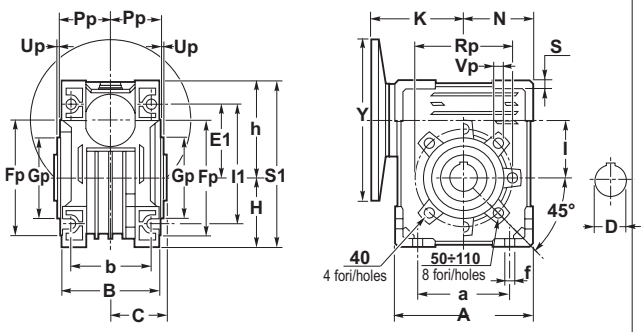

FA
FB

UI

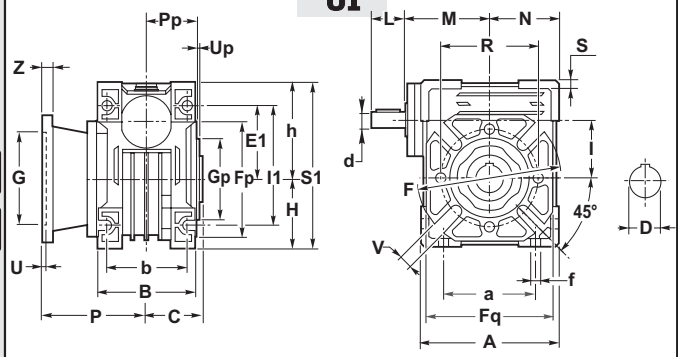

UMI

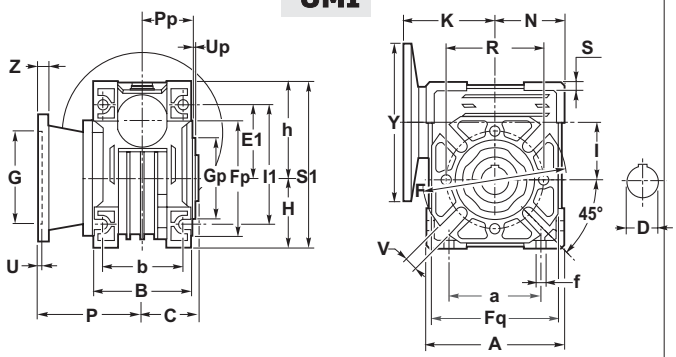

1.8 Dimensioni

1.8 Dimensions

1.8 Abmessungen

	A	a	B	b	C	D H7	d j6	E1	f	h	H	l	l1	L	M	m	N	S	S1
40	100	70	71	60	39	18	11	55	6.5	71.5	50	40	90	22	64	M5	50	6	121.5
50	120	80	85	70	46	25	14	64	8.5	84	60	50	104	30	74	M6	60	7	144
63	144	100	103	85	56	25	18	80	8.5	102	72	63	130	45	96	M6	72	8	174
75	172	120	112	90	60	28 (30)	24	93	11.5	119	86	75	153	50	105	M8	86	10	205
90	206	140	130	100	70	35	24	102	13	135	103	90	172	50	125	M8	103	11	238
110	255	170	144	115	77.5	42	28	125	14	167.5	127.5	110	207 $^{0}_{+3}$	60	142	M8	127.5	14.5	295

	Fp	Gp (e8)	Pp	Rp	Up	Vp
40	87	60	36.5	75	2.5	M6
50	100	70	43.5	85	2.5	M8
63	110	80	53	95	3	M8
75	140	95	57	115	3	M8
90	160	110	67	130	3	M10
110	200	130	74	165	3.5	M10

		F	Fq	G (F8)	P	R	U	V	Z
40	FA	110	95	60	67	75	4	9	7
	FB		95		97				
50	FA	125	110	70	90	85	5	11	9
	FB		110		120				
63	FA	180	142	115	82	150	6	11	10
	FB		142		112				
75	FA	200	170	130	111	165	6	14	13
	FB	160	160	110	90	130	5	11	12
90	FA	210	200	152	111	175	6	14	13
	FB	250	210	180	122	215	6	14	16
110	FA	280	260	170	131	230	6	14	16

UMI - Versione Entrata / *Input version* / Antriebausführung							
UMI		**40**	**50**	**63**	**75**	**90**	**110**
IEC	**Y**	**K**	**K**	**K**	**K**	**K**	**K**
56 B5	120	70.5	-	-	-	-	-
56 B14	80	-	-	-	-	-	-
63 B5	140	70.5	80.5	-	-	-	-
63B14	90	70.5•	80.5•	-	-	-	-
71 B5	160	70.5	80.5	95	-	-	-
71B14	105	70.5	80.5•	95•	-	-	-
80 B5	200	-	80.5	95	118	128	-
80 B14	120	-	80.5	95	118•	128	-
90 B5	200	-	-	95	118	128	152
90 B14	140	-	-	95	120	128	-
100-112 B5	250	-	-	-	120	130	152
100-112 B14	160	-	-	-	120	130	153
132 B5	300	-	-	-	-	-	152.5

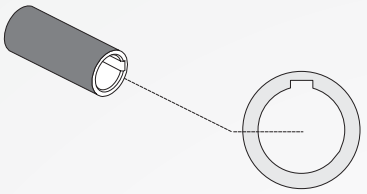

C21

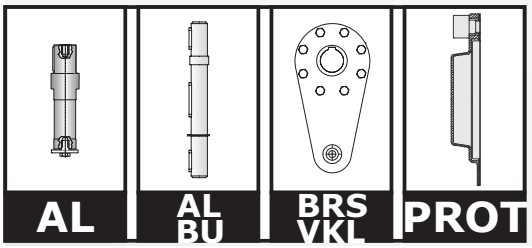

C22

1.8.1 - ALBERI LENTI

1.8.1 - OUTPUT SHAFT

1.8.1 - ABTRIEBSWELLEN

UI
UMI

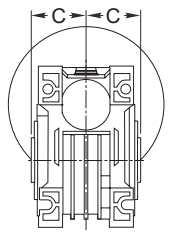

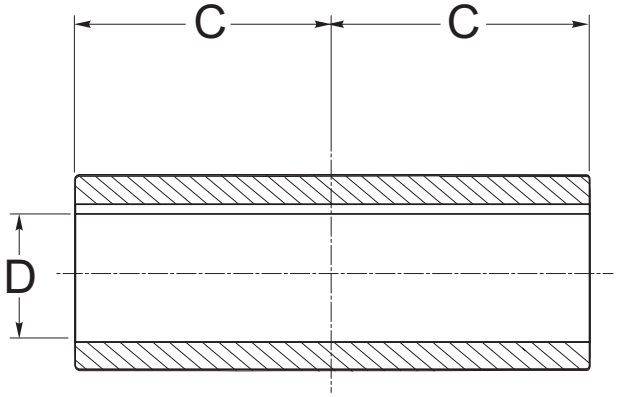

	40	50	63	75	90	110
D	18	25	25	28	35	42
tollerance D	H7	H7	H7	H7	H7	H7
C	39	46	56	60	70	77,5

C

Perno macchina / *Customer shaft* / Maschinachse

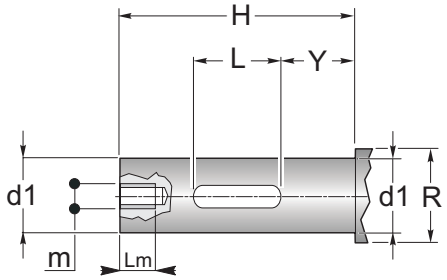

	40	50	63	75	90	110
d1	18	25	25	28	35	42
tollerance d1	g6	g6	g6	g6	g6	g6
H	76	89	109	117	137	153
L	40	50	60	60	70	80
m	M8	M8	M8	M8	M10	M10
Lm	16	16	16	16	25	25
R	22	28	34	34	38	50
Y	21	24	30	30	37	37

1.9 OPT - ACC. - Accessori - Opzioni

1.9 OPT - ACC. - Accessories - Options

1.9 OPT - ACC. Zubehör - Optionen

AL

AL - ALBERO LENTO SPORGENTE
AL - SINGLE OUTPUT SHAFTS
AL - EINSEITIGE ABTRIEBSWELLEN

Tutti i riduttori a vite senza fine sono forniti con albero lento cavo.
A richiesta, possono essere forniti alberi lenti come indicato nei disegni dimensionali.
Le dimensioni delle linguette sono conformi alle norme UNI 6604-69.

All worm gearboxes are supplied with hollow output shaft. Output shafts as shown in the size drawings can be supplied upon request.

Sizes of feathers comply with standards UNI 6604-69.

AL BU

AL_BU - ALBERO LENTO BISPORGENTE
AL_BU - DOUBLE OUTPUT SHAFTS
AL_BU - BEIDSEITIGE ABTRIEBSWELLEN

Alle Schneckengetriebe werden mit hohler Abtriebswelle geliefert. Auf Anfrage können Abtriebswellen gemäß den Maßzeichnungen geliefert werden.

Die Abmessungen der Federn entsprechen den Normen UNI 6604-69.

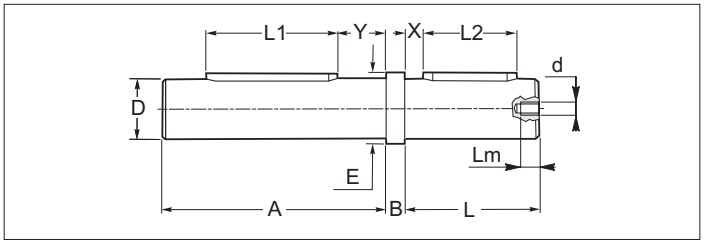

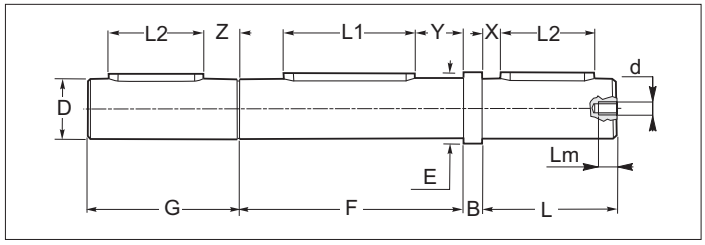

UI UMI

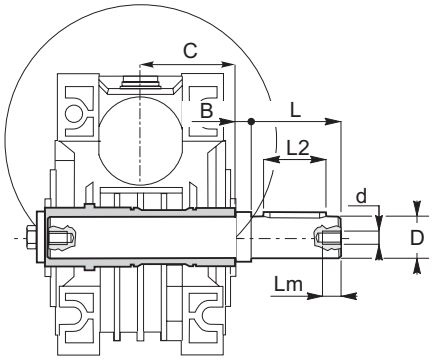

UI UMI

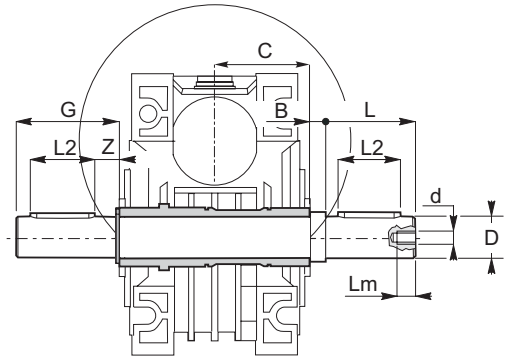

	UI - UMI					
	40	**50**	**63**	**75**	**90**	**110**
A	76	89	109	117	137	153
B	10	10	10	10	10	10
C	39	46	56	60	70	77,5
D	18	25	25	28	35	42
tollerance D	g6	g6	g6	g6	g6	g6
d	M8	M8	M8	M8	M10	M10
E	22	28	34	34	38	50
F	78	92	112	120	140	155
G	50	55	70	70	90	110
L	40	45	60	60	80	100
L1	40	50	60	60	70	80
L2	25	30	40	40	50	80
Lm	16	16	16	16	25	25
X	8	7.5	10	10	15	10
Y	21	24	30	30	37	37
Z	18	18	20	20	25	20

ATTENZIONE
L'albero lento sporgente è fornito per essere installato sulla versione del riduttore con albero **CAVO** con diametro **STANDARD**.

ATTENTION
The output shaft is available only for standard hollow shaft diameter.

Achtung:
Die Einseitige Abtriebswelle wird fuer die Montage bei Getrieben mit Standart Hohlwelle geliefert.

N.B.
Tutti gli alberi lenti vengono forniti in kit di montaggio completi di linguette,. rondelle, viti (e anelli elastici seeger per l'albero bisporgente)

NOTE
All output shafts are supplied in kit complete with feathers, washers and screws (as well as snap rings for the double extended shaft).

HINWEIS
Alle Abtriebswellen werden als Bausätze komplett mit Federn, Scheiben und Schrauben geliefert (bei der beidseitigen Abtriebswelle auch die Seegerringe).

1.9 OPT - ACC. - Accessori - Opzioni

1.9 OPT - ACC. - Accessories - Options

1.9 OPT - ACC. Zubehör - Optionen

BRS VKL

BRS_VKL - Braccio Reazione Semplice_con boccola_VKL
BRS_VKL - Torque arm - Single_with VKL_bushing
BRS_VKL - Drehmomentstütze - Normal_mit VKL - Buchse

Per il fissaggio del riduttore mediante tirante, viene fornito in allegato l'apposito braccio di reazione.

If the gearbox shall be shaft mounted as an extra part there is also available a torque arm.

Soll das Getriebe pendelnd gelagert werden, so ist als Zubehörteil auch eine Drehmomentstütze.

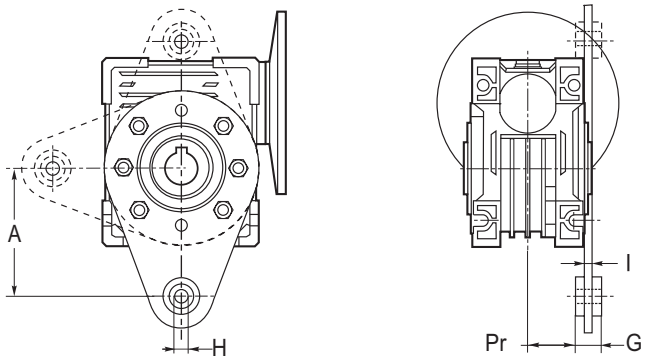

UI - UMI	40	50	63	75	90	110
A	100	100	150	200	200	250
G	15	15	20	25	25	25
H	10	10	10	20	20	20
I	4	4	6	6	6	6
Pr	31	38	46	47.5	57.5	64.5

C

PROT

PROT. - Coperchio di protezione

PROT. - Protection cover

PROT - Schultzvorrichtungdeckel

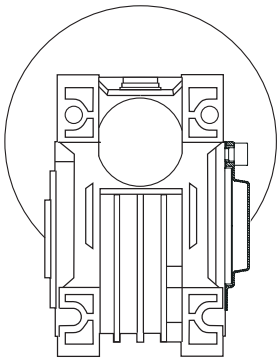

ELSX

ELSX - Vite senza fine - Elica Sinistra

ELSX - Worm Geraboxe - Left helix

ELSX - Linksgängige Schraubenlinie der Schneke

Standard

1.10 Linguette

1.10 Keys

1.10 Paßfedern

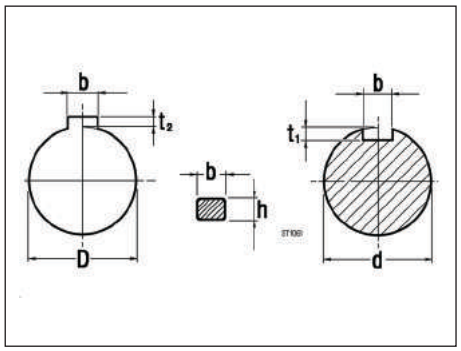

Albero entrata
Input shaft
Antriebswelle

d	b x h	t_1	
9	3 x 3	1.8	
11	4 x 4	2.5	
14	5 x 5	3.0	$^{+0.1}_{0}$
18	6 x 6	3.5	
19	6 x 6	3.5	
24	8 x 7	4.0	
28	8 x 7	4.0	
30	8 x 7	4.0	
35	10 x 8	5.0	
38	10 x 8	5.0	$^{+0.2}_{0}$
42	12 x 8	5.0	
48	14 x 9	5.5	
55	16 x 10	6.0	
65	18 x 11	7.0	

Albero uscita
Output shaft
Abtriebswelle

D	b x h	t_2	
11	4 x 4	1.8	
14	5 x 5	2.3	
18	6 x 6	2.8	$^{+0.1}_{0}$
19	6 x 6	2.8	
24	8 x 7	3.3	
25	8 x 7	3.3	
28	8 x 7	3.3	
30	8 x 7	3.3	
32	10 x 8	3.3	
35	10 x 8	3.3	
40	10 x 8	3.3	
42	12 x 8	3.3	
48	14 x 9	3.8	
50	14 x 9	3.8	$^{+0.2}_{0}$
55	16 x 10	4.3	
60	18 x 11	4.3	
65	18 x 11	4.4	
70	20 x 12	4.9	
80	22 x 14	5.4	
90	25 x 14	5.4	
100	28 x 16	6.4	
110	28 x 16	6.4	

1.0 RIDUTTORI A VITE SENZA FINE IMPORT W
1.0 WORM GEARBOXES IMPORT W
1.0 SCHNECKENGETRIEBE IMPORT W

W

1.1	Caratteristiche tecniche	*Technical characteristics*	Technische Eigenschaften	D1
1.2	Designazione	*Designation*	Bezeichnungen	D2
1.2	Versioni	*Versions*	Ausführungen	D3
1.4	Lubrificazione	*Lubrication*	Schmierung	D6
1.5	Carichi radiali e assiali	*Axial and overhung loads*	Radiale und Axiale Belastungen	D7
1.6	Prestazioni riduttori	*Gearboxes performances*	Leistungen der Getriebe	D10
1.8	Dimensioni	*Dimensions*	Abmessungen	D13
1.9	Accessori	*Accessories*	Zubehör	D17

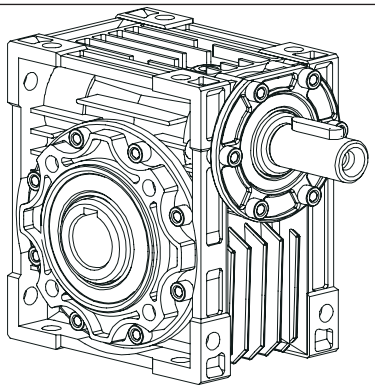

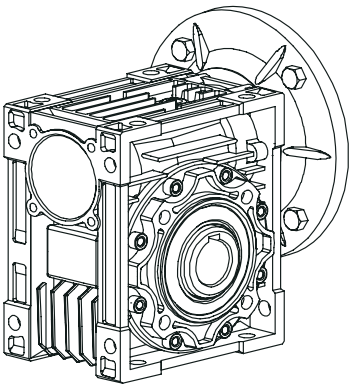

1.1 Caratteristiche tecniche

Dopo 5 anni dalla prima presentazione, a partire da questo mese, è disponibile la nuova gamma di riduttori a vite senza fine serie W.
La nuova gamma comprende le taglie 25, 30, 130 e 150.
Sono intercambiabili alla serie precedente, senza giunto in entrata, in alluminio le taglie 25-90 mentre le taglie 110-150 in ghisa e tutte verniciate di blu.

1.1 Technical characteristics

After 5 years from the first presentation, it's now available the new W worm gearboxes range.
We introduce also the new sizes 25, 30, 130 and 150.
The performances and the dimensions are the same to the old series but without input coupling and all sizes painted.

1.1 Technische Eigenschaften

5 Jahre nach der ersten Auflage können wir Ihnen eine neue Auswahl an Schneckengetrieben der W-Serie anbieten, die jetzt auch in den Größen 25, 30, 130 und 150 verfügbar sind.
Sie sind austauschbar mit den Vorgängermodellen, ohne Kupplung, verfügbar in den Größen 25 - 90 aus Aluminum und in den Größen 110 -150 aus Gusseisen und alle blau lackiert.

D

1.2 Designazione — *1.2 Designation* — 1.2 Bezeichnung

WEB: Reference Designation

Maschine	Typ Connection	Size	Output Version	Mounting Version	Output Flange	Reduction ratio	IEC type and Input Shaft	Input Version	Input Shaft	Designazione Motori *Designation Motors* Bezeichnung Motoren	Type Shaft Diameter	Shaft Diameter	Mounting Position Output Flange	Mounting positions	Position Terminal Box
00 M	01 Tycon	02 SIZE	03 OV	03a MV	03b OF	04 IR	05 IECT	06 IV	07 IS		14 TYPSD	15 SD	16 MPOF	17 MP	19 PMT

CODE: Example of order: "WMI 40 FA 1/7.5 71B5"

W	MI	25 30 40 50 63 75 90 110 130 150	— FA FB FC	—	—	Vedi tabelle prestazioni *See performance tables* *Siehe Leistungs-tabellen*	—	—	80B5 ... 80B14	—	—	—	—	M1 M2 M3 M4 M5 M6	1 2 3 4
									—	Look *CT 18*			SIN		
	I								—						

00 M - Macchina — *M - Maschine* — M - Getriebe

W

01 TYPCON - Tipo connessione — *TYPCON - Type Connection* — TYPCON - Typ Verbindung

WI	WMI
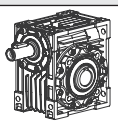	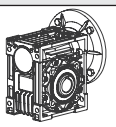

02 SIZE - Grandezza — *SIZE - Size* — SIZE - Größe

WI - WMI	25	30	40	50	63	75	90	110	130	150
	WI not available	—								

03 03a 03b — WI WMI

OV - Versione Uscita	*OV - Output Version*	OV - Abtriebausführung
MV - Versione Montaggio	*MV - Mounting Version*	MV - Bauversion
OF - Flangia Uscita	*OF - Output Flange*	OF - Flansche am Abtrieb

-

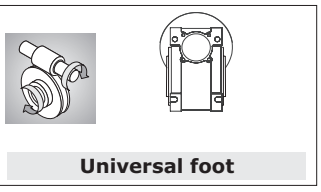

Universal foot

FA FB FC

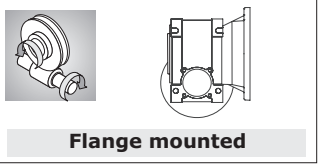

Flange mounted

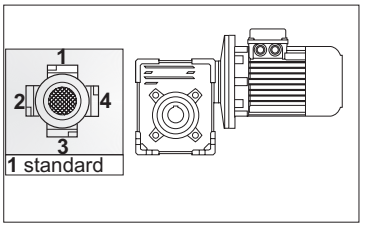

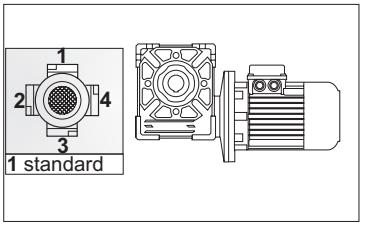

- FA FB FC — Elenco versioni / Versions / Ausführungen

Il senso dell'elica è destro
The helix is right-hande
Die Schnecke ist rechtsgängig

Posizioni della Morsettiera
Position Terminal Box
Montagposition
Klemmenkasten

1.2 Designazione

04 IR- Rapporto di riduzione

(Vedi prestazioni). Tutti i valori dei rapporti sono approssimati. Per applicazioni dove necessita il valore esatto consultare il ns. servizio tecnico.

1.2 Designation

IR - Reduction ratio

(See ratings). Ratios are approximate values. If you need exact values for a specific application, please contact our Engineering.

1.2 Bezeichnung

IR - Übersetzungsverhältnis

(Siehe "Leistungen"). Bei allen Werten der Übersetzungen handelt es sich um approximative Wertangaben. Bei Applikationen, bei denen die exakte Wertangabe erforderlich ist, muss unser Technischer Kundendienst konsultiert werden.

05 06 07	WMI	IECT - Tipo IEC e Albero Entrata	*IECT - IEC type and Input Shaft*	OV - IEC Typ und Antriebswelle
		IV - Versione Entrata	*IV - Input Version*	IV - Antriebausführung
		IS - Albero Entrata	*IS - Input shaft*	IS - Antriebswelle

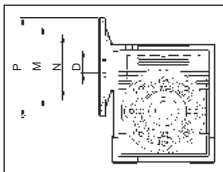	IEC	N	M	P	ir										
					7.5	10	15	20	25	30	40	50	60	80	100
					D										
WMI 25	**56 B14**	50	65	80	ø 9	ø 9	ø 9	ø 9	-	ø 9	ø 9	ø 9	ø 9	-	-
WMI 30	**63 B5**	95	115	140	ø 11	ø 11	ø 11	ø 11	ø 11	ø 11	ø 11	ø 11	-	-	-
	63 B14	60	75	90											
	56 B5	80	100	120	ø 9	ø 9	ø 9	ø 9	ø 9	ø 9	ø 9	ø 9	ø 9	ø 9	-
	56 B14	50	65	80											
WMI 40	**71 B5**	110	130	160	ø 14	ø 14	ø 14	ø 14	ø 14	ø 14	ø 14	-	-	-	-
	71 B14	70	85	105											
	63 B5	95	115	140	ø 11	ø 11	ø 11	ø 11	ø 11	ø 11	ø 11	ø 11	ø 11	ø 11	ø 11
	63 B14	60	75	90											
	56 B5	80	100	120	-	-	-	-	-	-	-	ø 9	ø 9	ø 9	ø 9
WMI 50	**80 B5**	130	165	200	ø 19	ø 19	ø 19	ø 19	ø 19	ø 19	-	-	-	-	-
	80 B14	80	100	120											
	71 B5	110	130	160	ø 14	ø 14	ø 14	ø 14	ø 14	ø 14	ø 14	ø 14	ø 14	ø 14	-
	71 B14	70	85	105											
	63 B5	95	115	140	-	-	-	-	-	-	ø 11	ø 11	ø 11	ø 11	ø 11
WMI 63	**90 B5**	130	165	200	ø 24	ø 24	ø 24	ø 24	ø 24	ø 24	-	-	-	-	-
	90 B14	95	115	140											
	80 B5	130	165	200	ø 19	ø 19	ø 19	ø 19	ø 19	ø 19	ø 19	ø 19	ø 19	-	-
	80 B14	80	100	120											
	71 B5	110	130	160	-	-	-	-	-	-	ø 14	ø 14	ø 14	ø 14	ø 14
	71 B14	70	85	105											
WMI 75	**100/112 B5**	180	215	250	ø 28	ø 28	ø 28	-	-	-	-	-	-	-	-
	100/112 B14	110	130	160											
	90 B5	130	165	200	ø 24	ø 24	ø 24	ø 24	ø 24	ø 24	ø 24	-	-	-	-
	90 B14	95	115	140											
	80 B5	130	165	200	-	-	-	ø 19	ø 19	ø 19	ø 19	ø 19	ø 19	ø 19	ø 19
	80 B14	80	100	120											
	71 B5	110	130	160	-	-	-	-	-	-	-	ø 14	ø 14	ø 14	ø 14
WMI 90	**100/112 B5**	180	215	250	ø 28	ø 28	ø 28	ø 28	ø 28	ø 28	-	-	-	-	-
	100/112 B14	110	130	160											
	90 B5	130	165	200	ø 24	ø 24	ø 24	ø 24	ø 24	ø 24	ø 24	ø 24	ø 24	-	-
	90 B14	95	115	140											
	80 B5	130	165	200	-	-	-	-	-	-	ø 19	ø 19	ø 19	ø 19	ø 19
	80 B14	80	100	120											
WMI 110	**132 B5**	230	265	300	ø 38	ø 38	ø 38	ø 38	-	-	-	-	-	-	-
	100/112 B5	180	215	250	ø 28	ø 28	ø 28	ø 28	ø 28	ø 28	ø 28	ø 28	ø 28	-	-
	90 B5	130	165	200	-	-	-	-	ø 24	ø 24	ø 24	ø 24	ø 24	ø 24	ø 24
	80 B5	130	165	200	-	-	-	-	-	-	-	-	-	ø 19	ø 19
WMI 130	**132 B5**	230	265	300	ø 38	ø 38	ø 38	ø 38	ø 38	ø 38	ø 38	-	-	-	-
	100/112 B5	180	215	250	-	-	-	-	ø 28	ø 28	ø 28	ø 28	ø 28	ø 28	ø 28
	90 B5	130	165	200	-	-	-	-	-	-	-	-	-	ø 24	ø 24
WMI 150	**160 B5**	250	300	350	ø 42	ø 42	ø 42	ø 42	-	-	-	-	-	-	-
	132 B5	230	265	300	-	-	-	ø 38	ø 38	ø 38	ø 38	ø 38	-	-	-
	100/112 B5	180	215	250	-	-	-	-	-	-	-	ø 28	ø 28	ø 28	ø 28

D

1.2 Designazione

1.2 Designation

1.2 Bezeichnung

IECT	—	Accoppiamento diretto / *Direct coupling* / Direkte Passung
IV	—	Predisposto per accoppiamento con Unità Motrice IEC / *pre arrangement motor IEC* / geeignet für die Kombination mit Antriebseinheit IEC
IS	**...**	Grandezza IEC / *Size IEC* /

Posizione morsettiera - Vedere - 19 - PMT - Pagina D5
Terminal board position - Look - 19 - PMT - Page D5
Lage des Klemmenkastens - Siehe - 19 - PMT - Auf Seite D5

Designazione motore elettrico Se è richiesto un motoriduttore completo di motore è necessario riportare la designazione di quest'ultimo. A tale proposito consultare il ns. catalogo dei motori elettrici Electronic Line.	*Electric motor designation* *For applications requiring a gearmotor, motor designation must be specified.To this end, please refer to our Electronic Line electric motor catalogue.*	Bezeichnung des Elektromotors Wird ein Getriebemotor komplett mit Elektromotor angefordert, müssen dessen Daten angegeben werden. Diesbezüglich verweisen wir auf unseren Katalog der Elektromotoren "Electronic Line".

05 **06** **07**	**WI**	**IECT - Tipo IEC e Albero Entrata**	***IECT - IEC type and Input Shaft***	**OV - IEC Typ und Antriebswelle**
		IV - Versione Entrata	***IV - Input Version***	**IV - Antriebausführung**
		IS - Albero Entrata	***IS - Input shaft***	**IS - Antriebswelle**

— Nessuna indicazione = diametro standard;

— No indications = standard diameter;

— Keine Angabe = Standard-durchmesser

WI	**30**	**40**	**50**	**63**	**75**	**90**	**110**	**130**	**150**
	(∅ 9)	(∅ 11)	(∅ 14)	(∅ 19)	(∅ 24)	(∅ 24)	(∅ 28)	(∅ 30)	(∅ 35)

14 TYPSD - Tipo Albero uscita

— Nessuna indicazione = le dimensioni dell' albero sono secondo il sistema di misura SI (mm);

TYPSD - Typ output shaft

— *No indications = The shaft dimensions are subject to the system of units SI (mm).*

TYPSD - Typ Abtriebwelle

— Keine Angabe = Die Wellendimensionen unterliegen dem Einheitensystem SI (mm)

15 SD - Diametro Albero

Diametro albero:
— Nessuna indicazione = diametro foro standard.

SD - Shaft diameter

Shaft Diameter:
— No indications = standard hole diameter.

SD - Durchmesser Abtirebswelle

Wellendurchmesser:
— Keine Angabe = Standard-Bohrungsdurchmesser.

WI - WMI	**25**	**30**	**40**	**50**	**63**	**75**	**90**	**110**	**130**	**150**
Standard (mm)	11	14	18	25	25	28	35	42	45	50

1.2 Designazione

16 MPOF - Lato Flangia Uscita

— Nessuna indicazione = flangia uscita con montaggio destro (flange dal lato come indicato nelle figure);

SIN = flange uscita con montaggio sinistro (flange dal lato opposto alle figure indicate).

1.2 Designation

MPOF - Mounting Position Output

— No indication (standard) = output flange on right side (like indicated in the figures);

***SIN** = output flange on left side (flanges on the opposite side like indicated in figures).*

1.2 Bezeichnung

MPOF - Montageseite Abtiebsflansch

— Keine Angabe (Standard) = Abtriebs- flansch rechts (wie in den Abbildungen dargestellt)

SIN = Abtriebsflansch links (gegenüber der Position in den Katalogabbildungen).

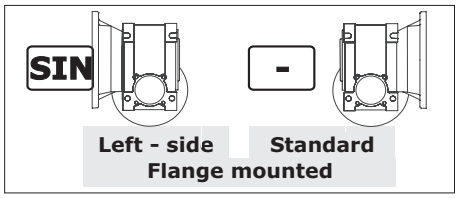

17 MP - Posizioni di montaggio

[M2, M3, M4, M5, M6] Posizioni di montaggio con indicazione dei tappi di livello, carico e scarico; se non specificato si considera standard la posizione **M1** (vedi par. 1.4)

MP - Mounting positions

***[M2, M3, M4, M5, M6]** Mounting position with indication of breatherm level and drain plugs; if not specified, standard position is **M1** (see par. 1.4).*

MP - Einbaulagen

Montageposition **[M2, M3, M4, M5, M6]** mit Angabe von . Entlüftung, Schaugläsern und Ablaßschraube. Wenn nicht näher spezifiziert, wird die Standard - position **M1** zugrunde gelegt (s. Abschnitt 1.4).

18 OPT-ACC. - Opzioni

OPT-ACC - Options

OPT-ACC. - Optionen

vedi par. 1.9 see pa. 1.9 s. Abschnitt 1.9	ACC1	AL	Alberi lenti - AL	Output shafts - AL	Abtriebswellen - AL
		AL_BU	Alberi lenti Bisporgenti - AL_BU	Double Output shafts - AL_BU	Beidseitige Abtriebswellen - AL_BU
		PROT.	Coperchio di protezione	Protection cover	Schultzvorrichtungdeckel
	ACC3	BRS_VKL	Braccio Reazione Semplice_con boccola_VKL	Torque arm - Single_with VKL_bushing	Drehmomentstütze - Normal_mit VKL - Buchse
vedi Sezione A-1.12 see Section A-1.12 s. Abschnitt A-1.12	OPT.	OPT	Materiale degli anelli di tenuta	Materials of Seals	Dichtungsstoffe
		OPT1	Stato fornitura olio	Scope of the supply - Options - OIL	Optionen - Lieferzustand - Optionen - Öl
		OPT2	Verniciatura	Painting and surface protection	Lackierung und Oberflächenschutzl

19 PMT - Posizioni della Morsettiera

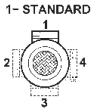

[2, 3, 4] Posizione della morsettiera del motore se diversa da quella standard (1).

PMT - Position Terminal Box

***[2, 3, 4]** Position of the motor terminal box if different from the standard one (1).*

PMT - Montagposition Klemmenkasten

Montageposition Klemmenkasten **[2, 3, 4],** wenn abweichend von Standardposition [1] (für Motorgetriebe).

D

1.4 Lubrificazione

1.4 Lubrication

1.4 Schmierung

Posizioni di montaggio
Mounting positions
Montagepositionen

WI - WMI

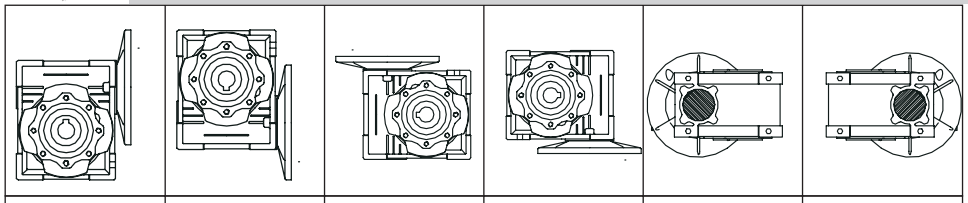

M1	M2	M3	M4	M5	M6

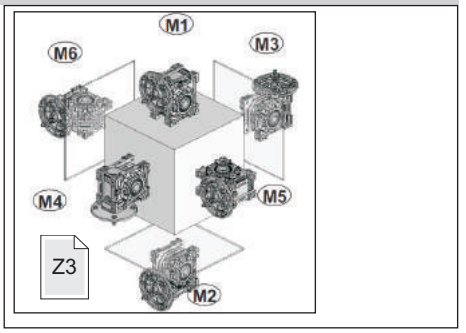

	Posizioni di montaggio - Mounting positions - Montagepositionen		
		Posizioni Positions Positionen	Prescrizioni da indicare in fase d'ordine Ordering requirements Anforderungen bei der Bestellung
WI WMI	25	M1-M2 M3-M4 M5-M6	**Non necessaria** ***Not necessary*** **Nicht erforderlich**
	30		
	40		
	50		
	63		
	75		
	90		
	110	M1-M2 M3-M4 M5-M6	**Necessaria** **Necessary** **Erforderlich**
	130		
	150		

	Quantità di lubrificante - *Lubricant Quantity - Schmiermittelmenge - [Kg]*							OPT1	Tappi-Plug-Stopfen		
		M1	M2	M3	M4	M5	M6		N°	Diameter	Type
	25	0.020						INOIL_STD	1	1/8"	
	30	0.040							1	1/8"	
	40	0.080							1	1/8"	
	50	0.150							1	1/8"	
	63	0.300							1	3/8"	
	75	0.550							1	3/8"	
	90	1.000							1	3/8"	
	110	3.000	2.200	3.000	2.200	2.500	2.500	OUTOIL	3	3/8"	
	130	4.500	3.300	4.500	3.300	3.500	3.500		3	3/8"	
	150	7.000	5.100	7.000	5.100	5.400	5.400		3	3/8"	

Quantità indicative; durante il riempimento attenersi alla spia di livello.

Indicative quantities, check the oil sight glass during filling.

Richtungsweisende Mengen, bei der Auffüllung auf das Füllstand-Kontrollfenster Bezug nehmen.

Attentione !:
Il tappo di sfiato è allegato solo nei riduttori che hanno più di un tappo olio

Warning!:
A breather plug is supplied only with worm gearboxes that have more than one oil plug

Achtung!:
Der Entlüftungsstopfen ist lediglich bei den Getrieben vorhanden, die über mehr als einen Ölfüllstopfen verfügen

Nota: Se in fase d'ordine la posizione di montaggio è omessa, il riduttore verrà fornito con i tappi predisposti per la posizione M1.

Eventuali forniture con predisposizioni tappi diverse da quella indicata in tabella, dovranno essere concordate.

Note: If the mounting position is not specified in the order, the worm gearbox supplied will have plugs pre-arranged for position M1.

The supply of gearboxes with different plug pre-arrangements has to be agreed with the manufacturer.

Anmerkung:Sollte in der Auftragsphase die Einbaulage nicht angegeben werden, wird das Getriebe mit Stopfen für die Einbaulage M1.

Lieferungen, die eine Auslegung hinsichtlich der Stopfen aufweisen, die von den Angaben in der Tabelle abweichen, müssen vorab vereinbart werden..

1.5 Carichi radiali e assiali

Il carico radiale sull'albero si calcola con la seguente formula:

$$Fre = \frac{2000 \cdot M \cdot fz}{D} \leq Fr1 \text{ o } Fr2$$

Fre (N)
Carico radiale risultante
M (Nm)
Momento torcente sull'albero
D (mm)
Diametro dell'elemento di trasmissione montato sull'albero
Fr (N)
Valore di carico radiale massimo ammesso (ved. tabelle relative)

fz = 1,1 pignone dentato
1,4 ruota per catena
1,7 puleggia a gola
2,5 puleggia piana

Quando il carico radiale risultante non è applicato sulla mezzeria dell'albero occorre calcolare quello effettivo con la seguente formula:

$$Fre \leq \frac{Fr \cdot a}{(b + x)} \leq Fr1max \text{ o } Fr2max$$

a , b , x = valori riportati nelle tabelle

1.5 Axial and overhung loads

The radial load on the shaft is calculated with the following formula:

$$Fre = \frac{2000 \cdot M \cdot fz}{D} \leq Fr1 \text{ o } Fr2$$

Fre (N)
Resulting radial load
M (Nm)
Torque on the shaft
D (mm)
Diameter of the transmission member mounted on the shaft
Fr (N)
Value of the maximum admitted radial load (see relative tables)

fz = 1,1 gear pinion
1,4 chain wheel
1,7 v-pulley
2,5 flat pulley

When the resulting radial load is not applied on the centre line of the shaft it is necessary to calculate the effective load with the following formula:

$$Fre \leq \frac{Fr \cdot a}{(b + x)} \leq Fr1max \text{ o } Fr2max$$

a , b , x = values given in the tables

1.5 Radiale und Axiale Belastungen

Die Querbelastung (Querkraft) auf der Welle wird durch nachstehende Formel berechnet:

$$Fre = \frac{2000 \cdot M \cdot fz}{D} \leq Fr1 \text{ o } Fr2$$

Fre (N)
resultierende Querkraft
M (Nm)
Wellendrehmoment
D (mm)
Durchmesser des an der Welle montierten Antriebselements
Fr (N)
max. zul. Querkraft (siehe entspr. Tafel)

fz = 1,1 Zahnrad
1,4 Rad für Kette
1,7 Flanschscheibe
2,5 Flachriemenscheibe

Wenn die Querkraft nicht auf die Mitte der Welle bezogen ist, ist die effektive Kraft durch nachstehende Formel zu berechnen:

$$Fre \leq \frac{Fr \cdot a}{(b + x)} \leq Fr1max \text{ o } Fr2max$$

a , b , x: siehe Tafeln

ALBERI IN USCITA

OUTPUT SHAFTS

ABTRIEBSWELLEN

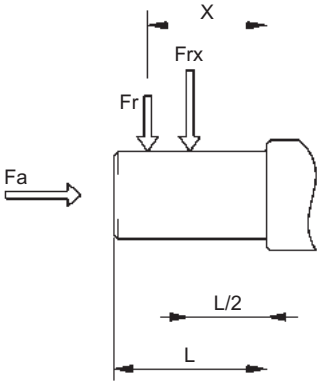

WI WMI	Fr_2 (N)									
	25	30	40	50	63	75	90	110	130	150
a	50	65	84	101	120	131	162	176	188	215
b	38	50	64	76	95	101	122	136	148	174
Fr2 max	1350	1830	3490	4840	6270	7380	8180	12000	13500	18000

ALBERI IN ENTRATA

INPUT SHAFTS

ANTRIEBSWELLEN

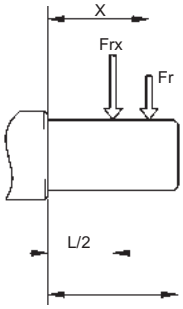

WI	Fr_1 (N)								
	30	40	50	63	75	90	110	130	150
a	86	106	129	159	192	227	266	314	350
b	76	94.5	114	139	167	202	236	274	310
Fr1 max	210	350	490	700	980	1270	1700	2100	2800

1.5 Carichi radiali e assiali

1.5 Axial and overhung loads

1.5 Radiale und Axiale Belastungen

Valore di carico radiale massimo ammesso

Value of the maximum admitted radial load

Max. zul. Querkraft

WMI 25

ir	n_1 = 2800		n_1 = 1400		n_1 = 900		n_1 = 500	
	F_{r1} N	F_{r2} N	F_{r1} N	F_{r2} N	F_{r1} N	F_{r2} N	F_{r1} N	F_{r2} N
7.5				503				
10				553				
15				633				
20				697				
-				-				
30	-		-	798	-		-	
40				878				
50				946				
60				1006				
-				-				
-				-				

WI-WMI 30

ir	n_1 = 2800		n_1 = 1400		n_1 = 900		n_1 = 500	
	F_{r1} N	F_{r2} N	F_{r1} N	F_{r2} N	F_{r1} N	F_{r2} N	F_{r1} N	F_{r2} N
7.5	125	542	150	683	175	792	210	963
10	140	597	169	752	197	871	210	1060
15	140	683	169	861	197	997	210	1213
20	146	752	190	948	210	1098	210	1336
25	210	810	210	1021	210	1183	210	1439
30	210	861	210	1085	210	1257	210	1529
40	127	948	210	1194	210	1383	210	1683
50	128	1021	210	1286	210	1490	210	1813
60	126	1085	210	1367	210	1583	210	1830
80	130	1194	210	1504	210	1743	210	1830
100	-	-	-	-	-	-	-	-

WI-WMI 40

ir	n_1 = 2800		n_1 = 1400		n_1 = 900		n_1 = 500	
	F_{r1} N	F_{r2} N	F_{r1} N	F_{r2} N	F_{r1} N	F_{r2} N	F_{r1} N	F_{r2} N
7.5	233	1044	294	1315	319	1524	350	1853
10	272	1149	331	1447	350	1677	350	2040
15	291	1315	331	1657	350	1920	350	2335
20	204	1447	350	1824	350	2113	350	2570
25	236	1559	350	1964	350	2276	350	2769
30	350	1657	350	2087	350	2419	350	2942
40	350	1824	350	2298	350	2662	350	3238
50	350	1964	350	2475	350	2868	350	3488
60	350	2087	350	2630	350	3047	350	3490
80	350	2298	350	2895	350	3354	350	3490
100	350	2475	350	3118	350	3490	350	3490

WI-WMI 50

ir	n_1 = 2800		n_1 = 1400		n_1 = 900		n_1 = 500	
	F_{r1} N	F_{r2} N	F_{r1} N	F_{r2} N	F_{r1} N	F_{r2} N	F_{r1} N	F_{r2} N
7.5	324	1433	401	1805	448	2091	490	2544
10	378	1577	490	1987	490	2302	490	2800
15	399	1805	490	2274	490	2635	490	3205
20	417	1987	490	2503	490	2900	490	3528
25	482	2140	490	2696	490	3124	490	3800
30	490	2274	490	2865	490	3320	490	4038
40	490	2503	490	3153	490	3654	490	4445
50	490	2696	490	3397	490	3936	490	4788
60	490	2865	490	3610	490	4183	490	4840
80	490	3153	490	3973	490	4604	490	4840
100	490	3397	490	4280	490	4840	490	4840

WI-WMI 63

ir	n_1 = 2800		n_1 = 1400		n_1 = 900		n_1 = 500	
	F_{r1} N	F_{r2} N	F_{r1} N	F_{r2} N	F_{r1} N	F_{r2} N	F_{r1} N	F_{r2} N
7.5	395	1873	500	2359	580	2734	700	3325
10	463	2061	571	2597	661	3009	700	3660
15	492	2359	615	2973	670	3444	700	4190
20	538	2597	667	3272	700	3791	700	4611
25	593	2797	700	3524	700	4084	700	4967
30	700	2973	700	3745	700	4339	700	5279
40	700	3272	700	4122	700	4776	700	5810
50	700	3524	700	4440	700	5145	700	6259
60	700	3745	700	4719	700	5467	700	6270
80	700	4122	700	5193	700	6018	700	6270
100	700	4440	700	5595	700	6270	700	6270

WI-WMI 75

ir	n_1 = 2800		n_1 = 1400		n_1 = 900		n_1 = 500	
	F_{r1} N	F_{r2} N	F_{r1} N	F_{r2} N	F_{r1} N	F_{r2} N	F_{r1} N	F_{r2} N
7.5	560	2210	700	2785	810	3227	980	3925
10	703	2433	830	3065	975	3551	980	4320
15	727	2785	851	3509	980	4065	980	4945
20	872	3065	980	3862	980	4474	980	5443
25	980	3302	980	4160	980	4820	980	5863
30	980	3509	980	4421	980	5122	980	6231
40	980	3862	980	4865	980	5637	980	6858
50	980	4160	980	5241	980	6073	980	7380
60	980	4421	980	5569	980	6453	980	7380
80	980	4865	980	6130	980	7103	980	7380
100	980	5241	980	6603	980	7380	980	7380

1.5 Carichi radiali e assiali

1.5 Axial and overhung loads

1.5 Radiale und Axiale Belastungen

Valore di carico radiale massimo ammesso

Value of the maximum admitted radial load

Max. zul. Querkraft

WI-WMI 90

ir	n_1 = 2800		n_1 = 1400		n_1 = 900		n_1 = 500	
	F_{r1} N	F_{r2} N	F_{r1} N	F_{r2} N	F_{r1} N	F_{r2} N	F_{r1} N	F_{r2} N
7.5	715	2446	900	3081	1040	3570	1270	4343
10	900	2692	1082	3391	1270	3929	1270	4780
15	1034	3081	1257	3882	1270	4498	1270	5472
20	1120	3391	1270	4273	1270	4951	1270	6022
25	1270	3653	1270	4603	1270	5333	1270	6487
30	1270	3882	1270	4891	1270	5667	1270	6894
40	1270	4273	1270	5383	1270	6238	1270	7588
50	1270	4603	1270	5799	1270	6719	1270	8174
60	1270	4891	1270	6163	1270	7140	1270	8180
80	1270	5383	1270	6783	1270	7859	1270	8180
100	1270	5799	1270	7306	1270	8180	1270	8180

WI-WMI 110

ir	n_1 = 2800		n_1 = 1400		n_1 = 900		n_1 = 500	
	F_{r1} N	F_{r2} N	F_{r1} N	F_{r2} N	F_{r1} N	F_{r2} N	F_{r1} N	F_{r2} N
7.5	950	3090	1200	3893	1390	4511	1700	5488
10	1194	3401	1463	4285	1700	4965	1700	6040
15	1337	3893	1604	4905	1700	5684	1700	6914
20	1485	4285	1700	5399	1700	6256	1700	7610
25	1700	4616	1700	5816	1700	6739	1700	8198
30	1700	4905	1700	6181	1700	7161	1700	8711
40	1700	5399	1700	6803	1700	7882	1700	9588
50	1700	5816	1700	7328	1700	8491	1700	10320
60	1700	6181	1700	7787	1700	9023	1700	10320
80	1700	6803	1700	8571	1700	9931	1700	10320
100	1700	7328	1700	9232	1700	10320	1700	10320

WI-WMI 130

ir	n_1 = 2800		n_1 = 1400		n_1 = 900		n_1 = 500	
	F_{r1} N	F_{r2} N	F_{r1} N	F_{r2} N	F_{r1} N	F_{r2} N	F_{r1} N	F_{r2} N
7.5	1190	4042	1500	5092	1740	5901	2100	7178
10	1493	4449	1845	5605	2100	6494	2100	7900
15	1725	5092	2070	6416	2100	7434	2100	9043
20	1912	5605	2100	7062	2100	8182	2100	9953
25	2100	6038	2100	7607	2100	8814	2100	10722
30	2100	6416	2100	8084	2100	9366	2100	11394
40	2100	7062	2100	8897	2100	10309	2100	12540
50	2100	7607	2100	9584	2100	11105	2100	13500
60	2100	8084	2100	10185	2100	11801	2100	13500
80	2100	8897	2100	11210	2100	12989	2100	13500
100	2100	9584	2100	12076	2100	13500	2100	13500

WI-WMI 150

ir	n_1 = 2800		n_1 = 1400		n_1 = 900		n_1 = 500	
	F_{r1} N	F_{r2} N	F_{r1} N	F_{r2} N	F_{r1} N	F_{r2} N	F_{r1} N	F_{r2} N
7.5	-		1950	6962	-		-	
10			2267	7663				
15			2285	8771				
20			2674	9654				
25			2800	10400				
30			2800	11051				
40			2800	12163				
50			2800	13103				
60			2800	13924				
80			2800	15325				
100			2800	16508				

1.6 Prestazioni riduttori WI — *1.6 WI Gearboxes performances* — 1.6 Leistungen der WI-Getriebe

WMI 25

Kg 0.7

ir	n_1 = 2800 min^{-1}			n_1 = 1400 min^{-1}			n_1 = 900 min^{-1}			n_1 = 500 min^{-1}			IEC
	n_2 min^{-1}	T_{2M} Nm	P kW	n_2 min^{-1}	T_{2M} Nm	P kW	n_2 min^{-1}	T_{2M} Nm	P kW	n_2 min^{-1}	T_{2M} Nm	P kW	
7.5				186.7	11	0.25							
10				140	12	0.21							
15				93.3	12.3	0.15							
20				70	12.4	0.12							
-				-	-	-							
30		-		46.7	13.3	0.08		-			-		56
40				35	12	0.08							
50				28	11	0.055							
60				23.3	10	0.04							
-				-	-	-							
-				-	-	-							

WI 30

Kg 1.2

ir	⚠ n_1 = 2800 min^{-1}			n_1 = 1400 min^{-1}			n_1 = 900 min^{-1}			n_1 = 500 min^{-1}			IEC
	n_2 min^{-1}	T_{2M} Nm	P kW	n_2 min^{-1}	T_{2M} Nm	P kW	n_2 min^{-1}	T_{2M} Nm	P kW	n_2 min^{-1}	T_{2M} Nm	P kW	
7.5	373.3	13	0.58	186.7	18	0.41	120	20	0.30	66.7	24	0.21	
10	280	13	0.45	140	18	0.32	90	20	0.24	50	24	0.16	
15	186.7	13	0.31	93.3	18	0.23	60	20	0.17	33.3	24	0.12	
20	140	12	0.23	70	18	0.18	45	19	0.13	25	23	0.09	56-63
25	112	15	0.25	56	20	0.18	36	23	0.14	20	29	0.10	
30	93.3	15	0.21	46.7	20	0.15	30	21	0.11	16.7	26	0.08	
40	70	14	0.16	35	18	0.11	22.5	21	0.09	12.5	24	0.06	
50	56	12	0.12	28	17	0.09	18	19	0.07	10	22	0.05	
60	46.7	12	0.10	23.3	16	0.08	15	18	0.06	8.3	20	0.04	56
80	35	11	0.08	17.5	12	0.05	11.3	14	0.04	6.3	17	0.03	
-	-	-	-	-	-	-	-	-	-	-	-	-	—

WI 40

Kg 2.3

ir	⚠ n_1 = 2800 min^{-1}			n_1 = 1400 min^{-1}			n_1 = 900 min^{-1}			n_1 = 500 min^{-1}			IEC
	n_2 min^{-1}	T_{2M} Nm	P kW	n_2 min^{-1}	T_{2M} Nm	P kW	n_2 min^{-1}	T_{2M} Nm	P kW	n_2 min^{-1}	T_{2M} Nm	P kW	
7.5	373.3	27	1.20	186.7	40	0.90	120	43	0.65	66.7	53	0.45	
10	280	30	1.00	140	40	0.69	90	44	0.50	50	53	0.35	
15	186.7	31	0.72	93.3	39	0.48	60	45	0.36	33.3	56	0.26	
20	140	29	0.52	70	39	0.37	45	44	0.28	25	52	0.19	63-71
25	112	28	0.42	56	38	0.30	36	44	0.23	20	49	0.15	
30	93.3	34	0.44	46.7	44	0.31	30	48	0.23	16.7	58	0.16	
40	70	31	0.32	35	41	0.23	22.5	44	0.17	12.5	53	0.12	
50	56	30	0.26	28	37	0.18	18	43	0.14	10	52	0.10	
60	46.7	27	0.21	23.3	35	0.15	15	38	0.11	8.3	46	0.08	56-63
80	35	25	0.16	17.5	33	0.12	11.3	37	0.09	6.3	40	0.06	
100	28	22	0.12	14	29	0.09	9	33	0.07	5.0	38	0.05	

WI 50

Kg 3.5

ir	⚠ n_1 = 2800 min^{-1}			n_1 = 1400 min^{-1}			n_1 = 900 min^{-1}			n_1 = 500 min^{-1}			IEC
	n_2 min^{-1}	T_{2M} Nm	P kW	n_2 min^{-1}	T_{2M} Nm	P kW	n_2 min^{-1}	T_{2M} Nm	P kW	n_2 min^{-1}	T_{2M} Nm	P kW	
7.5	373.3	52	2.3	186.7	71	1.6	120	81	1.2	66.7	102	0.86	
10	280	53	1.8	140	70	1.2	90	83	0.94	50	104	0.67	
15	186.7	57	1.3	93.3	73	0.88	60	84	0.67	33.3	102	0.47	
20	140	53	0.95	70	72	0.68	45	76	0.48	25	92	0.33	71-80
25	112	51	0.75	56	69	0.54	36	76	0.39	20	94	0.28	
30	93.3	65	0.82	46.7	83	0.57	30	91	0.42	16.7	106	0.29	
40	70	59	0.59	35	77	0.42	22.5	83	0.31	12.5	99	0.22	
50	56	53	0.45	28	73	0.34	18	78	0.25	10	89	0.17	63-71
60	46.7	50	0.37	23.3	68	0.28	15	74	0.21	8.3	82	0.14	
80	35	45	0.27	17.5	64	0.22	11.3	66	0.16	6.3	75	0.11	
100	28	40	0.21	14	52	0.16	9	56	0.12	5.0	69	0.09	63

1.6 Prestazioni riduttori WI — *1.6 WI Gearboxes performances* — 1.6 Leistungen der WI-Getriebe

WI 63

Kg 6.2

ir	n_1 = 2800 min^{-1}			n_1 = 1400 min^{-1}			n_1 = 900 min^{-1}			n_1 = 500 min^{-1}			IEC
	n_2 min^{-1}	T_{2M} Nm	P kW	n_2 min^{-1}	T_{2M} Nm	P kW	n_2 min^{-1}	T_{2M} Nm	P kW	n_2 min^{-1}	T_{2M} Nm	P kW	
7.5	373.3	92	4.0	186.7	126	2.8	120	151	2.2	66.7	180	1.5	80-90
10	280	96	3.2	140	129	2.2	90	152	1.7	50	188	1.2	
15	186.7	101	2.3	93.3	134	1.6	60	153	1.2	33.3	188	0.85	
20	140	97	1.7	70	131	1.2	45	149	0.91	25	178	0.63	
25	112	91	1.3	56	131	1.0	36	135	0.69	20	163	0.48	
30	93.3	120	1.5	46.7	164	1.1	30	176	0.79	16.7	204	0.54	
40	70	113	1.1	35	143	0.76	22.5	160	0.58	12.5	186	0.40	71-80
50	56	102	0.83	28	133	0.60	18	146	0.45	10	174	0.32	
60	46.7	96	0.68	23.3	130	0.51	15	137	0.37	8.3	162	0.26	
80	35	86	0.49	17.5	119	0.39	11.3	127	0.29	6.3	138	0.19	71
100	28	74	0.37	14	118	0.34	9	125	0.25	5.0	131	0.16	

WI 75

Kg 9.0

ir	n_1 = 2800 min^{-1}			n_1 = 1400 min^{-1}			n_1 = 900 min^{-1}			n_1 = 500 min^{-1}			IEC
	n_2 min^{-1}	T_{2M} Nm	P kW	n_2 min^{-1}	T_{2M} Nm	P kW	n_2 min^{-1}	T_{2M} Nm	P kW	n_2 min^{-1}	T_{2M} Nm	P kW	
7.5	373.3	128	5.6	186.7	185	4.1	120	212	3.1	66.7	253	2.1	90-100-112
10	280	141	4.7	140	190	3.2	90	223	2.5	50	266	1.7	
15	186.7	150	3.4	93.3	198	2.3	60	232	1.8	33.3	268	1.2	
20	140	160	2.8	70	210	1.9	45	232	1.4	25	281	0.98	80-90
25	112	147	2.1	56	202	1.5	36	219	1.1	20	251	0.73	
30	93.3	170	2.1	46.7	233	1.5	30	249	1.1	16.7	299	0.77	
40	70	166	1.6	35	216	1.1	22.5	236	0.83	12.5	279	0.58	
50	56	149	1.2	28	206	0.89	18	217	0.65	10	248	0.44	71-80
60	46.7	143	1.0	23.3	197	0.75	15	206	0.54	8.3	234	0.37	
80	35	130	0.72	17.5	187	0.58	11.3	200	0.43	6.3	220	0.29	
100	28	123	0.58	14	180	0.48	9	191	0.36	5.0	206	0.24	

WI 90

Kg 13.0

ir	n_1 = 2800 min^{-1}			n_1 = 1400 min^{-1}			n_1 = 900 min^{-1}			n_1 = 500 min^{-1}			IEC
	n_2 min^{-1}	T_{2M} Nm	P kW	n_2 min^{-1}	T_{2M} Nm	P kW	n_2 min^{-1}	T_{2M} Nm	P kW	n_2 min^{-1}	T_{2M} Nm	P kW	
7.5	373.3	207	8.9	186.7	287	6.3	120	336	4.8	66.7	406	3.3	90-110-112
10	280	236	7.7	140	306	5.1	90	365	4.0	50	433	2.7	
15	186.7	270	6.0	93.3	357	4.1	60	410	3.1	33.3	488	2.1	
20	140	258	4.4	70	351	3.1	45	395	2.3	25	477	1.6	
25	112	246	3.4	56	332	2.4	36	372	1.8	20	430	1.2	
30	93.3	311	3.7	46.7	415	2.6	30	454	1.9	16.7	568	1.4	
40	70	280	2.6	35	363	1.8	22.5	422	1.4	12.5	486	0.95	80-90
50	56	263	2.0	28	339	1.4	18	391	1.1	10	451	0.75	
60	46.7	242	1.6	23.3	307	1.1	15	350	0.86	8.3	407	0.59	
80	35	229	1.2	17.5	285	0.83	11.3	314	0.63	6.3	368	0.45	80
100	28	203	0.9	14	270	0.67	9	281	0.49	5.0	328	0.35	

WI 110

Kg 22.0

ir	n_1 = 2800 min^{-1}			n_1 = 1400 min^{-1}			n_1 = 900 min^{-1}			n_1 = 500 min^{-1}			IEC
	n_2 min^{-1}	T_{2M} Nm	P kW	n_2 min^{-1}	T_{2M} Nm	P kW	n_2 min^{-1}	T_{2M} Nm	P kW	n_2 min^{-1}	T_{2M} Nm	P kW	
7.5	373.3	386	16.6	186.7	546	12	120	644	9.2	66.7	788	6.4	100-112-132
10	280	433	14.1	140	588	9.8	90	702	7.6	50	844	5.2	
15	186.7	482	10.7	93.3	660	7.5	60	749	5.6	33.3	906	3.9	
20	140	475	8.0	70	649	5.6	45	722	4.1	25	856	2.8	
25	112	499	6.8	56	665	4.7	36	752	3.5	20	894	2.4	90-100-112
30	93.3	552	6.5	46.7	727	4.5	30	847	3.5	16.7	988	2.4	
40	70	519	4.7	35	693	3.3	22.5	785	2.5	12.5	909	1.7	
50	56	498	3.7	28	656	2.6	18	753	2.0	10	882	1.4	
60	46.7	472	3.0	23.3	620	2.1	15	693	1.6	8.3	810	1.1	
80	35	398	2.0	17.5	512	1.4	11.3	586	1.1	6.3	668	0.76	80-90
100	28	382	1.6	14	473	1.1	9	526	0.84	5.0	609	0.59	

1.6 Prestazioni riduttori WI

1.6 WI Gearboxes performances

1.6 Leistungen der WI-Getriebe

WI 130

Kg 48.0

ir	n_1 = 2800 min^{-1}			n_1 = 1400 min^{-1}			n_1 = 900 min^{-1}			n_1 = 500 min^{-1}			IEC
	n_2 min^{-1}	T_{2M} Nm	P kW	n_2 min^{-1}	T_{2M} Nm	P kW	n_2 min^{-1}	T_{2M} Nm	P kW	n_2 min^{-1}	T_{2M} Nm	P kW	
7.5	373.3	514	22.1	186.7	741	16.1	120	871	12.3	66.7	1071	8.6	132
10	280	574	18.7	140	820	13.5	90	951	10.3	50	1153	7.1	
15	186.7	669	14.7	93.3	917	10.3	60	1055	7.8	33.3	1293	5.5	
20	140	660	11	70	905	7.8	45	1022	5.8	25	1222	4.0	
25	112	660	9.0	56	931	6.5	36	1031	4.8	20	1192	3.2	100-112-132
30	93.3	774	9.0	46.7	1047	6.4	30	1152	4.7	16.7	1378	3.3	
40	70	727	6.5	35	1043	4.9	22.5	1099	3.5	12.5	1284	2.4	
50	56	696	5.1	28	972	3.8	18	1017	2.7	10	1216	1.9	100-112
60	46.7	638	4.0	23.3	928	3.1	15	923	2.1	8.3	1105	1.5	
80	35	606	3.0	17.5	853	2.3	11.3	852	1.6	6.3	967	1.1	90-100-112
100	28	525	2.2	14	742	1.7	9	751	1.2	5.0	877	0.85	

WI 150

Kg 84.0

ir	n_1 = 2800 min^{-1}			n_1 = 1400 min^{-1}			n_1 = 900 min^{-1}			n_1 = 500 min^{-1}			IEC
	n_2 min^{-1}	T_{2M} Nm	P kW	n_2 min^{-1}	T_{2M} Nm	P kW	n_2 min^{-1}	T_{2M} Nm	P kW	n_2 min^{-1}	T_{2M} Nm	P kW	
7.5				186.7	1200	25.5							160
10				140	1240	19.5							
15				93.3	1250	13.5							
20				70	1300	10.5							132-160
25				56	1200	8.8							132
30		-		46.7	1200	7.4		-			-		
40				35	1550	7.4							
50				28	1400	5.5							100-112-132
60				23.3	1260	4.4							100-112
80				17.5	1150	3.2							
100				14	1000	2.4							

ATTENZIONE!
Per situazioni con velocità di ingresso particolari attenersi alla tabella sotto riportata che evidenzia situazioni critiche per ogni riduttore (Vedere paragrafo

WARNING!
If in presence of non standard input speed please attain to the chart below considering extreme usage conditions for each gearbox (Look at chapter 1.2-A).

ACHTUNG!
Mit unstandardisierte Antriebsgeschwindigkeit bitte auf folgende Liste Bezug nehmen in Betrachtung der schwierigen Arbeitsbedingungen fuer jede

	UI - RI - WI													
	25	**28**	**30**	**40**	**50**	**63**	**70**	**75**	**85**	**90**	**110**	**130**	**150**	**180**
1500 < n_1 < 3000	OK	OK	OK	OK	OK	**Contattare il ns. servizio tecnico** *Contact our technical dept* **Wenden Sie sich an unseren technischen Service**								
n_1 > 3000														

I pesi riportati sono indicativi e possono variare in funzione della versione del riduttore.

N.B. Per i riduttori evidenziati dal doppio bordo nella colonna delle potenze è necessario verificare lo scambio termico del riduttore (come nel par. 1.7-A). Per maggiori informazioni contattare l'ufficio

Listed weights are for reference only and can vary according to the gearbox version.

NOTE. Please pay attention to the frame around the input power value: for this gearboxes it's important to check the thermal capacity (comp. chapter 1.7-A). For details please contact our technical

Die angegebenen Gewichte sind Richtwerte und können je nach Getriebeversion etwas variieren.

HINWEIS. Sind in den Tabellen Nennleistungen eingerahmt, so ist die thermische Leistungsgrenze der Getriebe zu beachten (s. S. 1.7-A).
Für weitere Informationen wenden Sie sich

Dimensioni riduttori
Gearboxes dimensions
Abmessungen Getriebes

WI - WMI

25

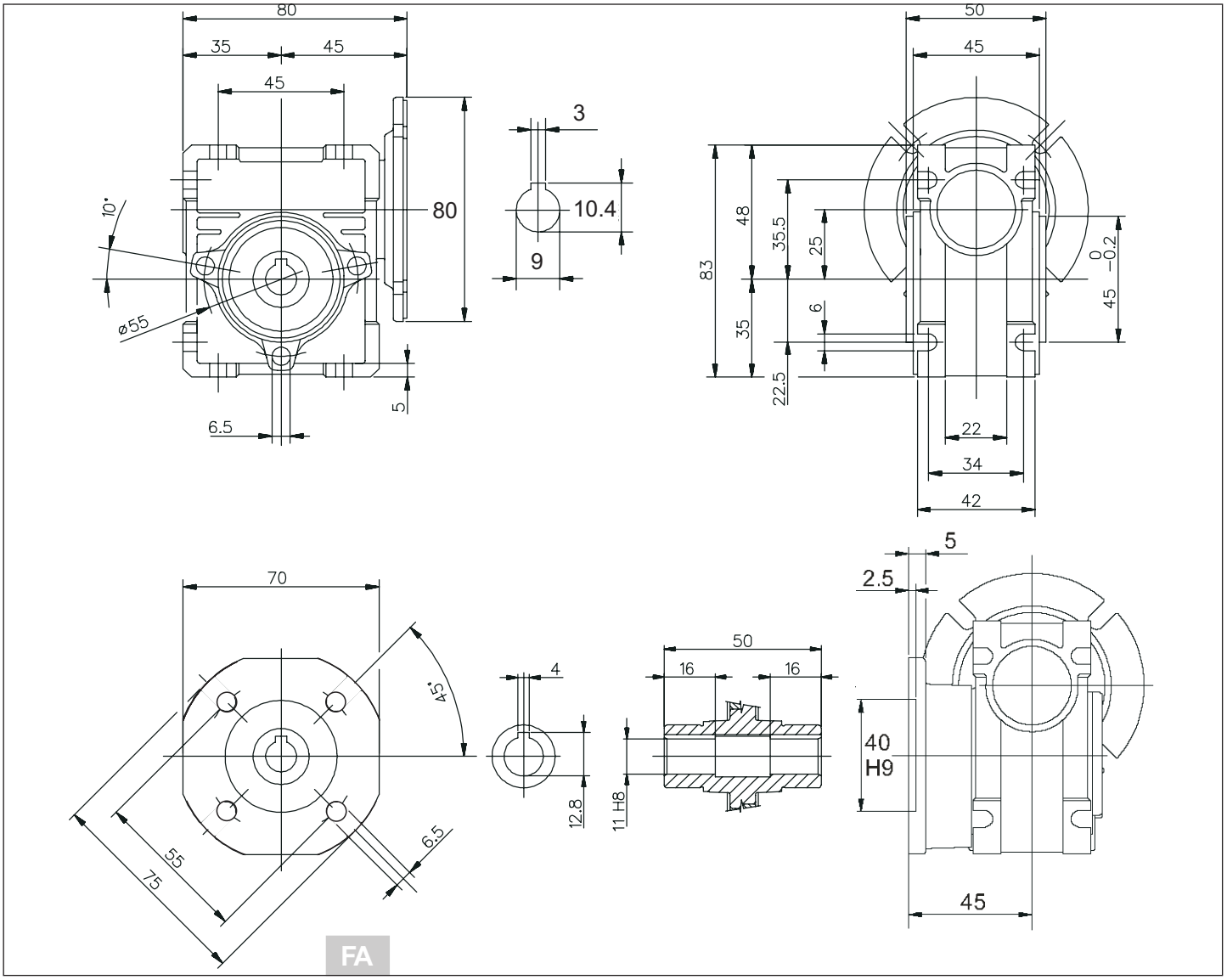

D

Dimensioni riduttori
Gearboxes dimensions
Abmessungen Getriebes

WI - WMI

30-40-50-63-75-90-110-130

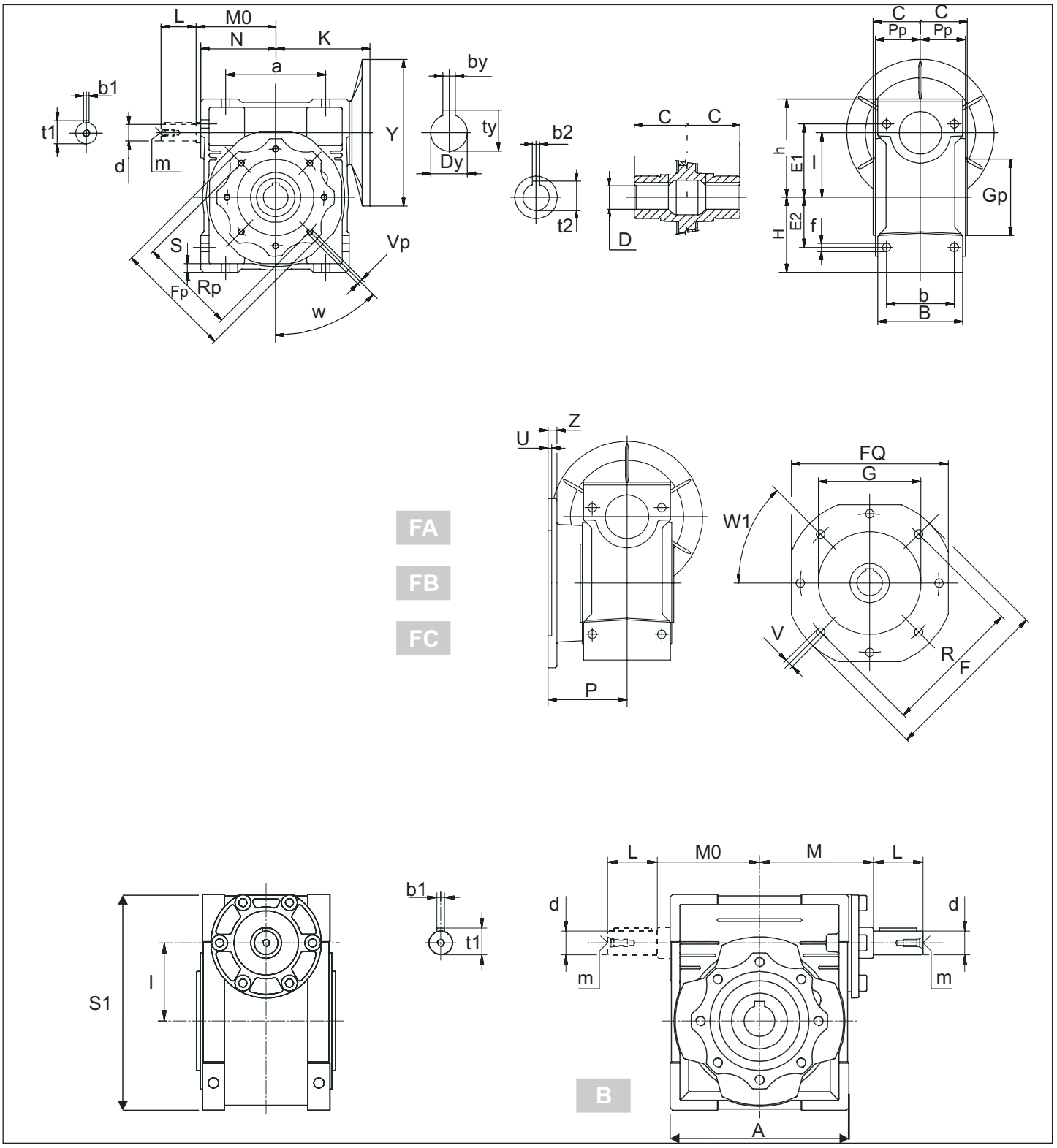

1.8 Dimensioni *1.8 Dimensions* 1.8 Abmessungen

WI WMI	A	a	B	b	C	D H7	d j6	E1	E2	f	h	H	I	L	M	M0	m	N	S	S1
30	80	54	56	44	31,5	14	9	44	27	6,5	57	40	30	20	51	45	-	40	5,5	97
40	100	70	71	60	39	18	11	55	35	6,5	71,5	50	40	23	60	53	-	50	6,5	121.5
50	120	80	85	70	46	25	14	64	40	8,5	84	60	50	30	74	64	M6	60	7	144
63	144	100	103	85	56	25	19	80	50	8,5	102	72	63	40	90	75	M6	72	8	174
75	172	120	112	90	60	28	24	93	60	11	119	86	75	50	105	90	M8	86	10	205
90	208	140	130	100	70	35	24	102	70	13	135	103	90	50	125	108	M8	103	11	238
110	252.5	170	144	115	77,5	42	28	125	85	14	167,5	127,50	110	60	142	135	M10	127,50	14	295
130	292.5	200	155	120	85	45	30	140	100	16	187,5	147,50	130	80	162	155	M10	147,50	15	335
150	340	240	185	145	100	50	35	180	120	18	230	170,00	150	80	192	175	M12	170,00	18	400

WI WMI	Fp	Gp (h8)	Pp	Rp	Up	Vp	W		b2	t2	b1	t1
30	75	55	29	65		M6X11(n,4)	0		5	16,3	3	10,2
40	87	60	36,5	75		M6X8(n,4)	45		6	20.8	4	12,5
50	100	70	43,5	85		M8X10(n,4)	45		8	28.3	5	16,0
63	110	80	53	95		M8X14(n,8)	45		8	28.3	6	21,5
75	140	95	57	115		M8X14(n,8)	45		8	31.3	8	27,0
90	160	110	67	130		M10X18(n,8)	45		10	38.3	8	27,0
110	200	130	74	165		M10X18(n,8)	45		12	45,3	8	31,0
130	250	180	81	215		M12X21(n,8)	45		14	48,8	8	33,0
150	250	180	96	215		M12X21(n,8)	45		14	53,8	10	38,0

WI WMI		F	Fq	G(F8)	P	R	U	V	Z	W1
30	FA	80	70	50	54,5	68	4	6.5(n,4)	6	45
40	FA	110	95	60	67	87	4	9(n,4)	7	45
	FC	140	-	95	76,5	115	5	9.5(n,4)	9	45
	FB	110	95	60	97	87	4	9(n,4)	7	45
50	FA	125	110	70	90	90	5	11(n,4)	9	45
	FC	160	-	110	87,5	130	5	9.5(n,4)	10	45
	FB	125	110	70	120	90	5	11(n,4)	9	45
63	FA	180	142	115	82	150	6	11(n,4)	10	45
	FC	200	-	130	99	165	5	11(n,4)	11	45
	FB	180	142	115	112	150	6	11(n,4)	10	45
75	FA	200	170	130	111	165	6	14(n,4)	13	45
90	FA	210	200	152	111	175	6	14(n,4)	13	45
110	FA	280	260	170	131	230	6	14(n,4)	15	45
130	FA	320	290	180	140	256	6	16(n,4)	15	22.50
150	FA	320	290	180	155	255	6	16(n,4)	15	22.50

WMI	30		40		50		63		75		90		110		130		150	
	Y	K	Y	K	Y	K	Y	K	Y	K	Y	K	Y	K	Y	K	Y	K
B5	120	55	120	70														
	140	55	140	70	140	80												
			160	70	160	80	160	95	160	112,5								
					200	80	200	95	200	112,5	200	129,5	200	160	200	180		
									250	112,5	250	129,5	250	160	250	180	250	210
													300	160	300	180	300	210
																	350	210
B14	80	55																
	90	55	90	70														
			105	70	105	80	105	95										
					120	80	120	95	120	112,5	120	129,5						
							140	95	140	112,5	140	129,5						
									160	112,5	160	129,5						

D

1.8 Dimensioni

1.8 Dimensions

1.8 Abmessungen

PAM B5 - Dimensioni

PAM B5 -Dimensions

PAM B5 - Abmessungen

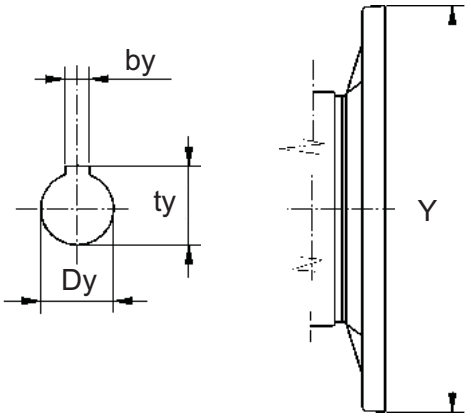

WMI	IEC										
B5	**56**	**63**	**71**	**80**	**90**	**100**	**112**	**132**	**160**	**180**	**200**
Y	120	140	160	200	200	250	250	300	350	350	400
Dy	9	11	14	19	24	28	28	38	42	48	55
by	3	4	5	6	8	8	8	10	12	14	16
ty	10.4	12.8	16.3	21.8	27.3	31.3	31.3	41.3*	45.3	51.8	59.3

PAM B14 - Dimensioni

PAM B14 -Dimensions

PAM B14 - Abmessungen

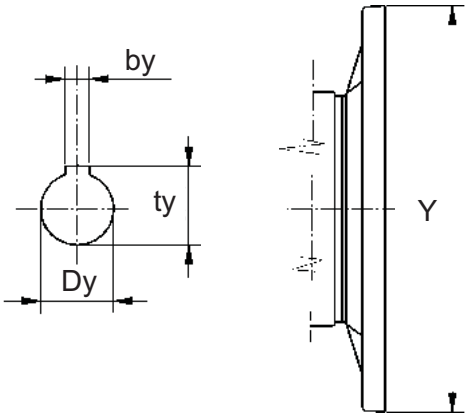

WMI	IEC							
B5	**56**	**63**	**71**	**80**	**90**	**100**	**112**	**132**
Y	80	90	105	120	140	160	160	200
Dy	9	11	14	19	24	28	28	38
by	3	4	5	6	8	8	8	10
ty	10.4	12.8	16.3	21.8	27.3	31.3	31.3	41.3*

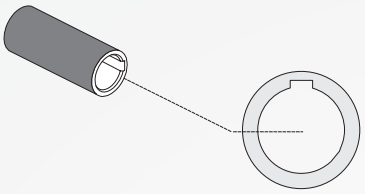

D18

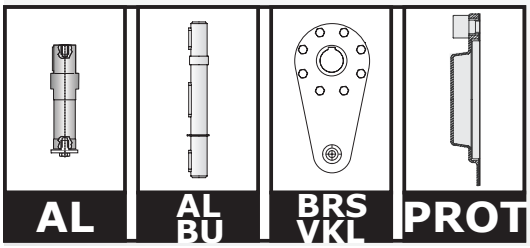

D19

1.8.1 - ALBERI LENTI

1.8.1 - OUTPUT SHAFT

1.8.1 - ABTRIEBSWELLEN

WI
WMI

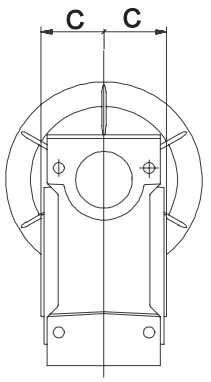

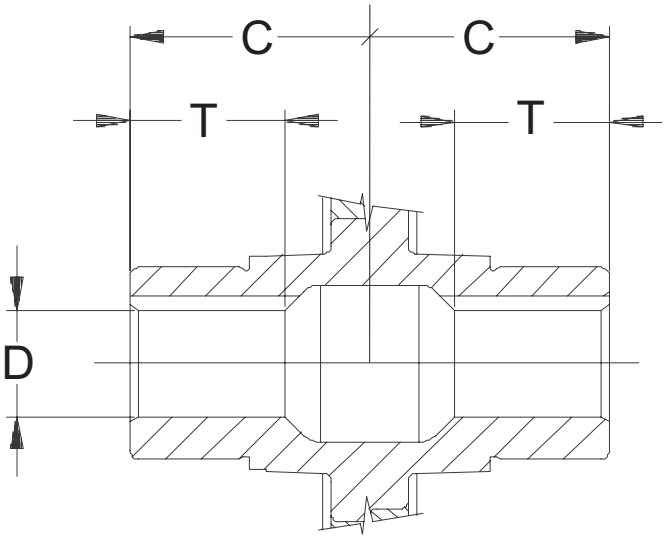

	25	30	40	50	63	75	90	110	130	150
D H7	11	14	18	25	25	28	35	42	45	50
tollerance D	H7	H7	H7	H7	H7	H7	H7	H7	H7	H7
C	25	31,5	39	46	56	60	70	77,5	85	100
T	16	21	26	30	36	40	45	50	60	72.5

Perno macchina / *Customer shaft* / Maschinachse

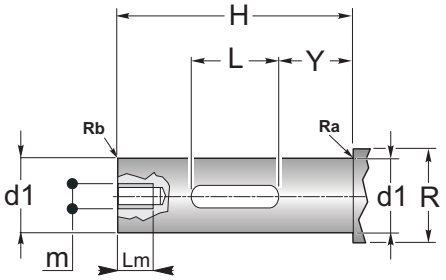

	25	30	40	50	63	75	90	110	130	150
d1	11	14	18	25	25	28	35	42	45	50
tollerance d1	g6	h6	h6	h6	h6	h6	h6	h6	h6	h6
H	45	55	70	80	100	105	120	135	145	175
L	30	40	50	55	70	75	80	95	100	130
m	M4	M6	M6	M10	M10	M10	M12	M16	M16	M16
Lm	10	16	16	25	25	25	32	40	40	40
R	15	17	22	28	34	34	42	50	58	63
Y	7.5	7.5	10	12.5	15	15	20	20	22.5	22.5

1.9 OPT - ACC. - Accessori - Opzioni

1.9 OPT - ACC. - Accessories - Options

1.9 OPT - ACC. Zubehör - Optionen

AL — AL - ALBERO LENTO SPORGENTE / AL - SINGLE OUTPUT SHAFTS

Tutti i riduttori a vite senza fine sono forniti con albero lento cavo.
A richiesta, possono essere forniti alberi lenti come indicato nei disegni dimensionali.
Le dimensioni delle linguette sono conformi alle norme UNI 6604-69.

All worm gearboxes are supplied with hollow output shaft. Output shafts as shown in the size drawings can be supplied upon request.

Sizes of feathers comply with standards UNI 6604-69.

AL BU — AL_BU - ALBERO LENTO BISPORGENTE / AL_BU - DOUBLE OUTPUT SHAFTS

Alle Schneckengetriebe werden mit hohler Abtriebswelle geliefert. Auf Anfrage können Abtriebswellen gemäß den Maßzeichnungen geliefert werden.

Die Abmessungen der Federn entsprechen den Normen UNI 6604-69.

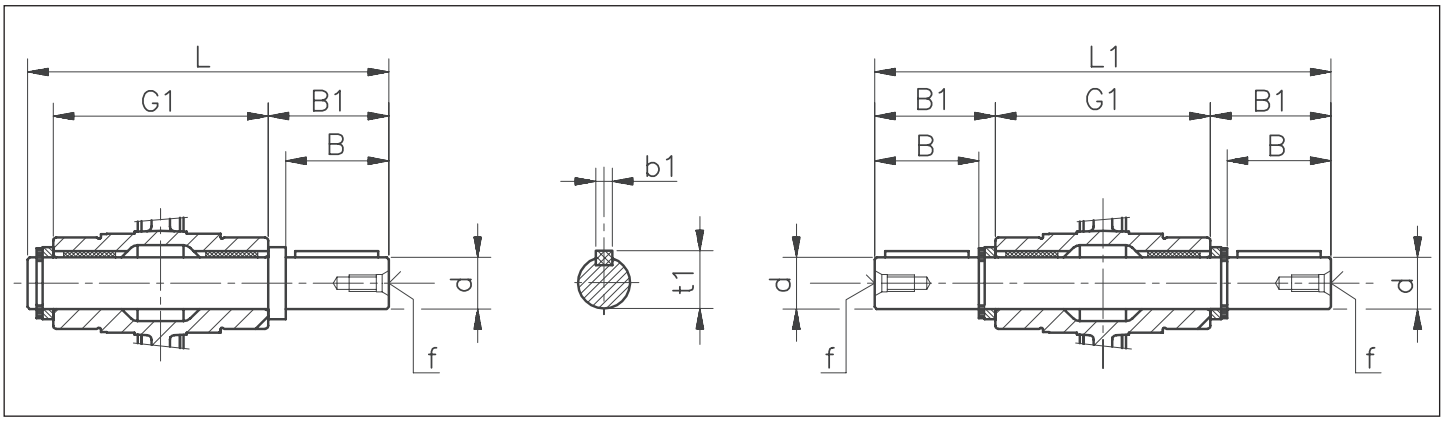

WI - WMI	25	30	40	50	63	75	90	110	130	150
d	11	14	18	25	25	28	35	42	45	50
tollerance d	h6	h6	h6	h6	h6	h6	h6	h6	h6	h6
B	23	30	40	50	50	60	80	80	80	82
B1	25,5	32,5	43	53,5	53,5	63,5	84,5	84,5	85	87
G1	50	63	78	92	112	120	140	155	170	200
L	81	102	128	153	173	192	234	249	265	297
L1	101	128	164	199	219	247	309	324	340	374
f	-	M6	M6	M10	M10	M10	M12	M16	M16	M16
b1	4	5	6	8	8	8	10	12	14	14
t1	12,5	16	20,5	28	28	31	38	45	48,5	53,5

1.9 OPT - ACC. - Accessori - Opzioni

1.9 OPT - ACC. - Accessories - Options

1.9 OPT - ACC. Zubehör - Optionen

BRS

BRS - Braccio Reazione Semplice
BRS- Torque arm – Single
BRS- Drehmomentstütze – Normal

BRS VKL

BRS_VKL - Braccio Reazione Semplice_con boccola_VKL
BRS_VKL - Torque arm - Single_with VKL_bushing
BRS_VKL - Drehmomentstütze- Normal_mit VKL - Buchse

Per il fissaggio del riduttore mediante tirante, viene fornito in allegato l'apposito

If the gearbox shall be shaft mounted as an extra part there is also

Soll das Getriebe pendelnd gelagert werden, so ist als Zubehörteil auch eine Drehmomentstütze.

25 - 30

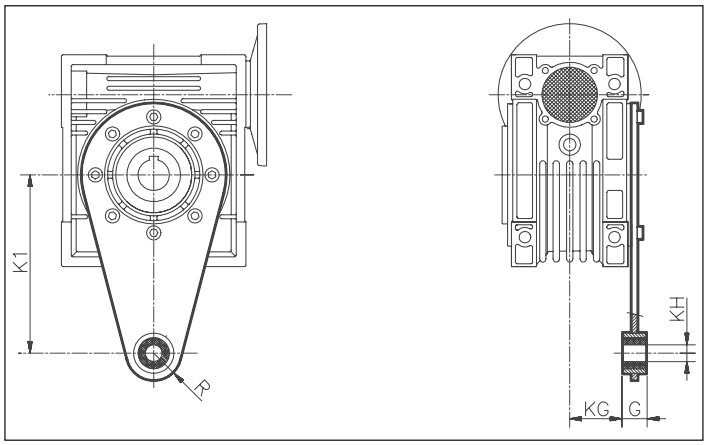

40 - 50 - 63 - 75 - 90 - 110 - 130 - 150

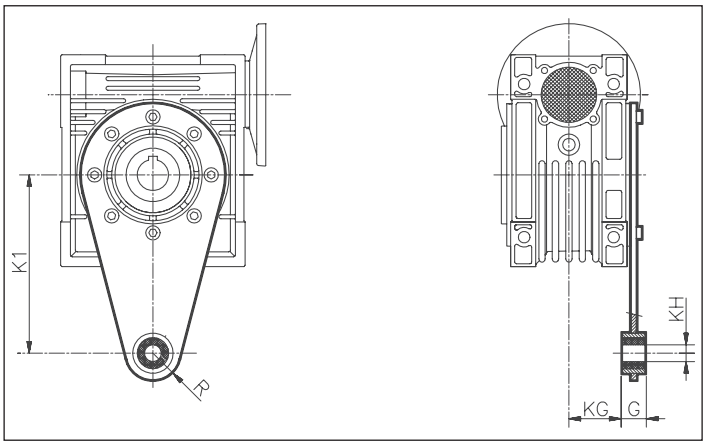

WI - WMI	25	30	40	50	63	75	90	110	130	150
K1	70	85	100	100	150	200	200	250	250	250
G	14	14	14	14	14	25	25	30	30	30
KG	17,5	24	31,5	38,5	49	47,5	57,5	62	69	84
KH	8	8	10	10	10	20	20	25	25	25
R	15	15	18	18	18	30	30	35	35	35

PROT

PROT. - Coperchio di protezione

PROT. - Protection cover

PROT - Schultzvorrichtungdeckel

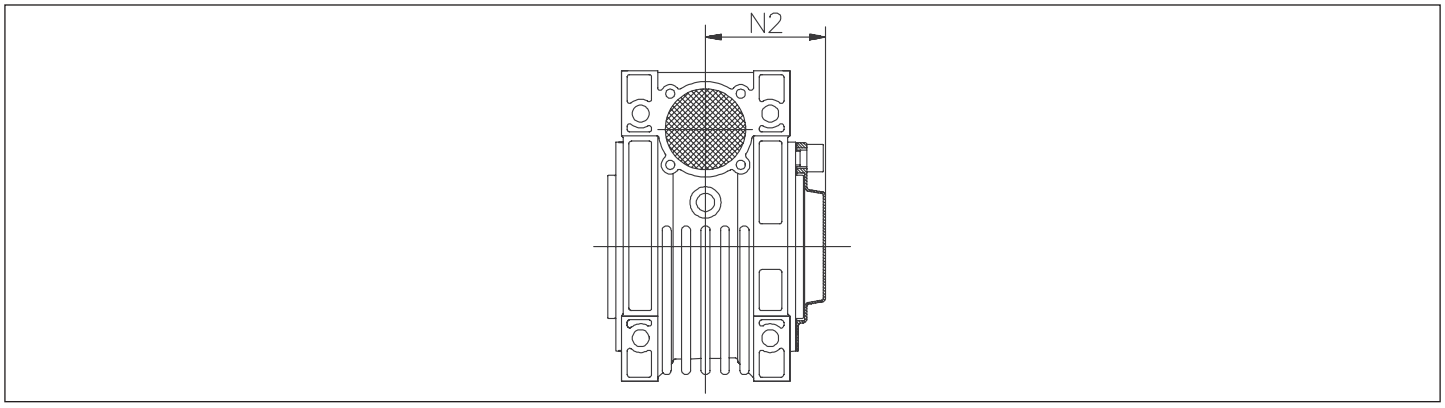

WI - WMI	30	40	50	63	75	90	110	130	150
N2	42	50	57,5	68,5	73,5	85,5	94	102	117

1.10 Linguette

1.10 Keys

1.10 Paßfedern

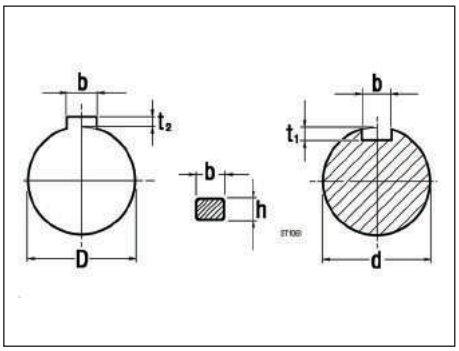

Albero entrata
Input shaft
Antriebswelle

d	b x h	t_1	
9	3 x 3	1.8	
11	4 x 4	2.5	
14	5 x 5	3.0	+ 0.1 0
18	6 x 6	3.5	
19	6 x 6	3.5	
24	8 x 7	4.0	
28	8 x 7	4.0	
30	8 x 7	4.0	
35	10 x 8	5.0	
38	10 x 8	5.0	+ 0.2 0
42	12 x 8	5.0	
48	14 x 9	5.5	
55	16 x 10	6.0	
65	18 x 11	7.0	

Albero uscita
Output shaft
Abtriebswelle

D	b x h	t_2	
11	4 x 4	1.8	
14	5 x 5	2.3	
18	6 x 6	2.8	+ 0.1 0
19	6 x 6	2.8	
24	8 x 7	3.3	
25	8 x 7	3.3	
28	8 x 7	3.3	
30	8 x 7	3.3	
32	10 x 8	3.3	
35	10 x 8	3.3	
40	10 x 8	3.3	
42	12 x 8	3.3	
48	14 x 9	3.8	
50	14 x 9	3.8	+ 0.2 0
55	16 x 10	4.3	
60	18 x 11	4.3	
65	18 x 11	4.4	
70	20 x 12	4.9	
80	22 x 14	5.4	
90	25 x 14	5.4	
100	28 x 16	6.4	
110	28 x 16	6.4	

1.0 RINVII ANGOLARI Z
1.0 RIGHT ANGLE Z
1.0 WINKELGETRIEBE Z

Z

1.1	Caratteristiche tecniche	*Technical characteristics*	Technische Eigenschaften	E1
1.2	Designazione	*Designation*	Bezeichnungen	E2
1.3	Versioni	*Versions*	Ausführungen	E2
1.4	Lubrificazione	*Lubrication*	Schmierung	E5
1.5	Carichi radiali e assiali	*Axial and overhung loads*	Radiale und Axiale Belastungen	E6
1.6	Coppia massima trasmissibile per accoppiamenti in serie	*Maximum torque to be transmittable through in sequence connections*	Das hoeste drehmoment erlaubt durch Serien - verbindungen	E7
1.7	Prestazioni rinvii angolari	*Gearmotors performances*	Leistungen der Getriebe	E8
1.8	Dimensioni	*Dimensions*	Abmessungen	E12
1.9	Accessori	*Accessories*	Zubehör	E34

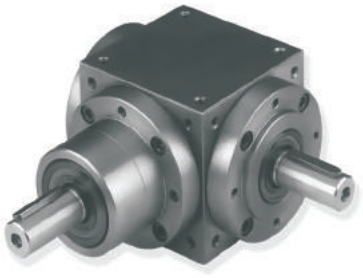

1.1 Caratteristiche tecniche

Il prodotto si distingue per il favorevole rapporto potenza/ingombro e per la possibilità di funzionamento silenzioso e regolare anche a velocità elevate.
Carcassa monoblocco in ghisa lavorata su tutte le facce, ingranaggi Gleason e cuscinetti largamente dimensionati.
Il disegno modulare dei ns rinvii angolari Z permette di equipaggiare il gruppo con alberi supplementari, fino ad un massimo di 6 (tranne che per il rapporto 1/1).
Tutte queste caratteristiche rendono il ns prodotto ai vertici della categoria.

1.1 Technical characteristics

Our right angle gears make the difference for the favourable relation between power/dimension and for the possibility of a silent and regular functioning also at high speed.
One body piece in cast iron with all the external faces machined, the gears are Gleason and the bearings are overrated as well.
The modular construction of our Z right angle gears permits us to mount up to six input/output shafts (except ratio 1/1).
All these features place our products on top of this sector

1.1 Technische Eigenschaften

Unsere Winkelgetriebe zeichnen sich durch das positive Verhältnis von Leistung und Platzbedarf und durch einen ruhigen und reibungslosen Betrieb selbst bei hohen Geschwindigkeiten aus.
Monoblockgehäuse mit allseitig bearbeiteten Außenflächen, großzügig dimensionierten Gleason-Zahnrädern und Lagern.
Der modulare Aufbau erlaubt die Montage von bis zu sechs Wellen (Ausnahme ist das Verhältnis 1/1).
Diese Eigenschaften machen dieses Produkt zu einem der führenden am Markt.

E

1.2 Designazione

1.2 Designation

1.2 Bezeichnung

	Grandezza *Size* Größe	Versione *Versions* Ausführung	ir	IEC (B5)	Flangia uscita *Output flange* Abtriebsflansch	Entrata supplementare *Additional input* Zusatzantrieb
Z	**12 19 24 32 38 42 55 75**	A-AS-AD-AP C-DR-B-BS BD-AH-BH **AX-DX***	1-1.5-2-3-4-5		FC 1 FC 2 FC 3 FP 1 FP 2 FP 3	A 90-A 180-A 270 AS 90-AS 180-AS 270 AD 90-AD 180-AD 270 C 90 DR 90 AH 90-AH 180-AH 270 **(non applicabili con ir =1)**
		MA-MAS-MAD MC-MDR-MB MBS-MBD MAH-MBH	1-1.5-2-3-4-5	63 160		

* Versione moltiplicatore / *Multiplier version* / Ausführung übersetzungsgetriebe

Esempio / *Example* / Beispiel

Z19 A 1.5 FC 1 A 90

Z19 MA 1.5 PAM 80 FC 1

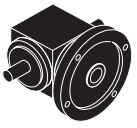

Altre specifiche:

Posizione della morsettiera del motore se diversa da quella standard (1).
Posizione di montaggio con indicazione tappi di livello e carico; se non specificato si considera standard la posizione M1.

Further specifications:

Terminal board box position if different from standard (1).
Mounting position. Indications must be given regarding level and breather plugs. If not specified positions, M1 is considered standard.

Weitere Spezifikationen:

Stellung des Klemmenkastens des Motors, falls diese von der Standard-Ausführung abweicht (1).
Montagestellung mit Angabe der Ölpegel und Entlüfterstöpsel. Falls nichts anderes angegeben wird, gilt die Pos. M1 als Standard.

1.3 Versioni

1.3 Versions

1.3 Ausführung

Grandezze / *Sizes* /Größe: **12-19-24-32-38-42-55-75, i = 1-1.5-2-3-4-5**

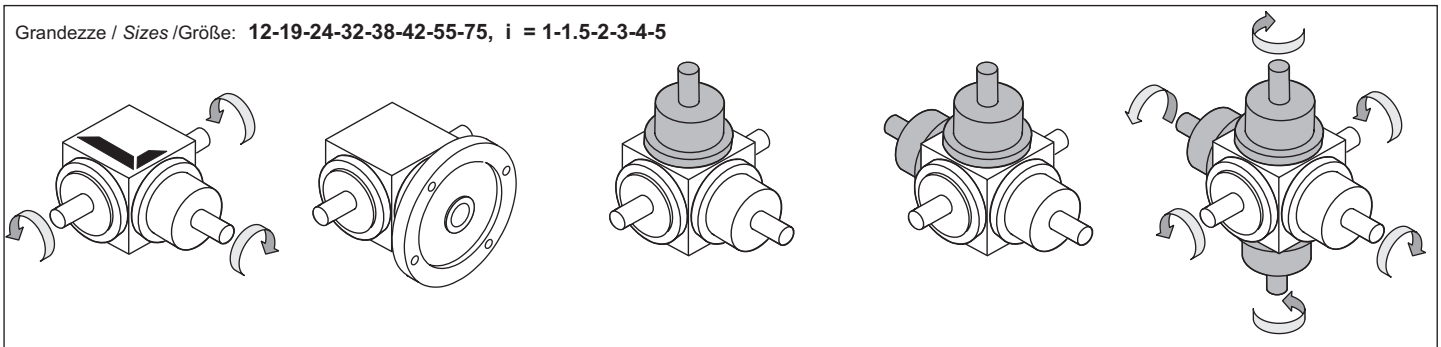

A **MA** **A90** **A180** **A270**

Grandezze / *Sizes* /Größe: **12-19-24-32-38-42-55-75, i = 1-1.5-2-3-4-5**

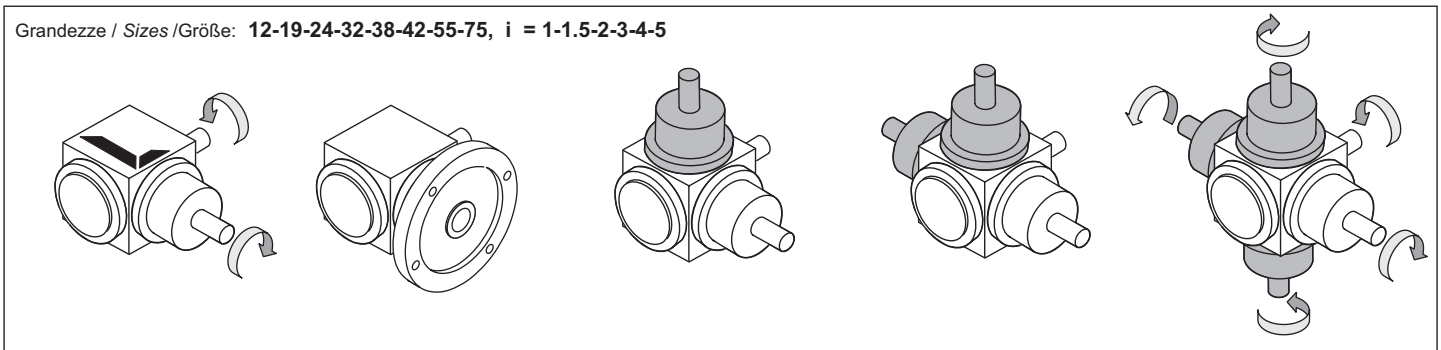

AS **MAS** **AS90** **AS180** **AS270**

1.3 Versioni *1.3 Versions* 1.3 Ausführung

Grandezze / *Sizes* /Größe: **12-19-24-32-38-42-55-75, i = 1-1.5-2-3-4-5**

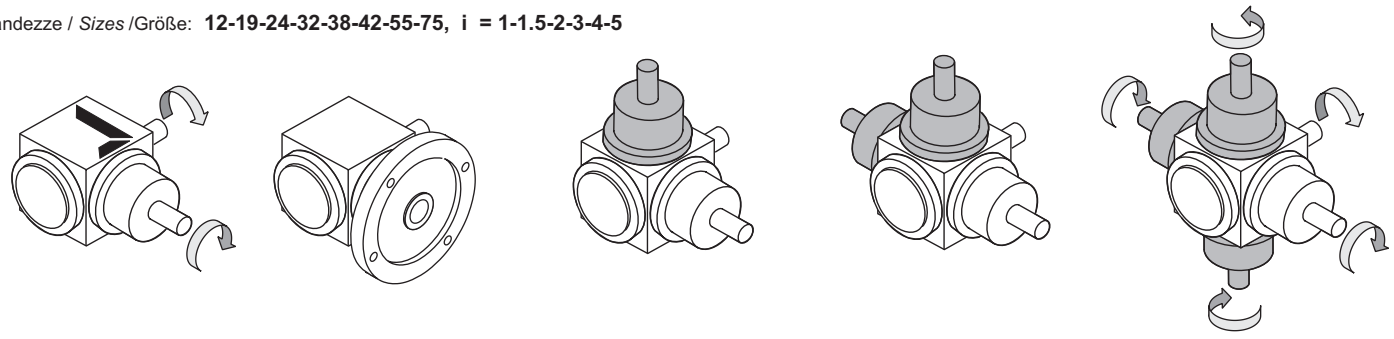

AD **MAD** **AD90** **AD180** **AD270**

Grandezze / *Sizes* /Größe: **19-24-32-38-42-55-75, i = 1.5-2**

Versione moltiplicatore / *Multiplier version* / Ausführung übersetzungsgetriebe

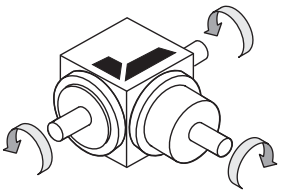

AX

Grandezze / *Sizes* /Größe: **12-19-24-32-38-42-55-75, i = 1-1.5-2-3-4-5**

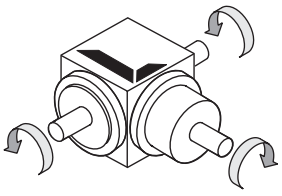

AP

Grandezze / *Sizes* /Größe: **12-19-24-32-38-42-55-75, i = 1-1.5-2-3-4-5**

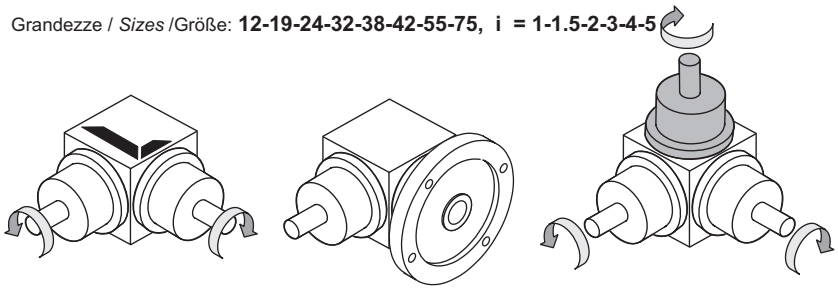

C **MC** **C90**

Grandezze / *Sizes* /Größe: **12-19-24-32-38-42-55-75, i = 1-1.5-2-3-4-5**

Due Alberi Uscita / *Two Shafts Ouput* / Zwei Abtriebswelle

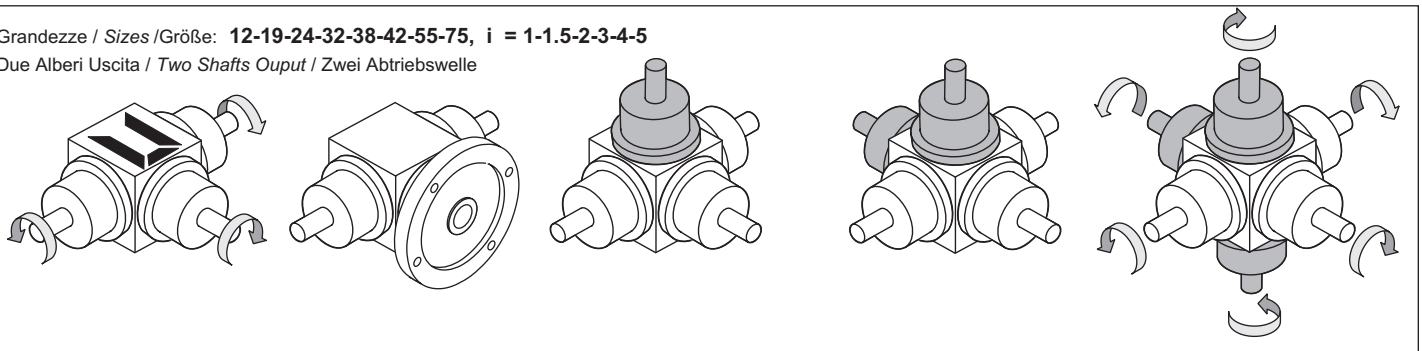

DR **MDR** **DR90** **DR180** **DR270**

E

1.3 Versioni

1.3 Versions

1.3 Ausführung

Grandezze / *Sizes* /Größe: **12-19-24-32-38-42-55-75, i = 1-1.5-2-3-4-5**
Due Alberi Uscita / *Two Shafts Ouput* / Zwei Abtriebswelle
Versione moltiplicatore / *Multiplier version* / Ausführung übersetzungsgetriebe

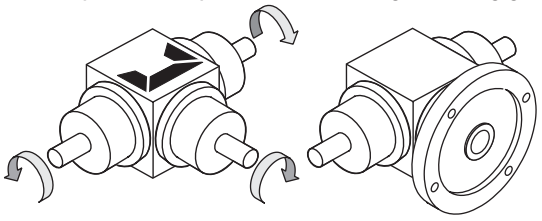

DX **MDX**

Grandezze / *Sizes* /Größe: **12-19-24-32-38-42-55-75 i = 1-1.5-2-3-4-5**
Due Alberi Entrata / *Two Shafts Input* / Zwei Antriebswelle

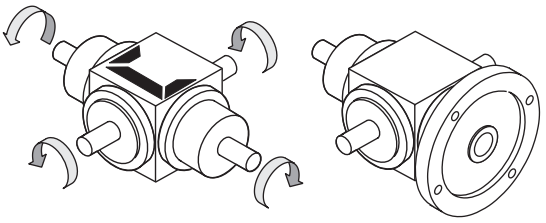

B **MB**

Grandezze / *Sizes* /Größe: **12-19-24-32-38-42-55-75, i = 1-1.5-2-3-4-5**
Due Alberi Entrata / *Two Shafts Input* / Zwei Antriebswelle

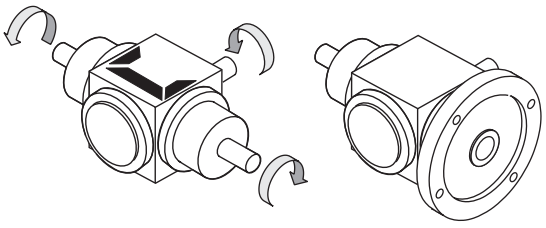

BS **MBS**

Grandezze / *Sizes* /Größe: **12-19-24-32-38-42-55-75, i = 1-1.5-2-3-4-5**
Due Alberi Entrata / *Two Shafts Input* / Zwei Antriebswelle

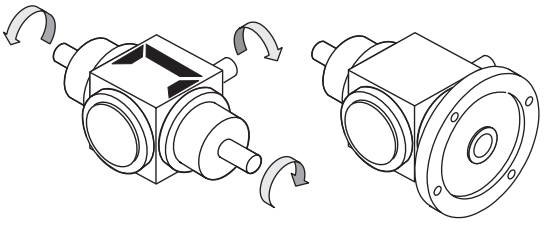

BD **MBD**

Grandezze / *Sizes* /Größe: **12-19-24-32-38-42-55-75, i = 1-1.5-2-3-4-5**

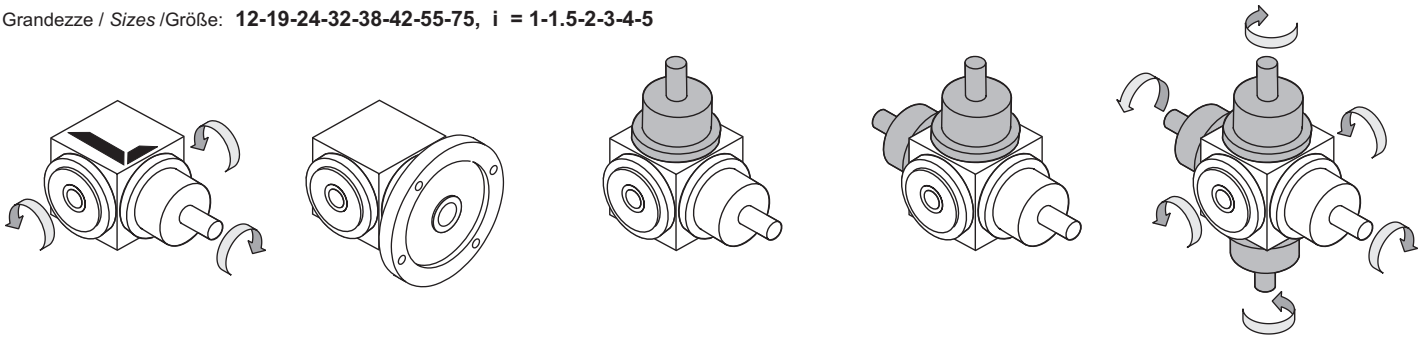

AH **MAH** **AH90** **AH180** **AH270**

Grandezze / *Sizes* /Größe: **12- 19-24-32-38-42-55-75, i = 1-1.5-2-3-4-5**
Due Alberi Entrata / *Two Shafts Input* / Zwei Antriebswelle

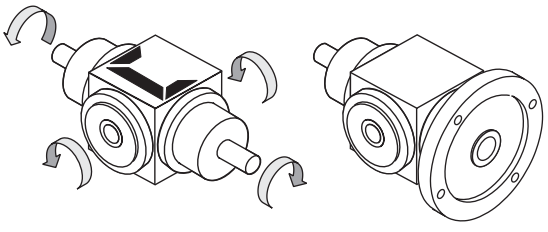

BH **MBH**

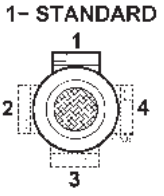

Posizione morsettiera
Terminal board position
Lage des Klemmenkastens

1.4 Lubrificazione

1.4 Lubrication

1.4 Schmierung

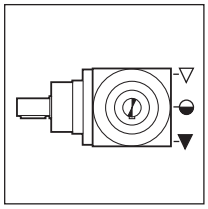

M1

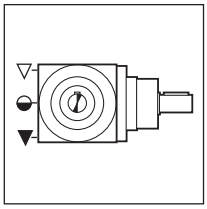

M2

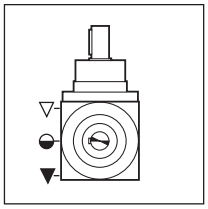

M3

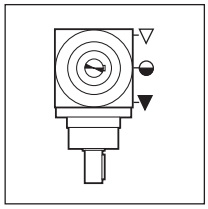

M4

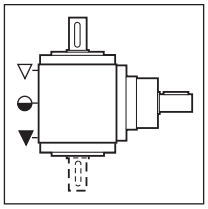

M6

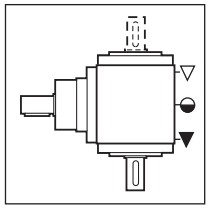

M5

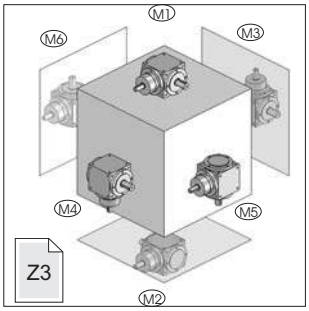

▽ Carico / *Breather plug* / Nachfüllen - Entlüftung
◒ Livello / *Level plug* / Pegel
▼ Scarico / *Drain plug* / Auslauf

ZA Quantità di lubrificante - Lubricant Quantity - Schmiermittelmenge - [Kg]							
12	**19**	**24**	**32**	**38**	**42**	**55**	**75**
0.1	0.15	0.22	0.60	1.1	2.2	3.6	9.0

Solo per ZA.
Per Ulteriori informazioni Contattare il ns. servizio tecnico

Nota: Se in fase d'ordine la posizione di montaggio è omessa, il riduttore verrà fornito con i tappi predisposti per la posizione M1.

Eventuali forniture con predisposizioni tappi diverse da quella indicata in tabella, dovranno essere concordate.

Only ZA.
Contact our technical dept

Note: If the mounting position is not specified in the order, the worm gearbox supplied will have plugs pre-arranged for position M1.

The supply of gearboxes with different plug pre-arrangements has to be agreed with the manufacturer.

Gültig nur für ZA.
Wenden Sie sich an unseren technischen Service

Anmerkung:Sollte in der Auftragsphase die Einbaulage nicht angegeben werden, wird das Getriebe mit Stopfen für die Einbaulage M1.

Lieferungen, die eine Auslegung hinsichtlich der Stopfen aufweisen, die von den Angaben in der Tabelle abweichen, müssen vorab vereinbart werden..

E

1.5 Carichi radiali e assiali

Le trasmissioni effettuate tramite pignoni per catena, ruote dentate o pulegge generano delle forze radiali (Fr) sugli alberi dei riduttori.
I valori dei carichi radiali e assiali generati dall'applicazione debbono essere sempre minori o uguali a quelli ammissibili indicati nelle tabelle.

1.5 *Radial and axial loads*

Transmissions implemented by means of chain pinions, gears or pulleys generate radial forces (Fr) on the gear unit shafts.
The value of the radial and axial loads generated by the application must always be less than or equal to admissible values as *indicated in the chart.*

1.5 Radial und axial Belastungen (N)

Antriebe mit Kettenrädern, Zahnrädern oder Riemenscheiben erzeugen radiale Kräfte (Fr) an den Wellen der Untersetzungsgetriebe. Die Werte der Quer- und Längsbelastungen, die durch die Anwendungen hervorgerufen werden, dürfen nicht über den den in den Tabellen angegebenen zulässigen Werten liegen.

Carichi radiali

Radial loads

Radial Belastungen

Tab. 4.2

i	F_{r1} [N]							
	Z.							
	12	19	24	32	38	42	55	75
1-2-3	550	850	1400	2000	4000	6000	10000	25000
4-5	—	600	850	1400	2000	4000	6000	10000
i	F_{r2} [N]							
	Z.							
	12	19	24	32	38	42	55	75
Tutti /*All* Alle	900	1500	2200	3500	7000	10000	15000	35000

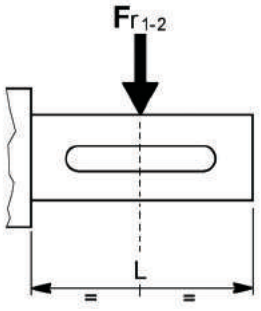

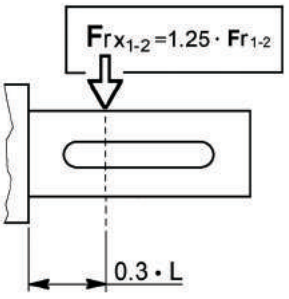

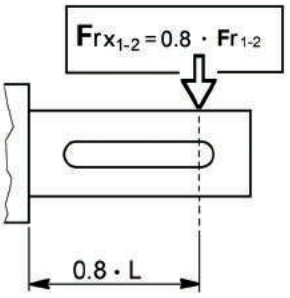

I carichi radiali indicati nelle tabelle si intendono applicati a metà della sporgenza dell'albero standard e sono riferiti ai riduttori operanti con fattore di servizio 1.
Per i carichi non agenti sulla mezzeria dell'albero lento o veloce si ha:

a 0.3 della sporgenza:
$F_{rx} = 1.25 \times F_{r1-2}$
a 0.8 dalla sporgenza:
$F_{rx} = 0.8 \times F_{r1-2}$

The radial loads shown in the tables are applied on the centre line of the standard shaft extension and are related to gearboxes working with service factor 1.
For loads which are not applied on the centre line of the output or input shaft, following values will be obtained:

at 0.3 from extension:
$F_{rx} = 1.25 \times F_{r1-2}$
at 0.8 from extension:
$F_{rx} = 0.8 \times F_{r1-2}$

Bei den in der Tabelle angegebenen Radialbelastungen wird eine Krafteinwirkung auf die Mitte des Wellenendes zugrunde gelegt; außerdem arbeiten die Getriebe mit Betriebsfaktor 1.
Bei Lasten, die nicht auf die Mitte der Ab- und Antriebswellen wirken, legt man folgende Werte zugrunde:

0.3 vom Wellenabsatz entfernt:
$F_{rx} = 1.25 \times F_{r1-2}$
0.8 vom Wellenabsatz entfernt:
$F_{rx} = 0.8 \times F_{r1-2}$

Carichi assiali

Axial loads

Axial Belastungen

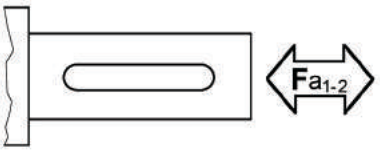

Carichi assiali — *Axial loads* — Axial Belastungen

Tab. 4.3

i	F_{a1} [N]							
	Z.							
	12	19	24	32	38	42	55	75
	Cuscinetti a sfere (escluso versione AP)							
1-2-3	300	450	700	1100	1700	2700	5000	10000
4-5	—	400	450	700	1100	1700	2700	5000
	Cuscinetti a rulli conici (solo versione AP)							
1-2-3	—	650	1000	1500	2400	4000	7800	16000
4-5	—	450	650	1000	1500	2400	4000	7800

i	F_{a2} [N]							
	Z.							
	12	19	24	32	38	42	55	75
	Cuscinetti a sfere (escluso versione AP)							
Tutti /*All* Alle	500	700	1300	1700	3400	4800	6800	15000
	Cuscinetti a rulli conici (solo versione AP)							
Tutti /*All* Alle	—	1000	1800	2500	5000	7000	10000	22000

1.6 Coppia massima trasmissibile per accoppiamenti in serie

Quando più rinvii angolari, di forma A oppure AH, vengono montati in serie occorre sempre verificare che la coppia massima necessaria sia compatibile con quella indicata in tabella.

1.6 Maximum torque to be transmittable through in sequence connections

When many A and AH right angle gearboxes are mounted in sequence it is necessary to verify the compatibility between the maximum needed couple and those indicated in the following chart.

1.6 Das hoeste drehmoment erlaubt durch Serien - verbindungen

Wenn mehrere Winkelgetrieben A order AH typ, in Serie verdunden sind, muss man pruefen, dass hoechste gebrauchte Drehmoment mit dem in folgender Tabelle.

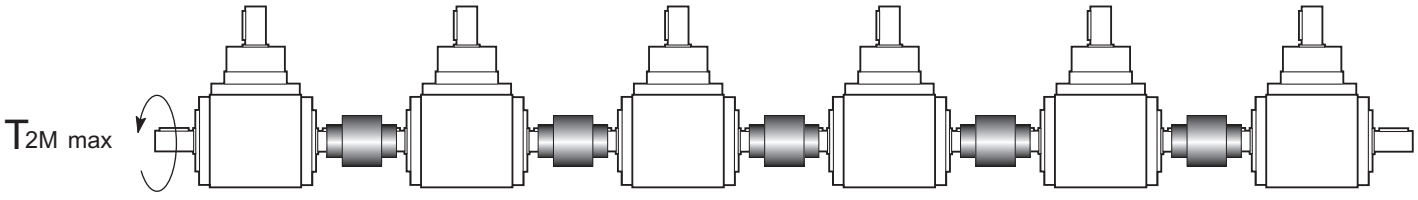

Tab. 4.4

	Z.						
	19 A 19 AH	24 A 24 AH	32 A 32 AH	38 A 38 AH	42 A 42 AH	55 A 55 AH	75 A 75 AH
T_{2M} max (Nm)	60	120	300	500	700	1600	4000

Se invece le condizioni di lavoro sono superiori a quelle sopra indicate occorre utilizzare rinvii angolari di forma AP con albero passante di dimensioni maggiori, le cui coppie massime sono:

On the other hand, if the working conditions are more severe than those above mentioned you will have to use AP right angle gear boxes with connection shaft bigger than the above mentioned.
The transmittable highest torque are:

Falls dass die Arbeitsbedingungen schwerer als die o.g. sind, muss man AP Winkelgetrieben (mit groesseren Verbin dungswellen) benutzen. Hier folgt die Tabelle mit en Hoechsten Drehmomenten.

Tab. 4.5

	Z.						
	19 AP	24 AP	32 AP	38 AP	42 AP	55 AP	75 AP
T_{2M} max (Nm)	120	300	500	700	1000	3000	6500

1.7 Prestazioni rinvii angolari Z — *1.7 Z gearboxes performances* — 1.7 Leistungen der Z-Getriebe

Z 12 (A-AS-AD-AP-C-DR-B-BD-BS)

Kg 2.5

ir	n_1 = 2800 min^{-1}				n_1 = 1400 min^{-1}				n_1 = 900 min^{-1}				n_1 = 500 min^{-1}				IEC
	n_2 min^{-1}	T_{2M} Nm	P kW	RD %	n_2 min^{-1}	T_{2M} Nm	P kW	RD %	n_2 min^{-1}	T_{2M} Nm	P kW	RD %	n_2 min^{-1}	T_{2M} Nm	P kW	RD %	
1	2800	13.1	4.0	95	1400	14.9	2.3	95	900	16.2	1.6	95	500	18.7	1.0	95	71 (B14) 63 (B5)
1.5	—	—	—	—	—	—	—	—	—	—	—	—	—	—	—	—	
2	1400	13.7	2.1	95	700	14.9	1.1	95	450	16.2	0.80	95	250	18.7	0.52	95	
3	933	7.5	0.77	95	467	8.9	0.46	95	300	9.7	0.32	95	167	11.1	0.20	95	
4	—	—	—	—	—	—	—	—	—	—	—	—	—	—	—	—	—
5	—	—	—	—	—	—	—	—	—	—	—	—	—	—	—	—	

Z 12 (DX) Versione moltiplicatore / *Multiplier version* / Ausführung übersetzungsgetriebe

Kg 2.5

ir	n_1 = 1400 min^{-1}				n_1 = 900 min^{-1}				n_1 = 500 min^{-1}				IEC
	n_2 min^{-1}	T_{2M} Nm	P kW	RD %	n_2 min^{-1}	T_{2M} Nm	P kW	RD %	n_2 min^{-1}	T_{2M} Nm	P kW	RD %	
1.5	—	—	—	—	—	—	—	—	—	—	—	—	—
2	2800	7.5	2.3	95	1800	8.1	1.6	95	1000	9.4	1.0	95	

Z 19 (A-AS-AD-AP-C-DR-B-BD-BS-AH-BH)

Kg 6.0

ir	n_1 = 2800 min^{-1}				n_1 = 1400 min^{-1}				n_1 = 900 min^{-1}				n_1 = 500 min^{-1}				IEC
	n_2 min^{-1}	T_{2M} Nm	P kW	RD %	n_2 min^{-1}	T_{2M} Nm	P kW	RD %	n_2 min^{-1}	T_{2M} Nm	P kW	RD %	n_2 min^{-1}	T_{2M} Nm	P kW	RD %	
1	2800	69	21	95	1400	73	11.3	95	900	75	7.4	95	500	76	4.2	95	71 (B5) 63 (B5)
1.5	1867	47	9.7	95	933	49	5.0	95	600	50	3.3	95	333	51	1.9	95	
2	1400	55	8.5	95	700	57	4.4	95	450	59	2.9	95	250	60	1.7	95	
3	933	31	3.2	95	467	32	1.6	95	300	32	1.1	95	167	33	0.61	95	
4	700	35	2.7	95	350	28	1.1	95	225	28	0.7	95	125	29	0.40	95	
5	560	28	1.7	95	280	29	0.90	95	180	29	0.6	95	100	30	0.33	95	

Z 19 (AX-DX) Versione moltiplicatore / *Multiplier version* / Ausführung übersetzungsgetriebe

Kg 6.0

ir	n_1 = 1400 min^{-1}				n_1 = 900 min^{-1}				n_1 = 500 min^{-1}				IEC
	n_2 min^{-1}	T_{2M} Nm	P kW	RD %	n_2 min^{-1}	T_{2M} Nm	P kW	RD %	n_2 min^{-1}	T_{2M} Nm	P kW	RD %	
1.5	2100	25	5.7	95	1350	25	3.7	95	750	26	2.1	95	—
2	2800	29	8.8	95	1800	30	5.9	95	1000	30	3.3	95	

Z 24 (A-AS-AD-AP-C-DR-B-BD-BS-AH-BH)

Kg 12.0

ir	n_1 = 2800 min^{-1}				n_1 = 1400 min^{-1}				n_1 = 900 min^{-1}				n_1 = 500 min^{-1}				IEC
	n_2 min^{-1}	T_{2M} Nm	P kW	RD %	n_2 min^{-1}	T_{2M} Nm	P kW	RD %	n_2 min^{-1}	T_{2M} Nm	P kW	RD %	n_2 min^{-1}	T_{2M} Nm	P kW	RD %	
1	2800	76	23	95	1400	82	12.7	95	900	86	8.5	95	500	90	4.9	95	90 (B5) 80 (B5) 71 (B5)
1.5	1867	78	16.0	95	933	81	8.3	95	600	83	5.5	95	333	85	3.1	95	
2	1400	69	10.7	95	700	72	5.6	95	450	74	3.6	95	250	75	2.1	95	
3	933	45	4.6	95	467	47	2.4	95	300	48	1.6	95	167	49	0.89	95	
4	700	66	5.1	95	350	69	2.6	95	225	70	1.7	95	125	71	1.0	95	80 (B5) 71 (B5)
5	560	57	3.5	95	280	61	1.9	95	180	62	1.2	95	100	64	0.71	95	

Z 24 (AX-DX) Versione moltiplicatore / *Multiplier version* / Ausführung übersetzungsgetriebe

Kg 12.0

ir	n_1 = 1400 min^{-1}				n_1 = 900 min^{-1}				n_1 = 500 min^{-1}				IEC
	n_2 min^{-1}	T_{2M} Nm	P kW	RD %	n_2 min^{-1}	T_{2M} Nm	P kW	RD %	n_2 min^{-1}	T_{2M} Nm	P kW	RD %	
1.5	2100	40	9.4	95	1350	42	6.2	95	750	43	3.5	95	—
2	2800	36	11.2	95	1800	37	7.3	95	1000	38	4.1	95	

1.7 Prestazioni rinvii angolari Z — *1.7 Z gearboxes performances* — 1.7 Leistungen der Z-Getriebe

Z 32 (A-AS-AD-AP-C-DR-B-BD-BS-AH-BH) — Kg 22

ir	n_1 = 2800 min^{-1}				n_1 = 1400 min^{-1}				n_1 = 900 min^{-1}				n_1 = 500 min^{-1}				IEC
	n_2 min^{-1}	T_{2M} Nm	P kW	RD %	n_2 min^{-1}	T_{2M} Nm	P kW	RD %	n_2 min^{-1}	T_{2M} Nm	P kW	RD %	n_2 min^{-1}	T_{2M} Nm	P kW	RD %	
1	2800	173	54	95	1400	187	29	95	900	195	19.3	95	500	203	11.2	95	112 (B5) 100 (B5) 90 (B5) 80 (B5)
1.5	1867	150	31	95	933	163	16.7	95	600	159	10.5	95	333	178	6.5	95	
2	1400	132	20	95	700	140	10.8	95	450	142	7.1	95	250	147	4.1	95	
3	933	94	9.6	95	467	105	5.4	95	300	107	3.5	95	167	111	2.0	95	
4	700	92	7.1	95	350	100	3.9	95	225	101	2.5	95	125	104	1.4	95	90 (B5) 80 (B5)
5	560	75	4.6	95	280	80	2.5	95	180	81	1.6	95	100	84	0.93	95	

Z 32 (AX-DX) Versione moltiplicatore / *Multiplier version* / Ausführung übersetzungsgetriebe — Kg 22

ir	n_1 = 1400 min^{-1}				n_1 = 900 min^{-1}				n_1 = 500 min^{-1}				IEC
	n_2 min^{-1}	T_{2M} Nm	P kW	RD %	n_2 min^{-1}	T_{2M} Nm	P kW	RD %	n_2 min^{-1}	T_{2M} Nm	P kW	RD %	
1.5	2100	81	18.8	95	1350	80	11.9	95	750	89	7.3	95	—
2	2800	70	22	95	1800	71	14.1	95	1000	74	8.1	95	

Z 38 (A-AS-AD-AP-C-DR-B-BD-BS-AH-BH) — Kg 37

ir	n_1 = 2800 min^{-1}				n_1 = 1400 min^{-1}				n_1 = 900 min^{-1}				n_1 = 500 min^{-1}				IEC
	n_2 min^{-1}	T_{2M} Nm	P kW	RD %	n_2 min^{-1}	T_{2M} Nm	P kW	RD %	n_2 min^{-1}	T_{2M} Nm	P kW	RD %	n_2 min^{-1}	T_{2M} Nm	P kW	RD %	
1	2800	371	115	95	1400	393	61	95	900	403	40	95	500	420	23	95	132 (B5) 112 (B5) 100 (B5) 90 (B5)
1.5	1867	356	73	95	933	374	39	95	600	382	25	95	333	397	14.6	95	
2	1400	255	39	95	700	268	21	95	450	476	13.7	95	250	283	7.8	95	
3	933	192	19.8	95	467	200	10.3	95	300	205	6.8	95	167	211	3.9	95	
4	700	209	16.1	95	350	217	8.4	95	225	221	5.5	95	125	226	3.1	95	112/100 (B5) 90 (B5)
5	560	211	13.0	95	280	219	6.8	95	180	222	4.4	95	100	228	2.5	95	

Z 38 (AX-DX) Versione moltiplicatore / *Multiplier version* / Ausführung übersetzungsgetriebe — Kg 37

ir	n_1 = 1400 min^{-1}				n_1 = 900 min^{-1}				n_1 = 500 min^{-1}				IEC
	n_2 min^{-1}	T_{2M} Nm	P kW	RD %	n_2 min^{-1}	T_{2M} Nm	P kW	RD %	n_2 min^{-1}	T_{2M} Nm	P kW	RD %	
1.5	2100	187	43	95	1350	191	28	95	750	198	16.4	95	—
2	2800	134	41	95	1800	138	27	95	1000	142	15.6	95	

E

Z 42 (A-AS-AD-AP-C-DR-B-BD-BS-AH-BH) — Kg 57

ir	n_1 = 2800 min^{-1}				n_1 = 1400 min^{-1}				n_1 = 900 min^{-1}				n_1 = 500 min^{-1}				IEC
	n_2 min^{-1}	T_{2M} Nm	P kW	RD %	n_2 min^{-1}	T_{2M} Nm	P kW	RD %	n_2 min^{-1}	T_{2M} Nm	P kW	RD %	n_2 min^{-1}	T_{2M} Nm	P kW	RD %	
1	2800	437	135	95	1400	461	71	95	900	474	47	95	500	494	27	95	160 (B5) 132 (B5) 112 (B5)
1.5	1867	339	70	95	933	421	43	95	600	434	29	95	333	447	16.4	95	
2	1400	299	46	95	700	316	24	95	450	324	16.1	95	250	334	9.2	95	
3	933	228	23	95	467	235	12.1	95	300	242	8.0	95	167	248	4.6	95	132/112 (B5)
4	700	234	18.1	95	350	243	9.4	95	225	248	6.2	95	125	254	3.5	95	112 (B5)
5	560	211	13.0	95	280	219	6.8	95	180	2220	4.4	95	100	228	2.5	95	

Z 42 (AX-DX) Versione moltiplicatore / *Multiplier version* / Ausführung übersetzungsgetriebe — Kg 57

ir	n_1 = 1400 min^{-1}				n_1 = 900 min^{-1}				n_1 = 500 min^{-1}				IEC
	n_2 min^{-1}	T_{2M} Nm	P kW	RD %	n_2 min^{-1}	T_{2M} Nm	P kW	RD %	n_2 min^{-1}	T_{2M} Nm	P kW	RD %	
1.5	2100	211	49	95	1350	217	32	95	750	224	18.5	95	—
2	2800	158	49	95	1800	162	32	95	1000	167	18.4	95	

1.7 Prestazioni rinvii angolari Z — *1.7 Z gearboxes performances* — 1.7 Leistungen der Z-Getriebe

Z 55 (A-AS-AD-AP-C-DR-B-BD-BS-AH-BH)

Kg 87

ir	n_1 = 2800 min^{-1}				n_1 = 1400 min^{-1}				n_1 = 900 min^{-1}				n_1 = 500 min^{-1}				IEC
	n_2 min^{-1}	T_{2M} Nm	P kW	RD %	n_2 min^{-1}	T_{2M} Nm	P kW	RD %	n_2 min^{-1}	T_{2M} Nm	P kW	RD %	n_2 min^{-1}	T_{2M} Nm	P kW	RD %	
1	—	—	—	—	1400	992	153	95	900	1023	101	95	500	1053	58	95	160 (B5) 132 (B5) 112 (B5)
1.5	—	—	—	—	933	1057	109	95	600	1086	72	95	333	1123	41	95	
2	—	—	—	—	700	706	54	95	450	729	36	95	250	749	21	95	
3	—	—	—	—	467	481	25	95	300	497	16.4	95	167	508	9.3	95	
4	—	—	—	—	350	621	24	95	225	636	15.8	95	125	651	9.0	95	132 (B5) 112 (B5)
5	—	—	—	—	280	595	18.4	95	180	607	12.0	95	100	621	6.8	95	

Z 55 (AX-DX) Versione moltiplicatore / *Multiplier version* / Ausführung übersetzungsgetriebe

Kg 87

ir	n_1 = 1400 min^{-1}				n_1 = 900 min^{-1}				n_1 = 500 min^{-1}				IEC
	n_2 min^{-1}	T_{2M} Nm	P kW	RD %	n_2 min^{-1}	T_{2M} Nm	P kW	RD %	n_2 min^{-1}	T_{2M} Nm	P kW	RD %	
1.5	2100	529	122	95	1350	543	81	95	750	562	46	95	—
2	2800	353	109	95	1800	365	72	95	1000	375	41	95	

Z 75 (A-AS-AD-AP-C-DR-B-BD-BS-AH-BH)

Kg 255

ir	n_1 = 2800 min^{-1}				n_1 = 1400 min^{-1}				n_1 = 900 min^{-1}				n_1 = 500 min^{-1}				IEC
	n_2 min^{-1}	T_{2M} Nm	P kW	RD %	n_2 min^{-1}	T_{2M} Nm	P kW	RD %	n_2 min^{-1}	T_{2M} Nm	P kW	RD %	n_2 min^{-1}	T_{2M} Nm	P kW	RD %	
1	—	—	—	—	1400	2109	325	95	900	2202	218	95	500	2301	127	95	—
1.5	—	—	—	—	933	1754	180	95	600	1817	120	95	333	1888	69	95	
2	—	—	—	—	700	1723	133	95	450	1778	88	95	250	1841	51	95	
3	—	—	—	—	467	1772	91	95	300	1823	60	95	167	1881	35	95	
4	—	—	—	—	350	1466	57	95	225	1505	37	95	125	1547	21	95	
5	—	—	—	—	280	1278	39	95	180	1309	26	95	100	1342	14.8	95	

Z 75 (AX-DX) Versione moltiplicatore / *Multiplier version* / Ausführung übersetzungsgetriebe

Kg 255

ir	n_1 = 1400 min^{-1}				n_1 = 900 min^{-1}				n_1 = 500 min^{-1}				IEC
	n_2 min^{-1}	T_{2M} Nm	P kW	RD %	n_2 min^{-1}	T_{2M} Nm	P kW	RD %	n_2 min^{-1}	T_{2M} Nm	P kW	RD %	
1.5	2100	877	203	95	1350	909	135	95	750	944	78	95	—
2	2800	862	266	95	1800	889	176	95	1000	921	101	95	

I pesi riportati si riferiscono al modello base versione A, rapporto ir=1.

The following wheights refer to basic model (A version), ratio ir=1.

Die folgenden Gewichte beziehen sich auf das Grundmodell (Version A), Untersetzung ir=1.

Nella tab. 4.6 sono riportate le dimensioni IEC e le possibili combinazioni albero/flangia rinvio angolare predisposto per accoppiamento motore.

In table 4.6 are listed the IEC dimensions as well as the possible shaft/flange combinations of the gearbox to be coupled with a motor.

In Tabelle 4.6 sind sowohl die IEC-Anschlußmaße als auch weitere mögliche Welle/Flansch-Kombinationen zur Motorbefestigung aufgeführt.

Tab. 4.6

Possibili accoppiamenti con motori IEC / *Possible couplings with IEC motors* / Mögliche Verbindungen mit IEC-Motoren

	IEC	ir					
		1	1.5	2	3	4	5
Z 12	71	**14/105** (B14)					
	63	**11/140** (B5)					
Z 19	71	**14/160** (B5)					
	63	**11/140** (B5)					
Z 24	90	**24/200** (B5)					
	80	**19/200** (B5)					
	71	**14/160** (B5)					
Z 32	100/112	**28/250** (B5)					
	90	**24/200** (B5)					
	80	**19/200** (B5)					
Z 38	132	**38/300** (B5)					
	100/112	**28/250** (B5)					
	90	**24/200** (B5)					
Z 42	160	**42/350** (B5)					
	132	**38/300** (B5)					
	100/112	**28/250** (B5)					
Z 55	160	**42/350** (B5)					
	132	**38/300** (B5)					
	100/112	**28/250** (B5)					

Legenda:

11/140 (B5)

11/140 : combinazioni albero/flangia standard
(B5) : forma costruttiva motore IEC

Key:

11/140 *(B5)*

11/140 *: standard shaft/flange combination*
(B5) : IEC motor constructive shape

Legende:

11/140 (B5)

11/140 : Standardkombinationen Welle/Flansch
(B5) : Konstruktionsform IEC-Motor

E

1.8 Dimensioni

1.8 Dimensions

1.8 Abmessungen

Z.A

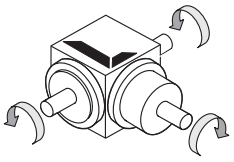

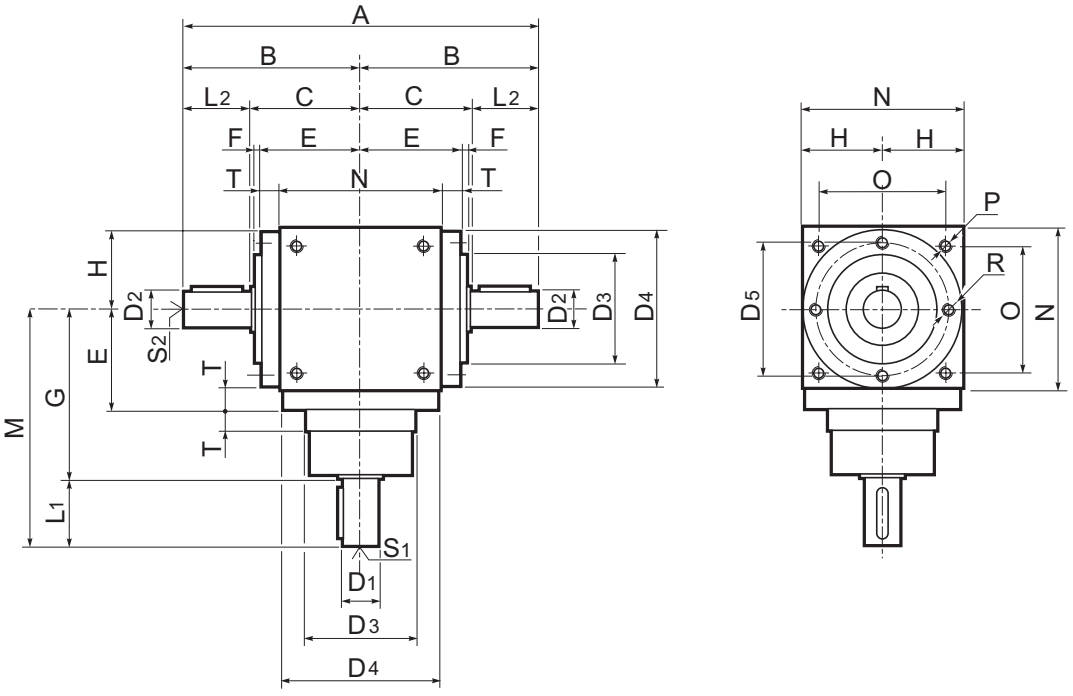

Z.MA

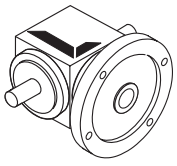

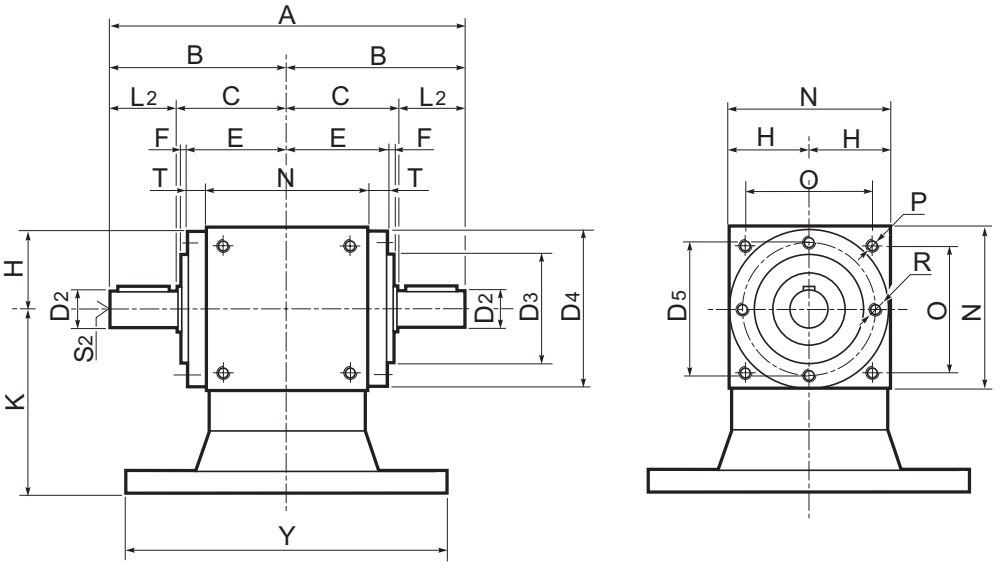

1.8 Dimensioni — *1.8 Dimensions* — 1.8 Abmessungen

Z.A	C	D3 h8	D4	D5	E	F	G	H	N	O	P	R	T
12	46	44	-	54	42	2	74	32.5	65	45	M6	M6	-
19	65	60	86	72	59	4	100	45	90	70	M6	M6	14
24	80	70	105	88	73	5	115	55	110	88	M8	M8	18
32	95	95	135	115	88	5	145	70	140	110	M10	M10	18
38	110	120	165	145	103	5	170	85	170	136	M12	M12	18
42	125	135	190	165	118	5	195	100	200	155	M12	M12	18
55	150	170	230	205	143	5	245	120	240	190	M14	M14	23
75	225	-	300	-	195	-	350	165	330	248	M16	M16	30

Z.A	ir	A	B	M	Albero entrata / *Input shaft* / Antriebswelle			Albero uscita / *Output shaft* / Abtriebswelle		
					D1 j6	L1	S1	D2 j6	L2	S2
12	**1-2-3**	144	72	100	12	26	M4x8	12	26	M4x8
19	**1-2-3**	210	105	140	19	40	M6x12	19	40	M6x12
	4-5			130	14	30	M5x10			
24	**1-2-3**	260	130	165	24	50	M8x16	24	50	M8x16
	4-5			155	19	40	M6x12			
32	**1-2-3**	310	155	205	32	60	M10x20	32	60	M10x20
	4-5			195	24	50	M8x16			
38	**1-2-3**	360	180	240	38	70	M12x24	38	70	M12x24
	4-5			230	28	60	M10x20			
42	**1-2-3**	410	205	275	42	80	M12x24	42	80	M12x24
	4-5			255	32	60	M10x20			
55	**1-2-3**	520	260	355	55	110	M14x28	55	110	M14x28
	4-5			325	42	80	M12x24			
75	**1-2-3**	750	375	500	75	150	M16x32	75	150	M16x32
	4-5			460	55	110	M14x28			

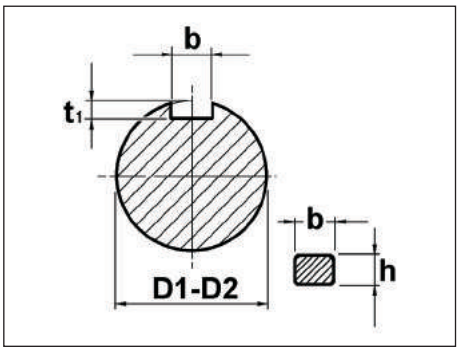

D1 - D2	b x h	t_1	
12	4 x 4	2.5	+ 0.1 0
14	5 x 5	3.0	
19	6 x 6	3.5	
24	8 x 7	4.0	+ 0.2 0
28	8 x 7	4.0	
32	8 x 7	4.0	
38	10 x 8	5.0	
42	12 x 8	5.0	
55	16 x 10	6.0	
75	22 x 14	9.0	

	IEC	12		19		24		32		38		42		55	
		Y	K	Y	K	Y	K	Y	K	Y	K	Y	K	Y	K
Z.MA	**B5**	105 (B14)	90	140	90	160	120	200	140	200	155	250	200	250	220
		140	90	160	90	200	120	250	140	250	155	300	200	300	220
										300	175	350	200	350	220

1.8 Dimensioni *1.8 Dimensions* **1.8 Abmessungen**

Z.AS - Z.AD

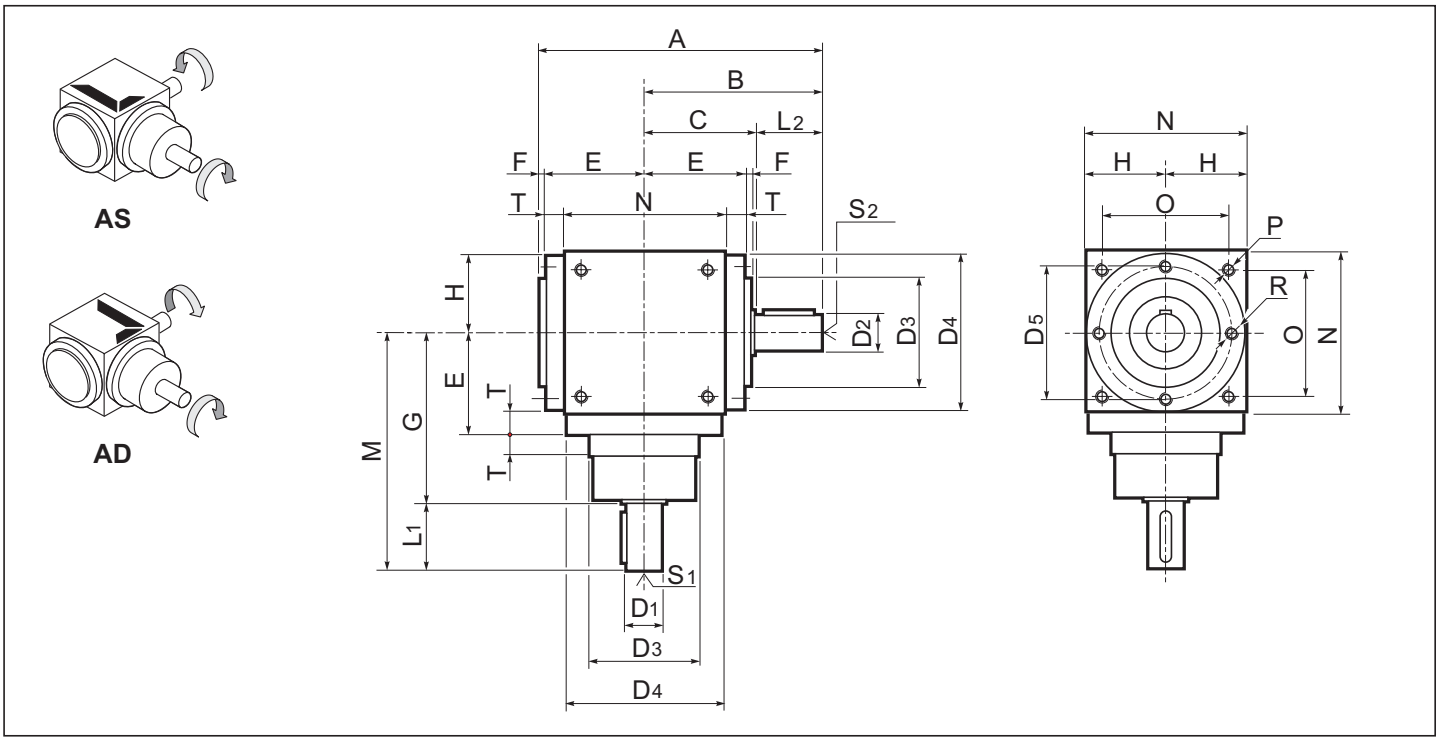

Z.MAS - Z.MAD

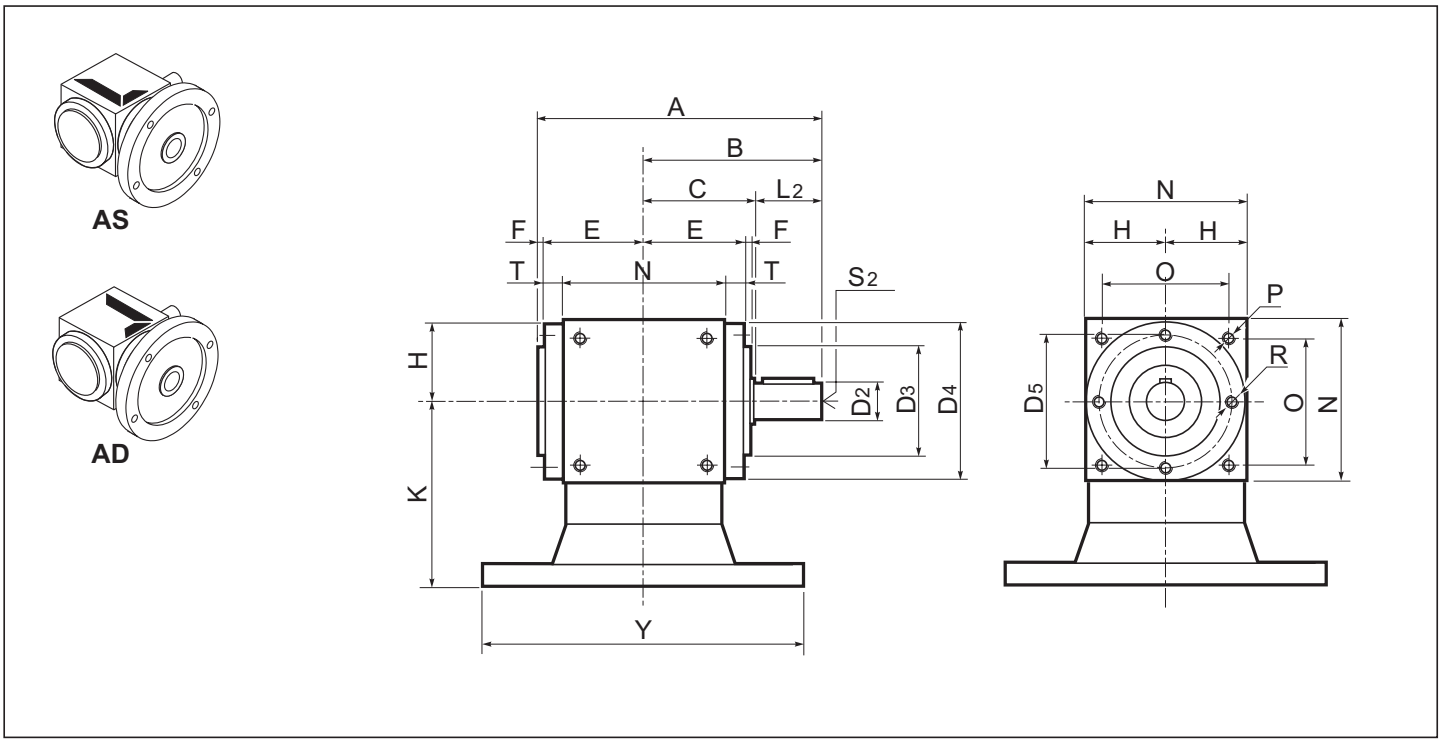

1.8 Dimensioni — *1.8 Dimensions* — 1.8 Abmessungen

Z.AS Z.AD	C	D3 h8	D4	D5	E	F	G	H	N	O	P	R	T
12	46	44	-	54	42	2	74	32.5	65	45	M6	M6	-
19	65	60	86	72	59	4	100	45	90	70	M6	M6	14
24	80	70	105	88	73	5	115	55	110	88	M8	M8	18
32	95	95	135	115	88	5	145	70	140	110	M10	M10	18
38	110	120	165	145	103	5	170	85	170	136	M12	M12	18
42	125	135	190	165	118	5	195	100	200	155	M12	M12	18
55	150	170	230	205	143	5	245	120	240	190	M14	M14	23
75	225	-	300	-	195	-	350	165	330	248	M16	M16	30

Z.AS Z.AD	ir	A	B	M	Albero entrata / *Input shaft* / Antriebswelle			Albero uscita / *Output shaft* / Abtriebswelle		
					D1 j6	L1	S1	D2 j6	L2	S2
12	**1-2-3**	116	72	100	12	26	M4x8	12	26	M4x8
19	**1-2-3**	168	105	140	19	40	M6x12	19	40	M6x12
	4-5			130	14	30	M5x10			
24	**1-2-3**	208	130	165	24	50	M8x16	24	50	M8x16
	4-5			155	19	40	M6x12			
32	**1-2-3**	248	155	205	32	60	M10x20	32	60	M10x20
	4-5			195	24	50	M8x16			
38	**1-2-3**	288	180	240	38	70	M12x24	38	70	M12x24
	4-5			230	28	60	M10x20			
42	**1-2-3**	328	205	275	42	80	M12x24	42	80	M12x24
	4-5			255	32	60	M10x20			
55	**1-2-3**	408	260	355	55	110	M14x28	55	110	M14x28
	4-5			325	42	80	M12x24			
75	**1-2-3**	598	375	500	75	150	M16x32	75	150	M16x32
	4-5			460	55	110	M14x28			

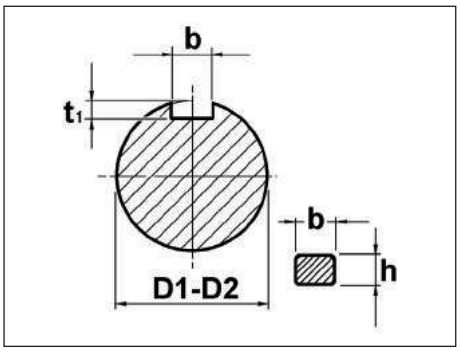

D1 - D2	b x h	t_1	
12	4 x 4	2.5	+ 0.1 0
14	5 x 5	3.0	
19	6 x 6	3.5	
24	8 x 7	4.0	+ 0.2 0
28	8 x 7	4.0	
32	8 x 7	4.0	
38	10 x 8	5.0	
42	12 x 8	5.0	
55	16 x 10	6.0	
75	22 x 14	9.0	

Z.MAS Z.MAD	IEC	12		19		24		32		38		42		55	
		Y	K	Y	K	Y	K	Y	K	Y	K	Y	K	Y	K
	B5	105 (B14)	90	140	90	160	120	200	140	200	155	250	200	250	220
		140	90	160	90	200	120	250	140	250	155	300	200	300	220
										300	175	350	200	350	220

1.8 Dimensioni

1.8 Dimensions

1.8 Abmessungen

Z.AX

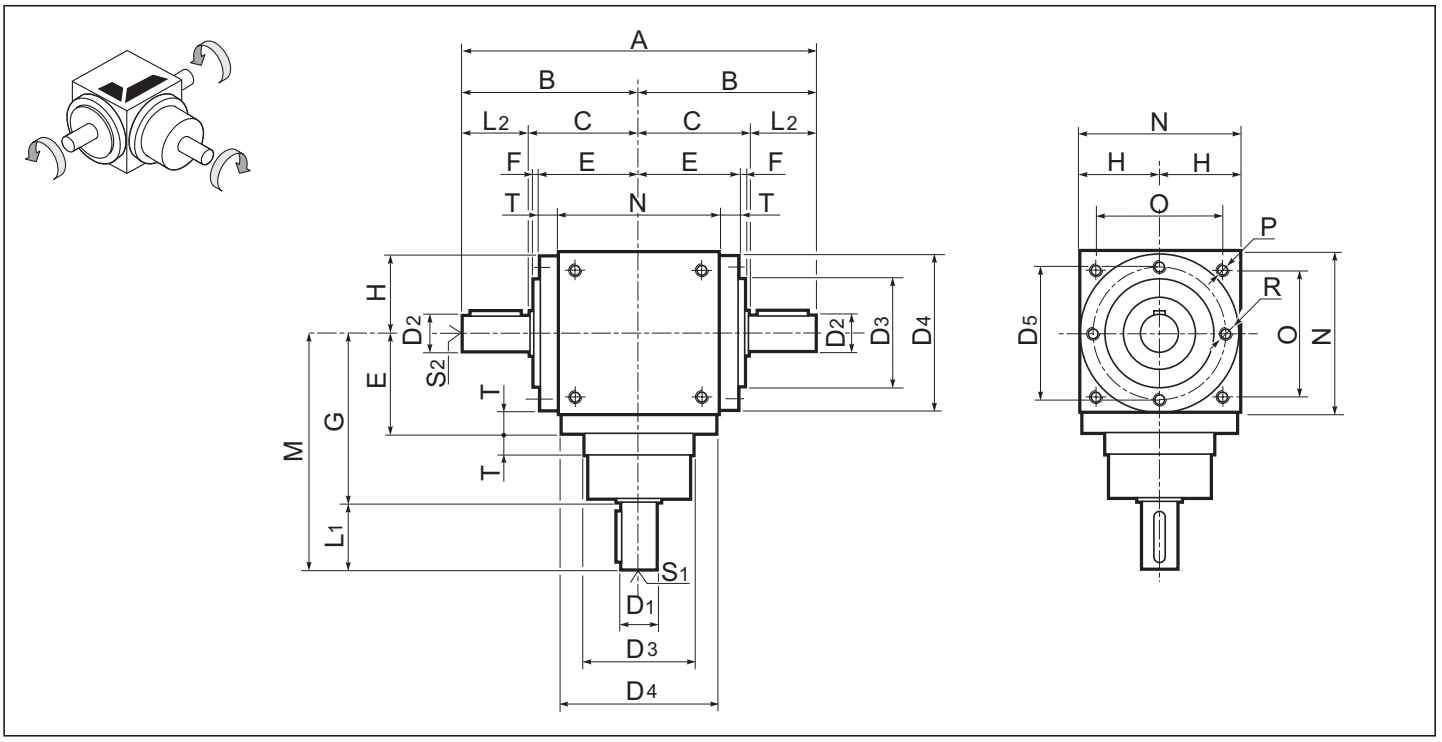

1.8 Dimensioni — *1.8 Dimensions* — 1.8 Abmessungen

Z.AX	C	D3 h8	D4	D5	E	F	G	H	N	O	P	R	T
12	—	—	—	—	—	—	—	—	—	—	—	—	—
19	65	60	86	72	59	4	100	45	90	70	M6	M6	14
24	80	70	105	88	73	5	115	55	110	88	M8	M8	18
32	95	95	135	115	88	5	145	70	140	110	M10	M10	18
38	110	120	165	145	103	5	170	85	170	136	M12	M12	18
42	125	135	190	165	118	5	195	100	200	155	M12	M12	18
55	150	170	230	205	143	5	245	120	240	190	M14	M14	23
75	225	—	300	—	195	—	350	165	330	248	M16	M16	30

Z.AX	ir	A	B	M	Albero entrata / *Input shaft* / Antriebswelle			Albero uscita / *Output shaft* / Abtriebswelle		
					D1 j6	L1	S1	D2 j6	L2	S2
12	—	—	—	—	—	—	—	—	—	—
19	1.5	190	95	140	19	40	M6x12	14	30	M5x10
	2									
24	1.5	240	120	165	24	50	M8x16	19	40	M6x12
	2									
32	1.5	290	145	205	32	60	M10x20	24	50	M8x16
	2	270	135					19	40	M6x12
38	1.5	340	170	240	38	70	M12x24	28	60	M10x20
	2									
42	1.5	390	195	275	42	80	M12x24	38	70	M10x20
	2	370	185					32	60	
55	1.5	460	230	355	55	110	M14x28	42	80	M12x24
	2	440	220					38	70	M12x24
75	1.5	670	335	500	75	150	M16x32	55	110	M14x28
	2									

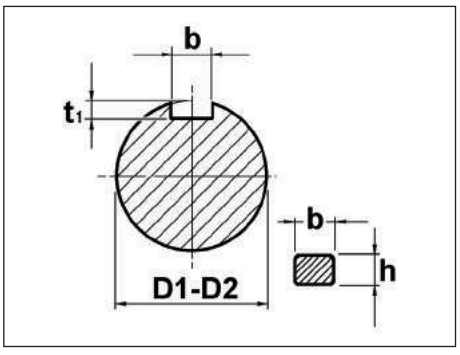

D1 - D2	b x h	t_1	
12	4 x 4	2.5	+ 0.1 0
14	5 x 5	3.0	
19	6 x 6	3.5	
24	8 x 7	4.0	+ 0.2 0
28	8 x 7	4.0	
32	8 x 7	4.0	
38	10 x 8	5.0	
42	12 x 8	5.0	
55	16 x 10	6.0	
75	22 x 14	9.0	

E

1.8 Dimensioni

1.8 Dimensions

1.8 Abmessungen

Z.AP

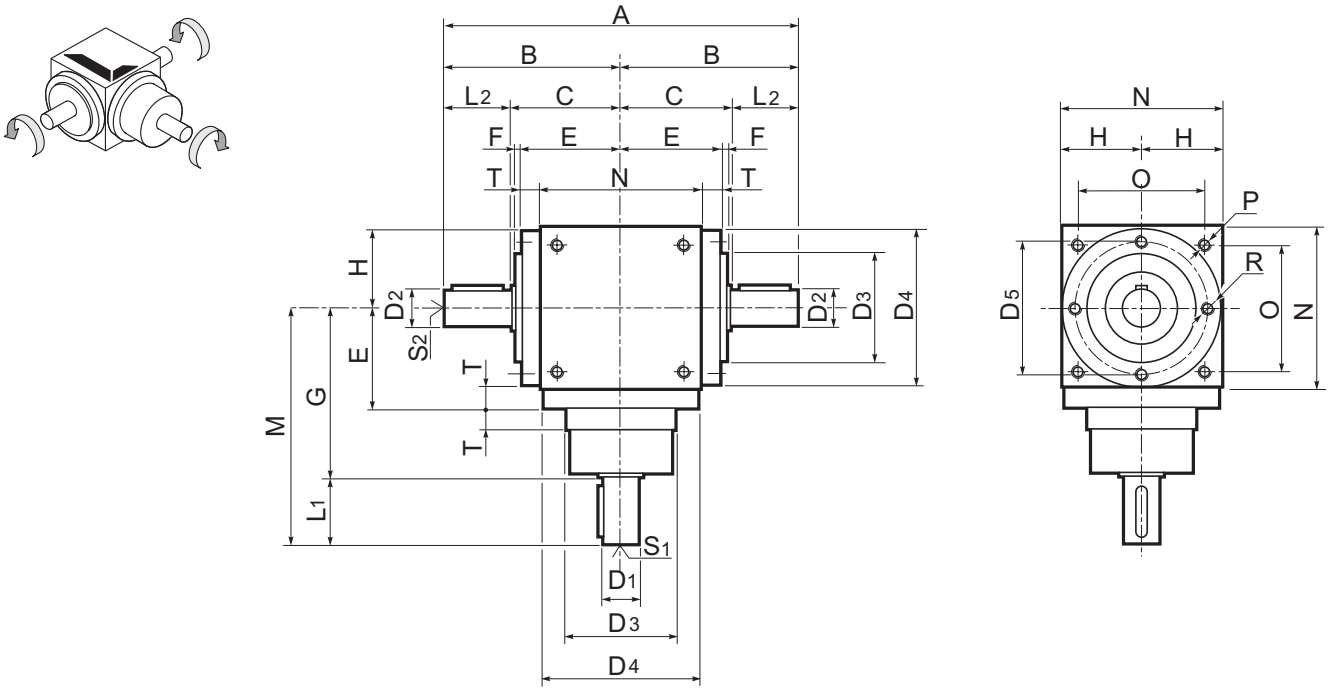

1.8 Dimensioni — *1.8 Dimensions* — 1.8 Abmessungen

Z.AP	C	D3 h8	D4	D5	E	F	G	H	N	O	P	R	T
12	—	—	—	—	—	—	—	—	—	—	—	—	—
19	65	60	86	72	59	4	100	45	90	70	M6	M6	14
24	80	70	105	88	73	5	115	55	110	88	M8	M8	18
32	95	95	135	115	88	5	145	70	140	110	M10	M10	18
38	110	120	165	145	103	5	170	85	170	136	M12	M12	18
42	125	135	190	165	118	5	195	100	200	155	M12	M12	18
55	150	170	230	205	143	5	245	120	240	190	M14	M14	23
75	225	—	300	—	195	—	350	165	330	248	M16	M16	30

Z.AP	ir	A	B	M	Albero entrata / *Input shaft* / Antriebswelle			Albero uscita / *Output shaft* / Abtriebswelle		
					D1 j6	L1	S1	D2 j6	L2	S2
12	**1-2-3**	—	—	—	—	—	—	—	—	—
19	**1-2-3**	230	115	140	19	40	M6x12	24	50	M8x16
	4-5			130	14	30	M5x10			
24	**1-2-3**	280	140	165	24	50	M8x16	32	60	M10x20
	4-5			155	19	40	M6x12			
32	**1-2-3**	330	165	205	32	60	M10x20	38	70	M12x24
	4-5			195	24	50	M8x16			
38	**1-2-3**	380	190	240	38	70	M12x24	42	80	M12x24
	4-5			230	28	60	M10x20			
42	**1-2-3**	430	215	275	42	80	M12x24	48	90	M14x28
	4-5			255	32	60	M10x20			
55	**1-2-3**	520	260	355	55	110	M14x28	70	110	M14x28
	4-5			325	42	80	M12x24			
75	**1-2-3**	750	375	500	75	150	M16x32	90	150	M16x32
	4-5			460	55	110	M14x28			

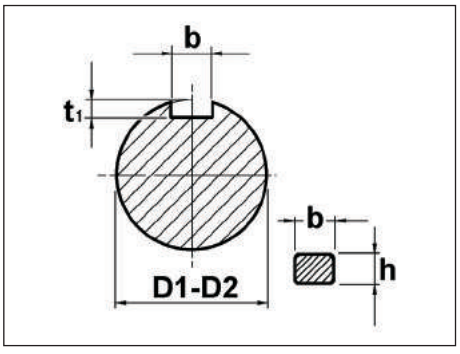

D1 - D2	b x h	t_1	
12	4 x 4	2.5	+ 0.1 0
14	5 x 5	3.0	
19	6 x 6	3.5	
24	8 x 7	4.0	+ 0.2 0
28	8 x 7	4.0	
32	8 x 7	4.0	
38	10 x 8	5.0	
42	12 x 8	5.0	
48	14 x 9	5.5	
55	16 x 10	6.0	
70	20 x 12	7.5	
75	22 x 14	9.0	
90	25 x 14	9.0	

E

1.8 Dimensioni *1.8 Dimensions* 1.8 Abmessungen

Z.C

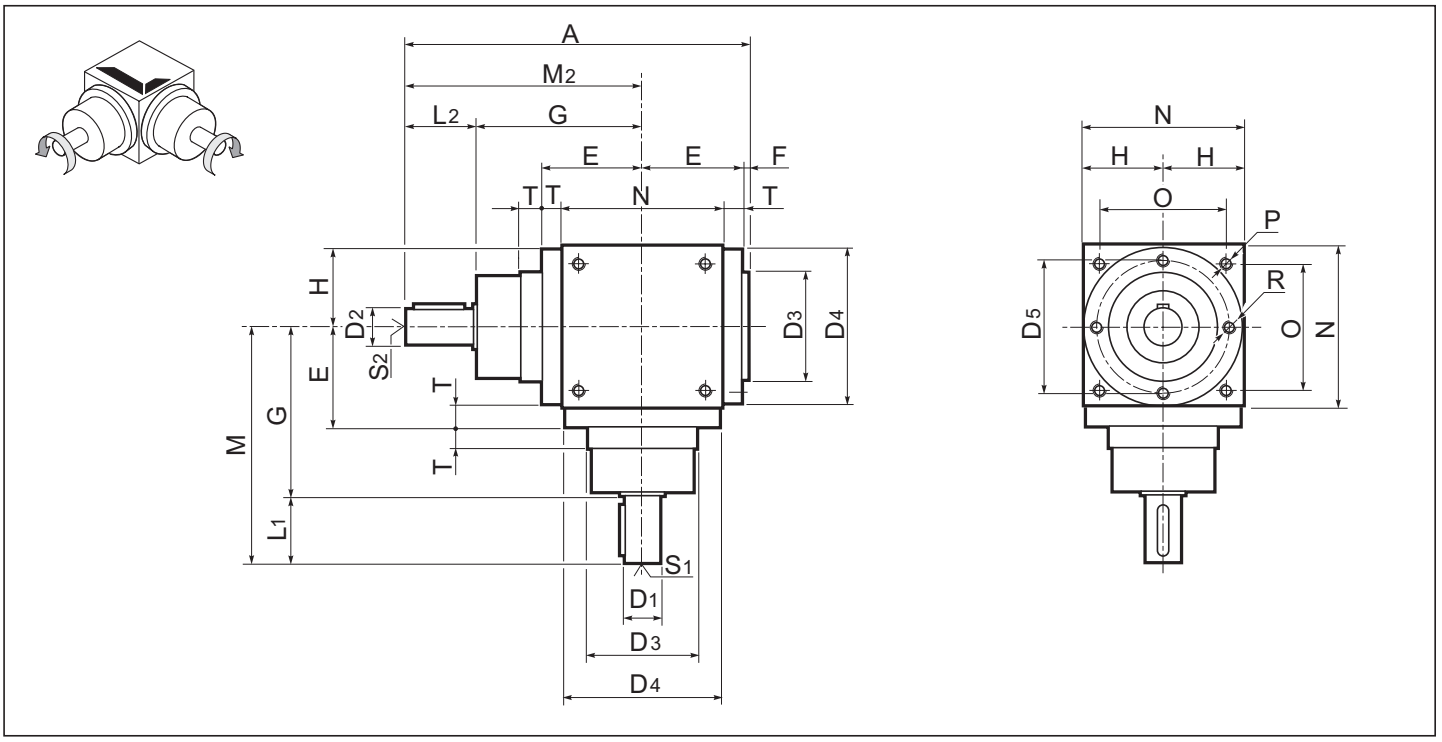

Z.MC

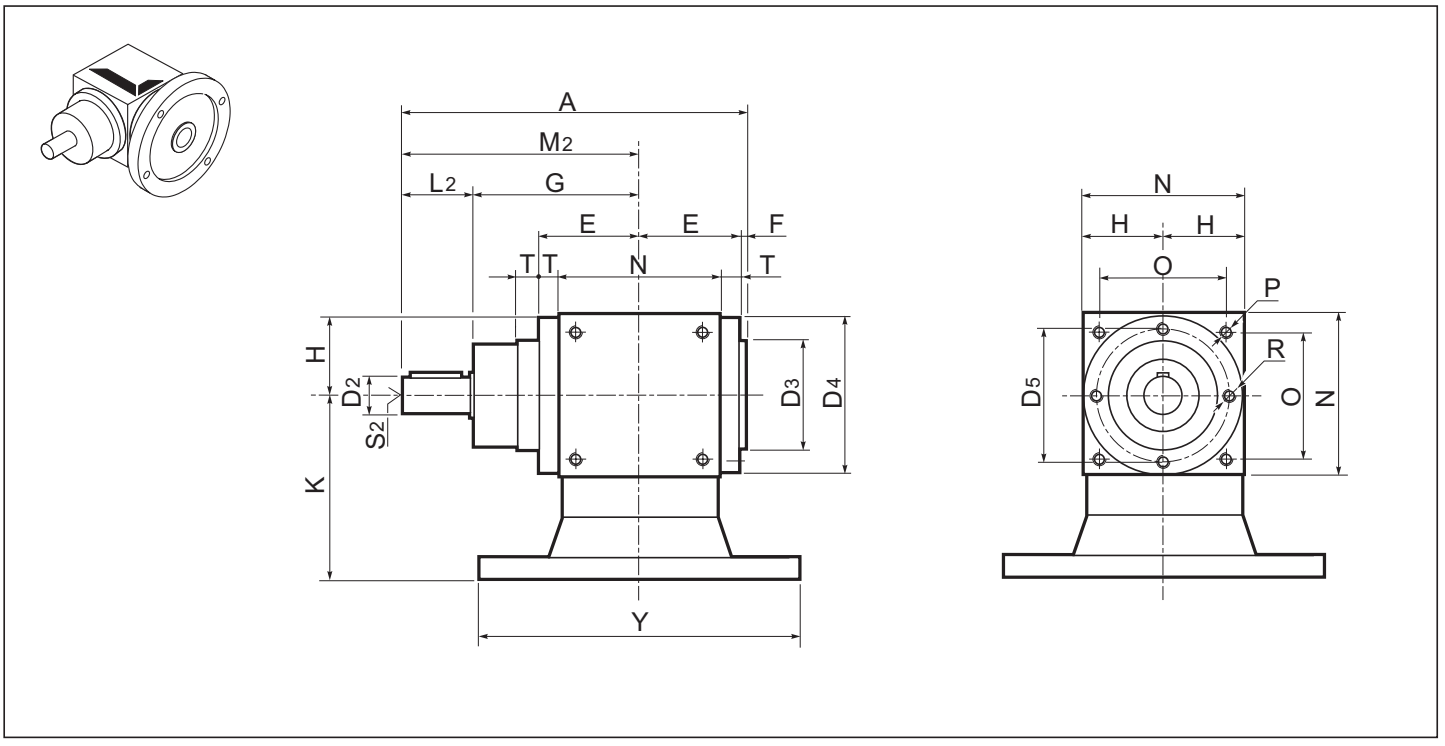

1.8 Dimensioni — *1.8 Dimensions* — 1.8 Abmessungen

Z.C	D3 h8	D4	D5	E	F	G	H	N	O	P	R	T
12	44	-	54	42	2	74	32.5	65	45	M6	M6	-
19	60	86	72	59	4	100	45	90	70	M6	M6	14
24	70	105	88	73	5	115	55	110	88	M8	M8	18
32	95	135	115	88	5	145	70	140	110	M10	M10	18
38	120	165	145	103	5	170	85	170	136	M12	M12	18
42	135	190	165	118	5	195	100	200	155	M12	M12	18
55	170	230	205	143	5	245	120	240	190	M14	M14	23
75	-	300	-	195	-	350	165	330	248	M16	M16	30

Z.C	ir	A	M	M2	Albero entrata / *Input shaft* / Antriebswelle			Albero uscita / *Output shaft* / Abtriebswelle		
					D1 j6	L1	S1	D2 j6	L2	S2
12	**1-2-3**	144	100	100	12	26	M4x8	12	26	M4x8
19	**1-2-3**	203	140	140	19	40	M6x12	19	40	M6x12
	4-5		130		14	30	M5x10			
24	**1-2-3**	243	165	165	24	50	M8x16	24	50	M8x16
	4-5		155		19	40	M6x12			
32	**1-2-3**	298	205	205	32	60	M10x20	32	60	M10x20
	4-5		195		24	50	M8x16			
38	**1-2-3**	348	240	240	38	70	M12x24	38	70	M12x24
	4-5		230		28	60	M10x20			
42	**1-2-3**	398	275	275	42	80	M12x24	42	80	M12x24
	4-5		255		32	60	M10x20			
55	**1-2-3**	503	355	355	55	110	M14x28	55	110	M14x28
	4-5		325		42	80	M12x24			
75	**1-2-3**	723	500	500	75	150	M16x32	75	150	M16x32
	4-5		460		55	110	M14x28			

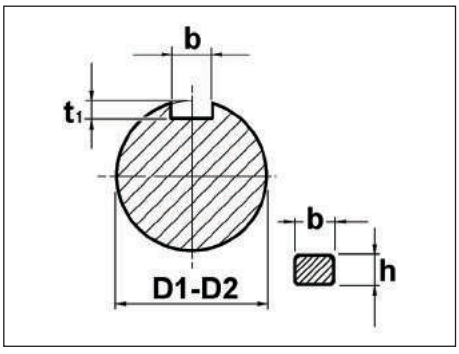

D1 - D2	b x h	t_1	
12	4 x 4	2.5	+ 0.1 0
14	5 x 5	3.0	
19	6 x 6	3.5	
24	8 x 7	4.0	+ 0.2 0
28	8 x 7	4.0	
32	8 x 7	4.0	
38	10 x 8	5.0	
42	12 x 8	5.0	
55	16 x 10	6.0	
75	22 x 14	9.0	

Z.MC	IEC	12		19		24		32		38		42		55	
		Y	K	Y	K	Y	K	Y	K	Y	K	Y	K	Y	K
	B5	105 (B14)	90	140	90	160	120	200	140	200	155	250	200	250	220
		140	90	160	90	200	120	250	140	250	155	300	200	300	220
										300	175	350	200	350	220

E

1.8 Dimensioni *1.8 Dimensions* 1.8 Abmessungen

Z.DR

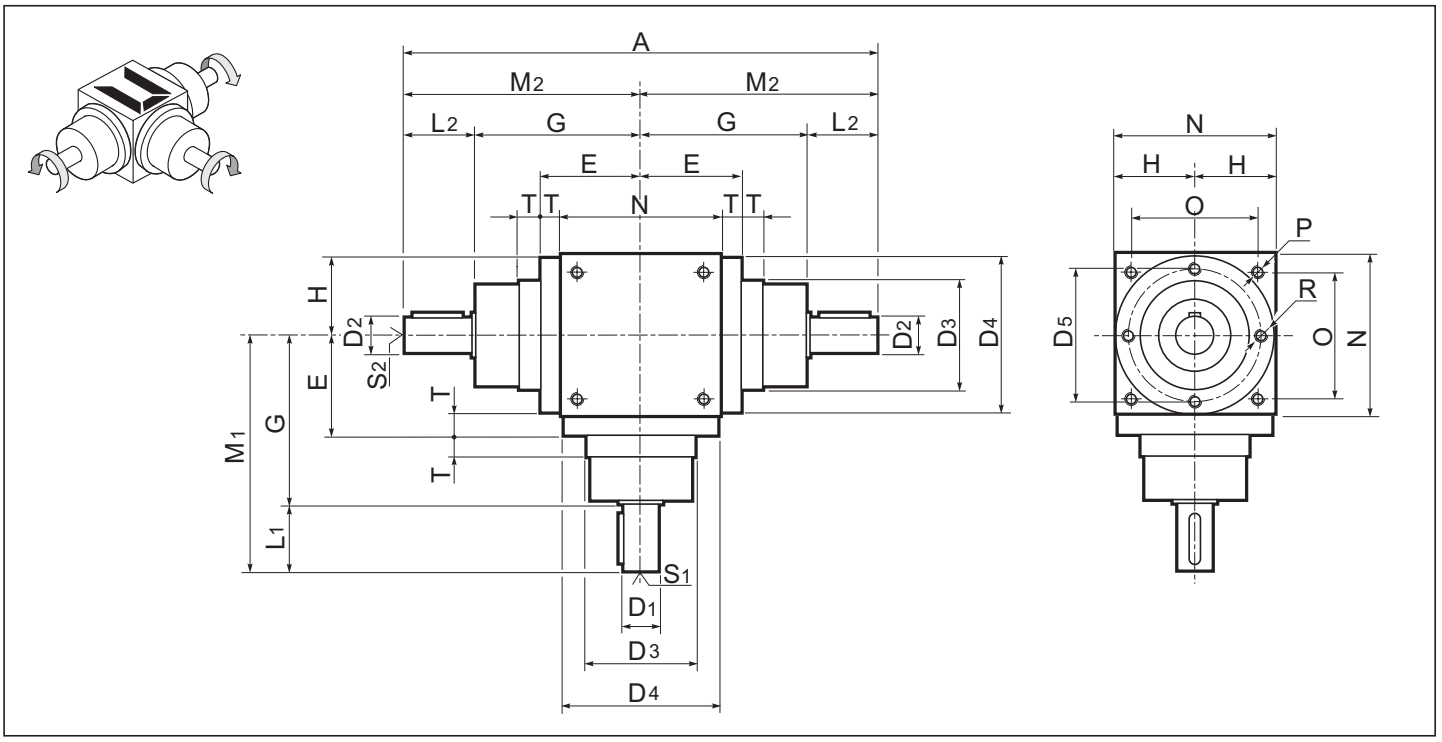

Z.MDR

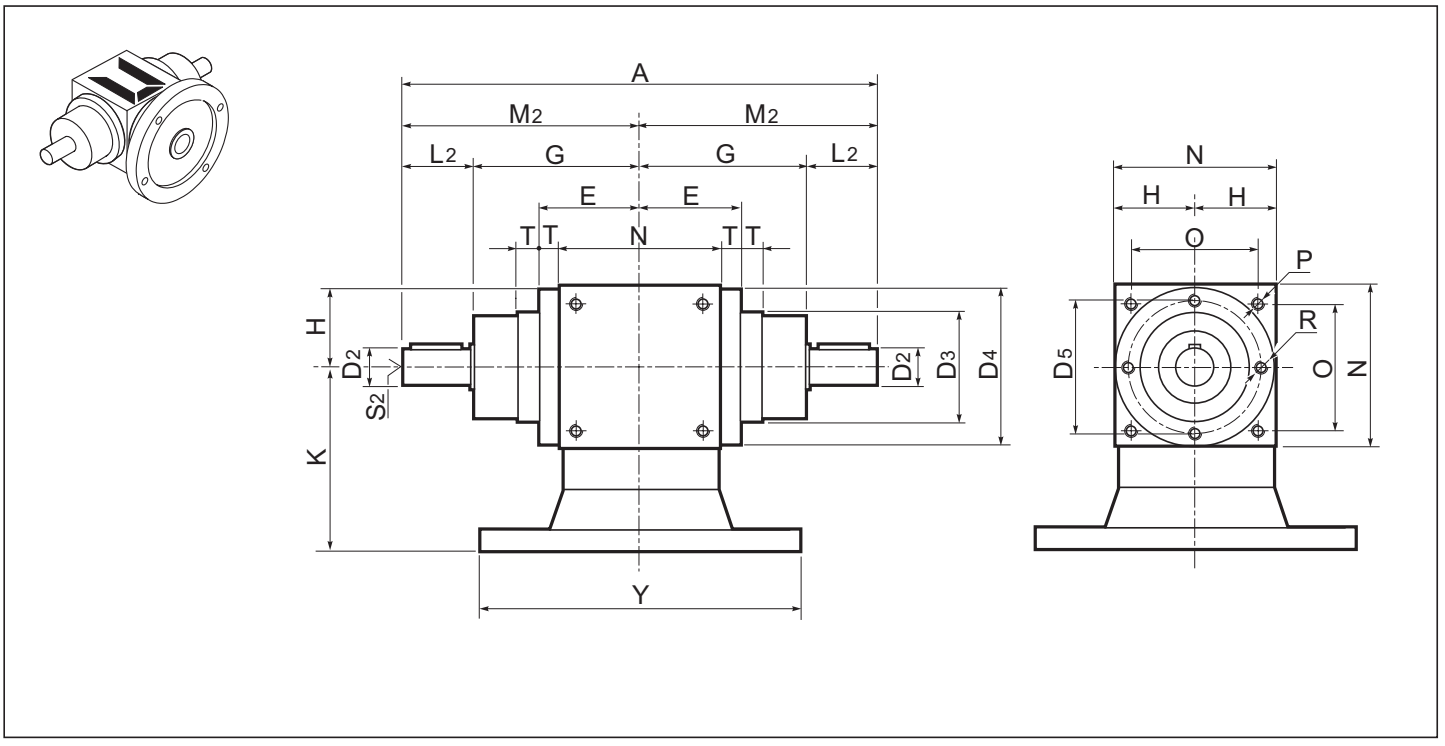

1.8 Dimensioni — *1.8 Dimensions* — 1.8 Abmessungen

Z.DR	D3 h8	D4	D5	E	F	G	H	N	O	P	R	T
12	44	—	54	42	2	74	32.5	65	45	M6	M6	—
19	60	86	72	59	4	100	45	90	70	M6	M6	14
24	70	105	88	73	5	115	55	110	88	M8	M8	18
32	95	135	115	88	5	145	70	140	110	M10	M10	18
38	120	165	145	103	5	170	85	170	136	M12	M12	18
42	135	190	165	118	5	195	100	200	155	M12	M12	18
55	170	230	205	143	5	245	120	240	190	M14	M14	23
75	—	300	—	195	—	350	165	330	248	M16	M16	30

Z.DR	ir	A	M1	M2	Albero entrata / *Input shaft* / Antriebswelle			Albero uscita / *Output shaft* / Abtriebswelle		
					D1 j6	L1	S1	D2 j6	L2	S2
12	**1-2-3**	200	100	100	12	26	M4x8	12	26	M4x8
19	**1-2-3**	280	140	140	19	40	M6x12	19	40	M6x12
	4-5		130		14	30	M5x10			
24	**1-2-3**	330	165	165	24	50	M8x16	24	50	M8x16
	4-5		155		19	40	M6x12			
32	**1-2-3**	410	205	205	32	60	M10x20	32	60	M10x20
	4-5		195		24	50	M8x16			
38	**1-2-3**	480	240	240	38	70	M12x24	38	70	M12x24
	4-5		230		28	60	M10x20			
42	**1-2-3**	550	275	275	42	80	M12x24	42	80	M12x24
	4-5		255		32	60	M10x20			
55	**1-2-3**	710	355	355	55	110	M14x28	55	110	M14x28
	4-5		325		42	80	M12x24			
75	**1-2-3**	1000	500	500	75	150	M16x32	75	150	M16x32
	4-5		460		55	110	M14x28			

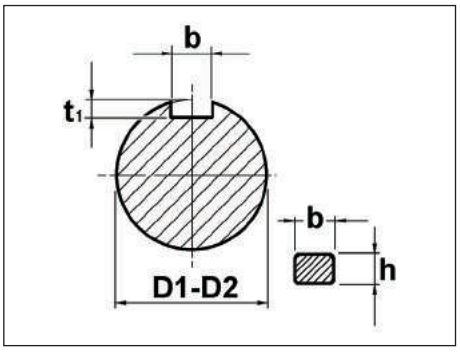

D1 - D2	b x h	t_1	
12	4 x 4	2.5	+ 0.1 0
14	5 x 5	3.0	
19	6 x 6	3.5	
24	8 x 7	4.0	+ 0.2 0
28	8 x 7	4.0	
32	8 x 7	4.0	
38	10 x 8	5.0	
42	12 x 8	5.0	
55	16 x 10	6.0	
75	22 x 14	9.0	

Z.MDR	IEC	12		19		24		32		38		42		55	
		Y	K	Y	K	Y	K	Y	K	Y	K	Y	K	Y	K
	B5	105 (B14)	90	140	90	160	120	200	140	200	155	250	200	250	220
		140	90	160	90	200	120	250	140	250	155	300	200	300	220
										300	175	350	200	350	220

E

1.8 Dimensioni *1.8 Dimensions* 1.8 Abmessungen

Z.DX

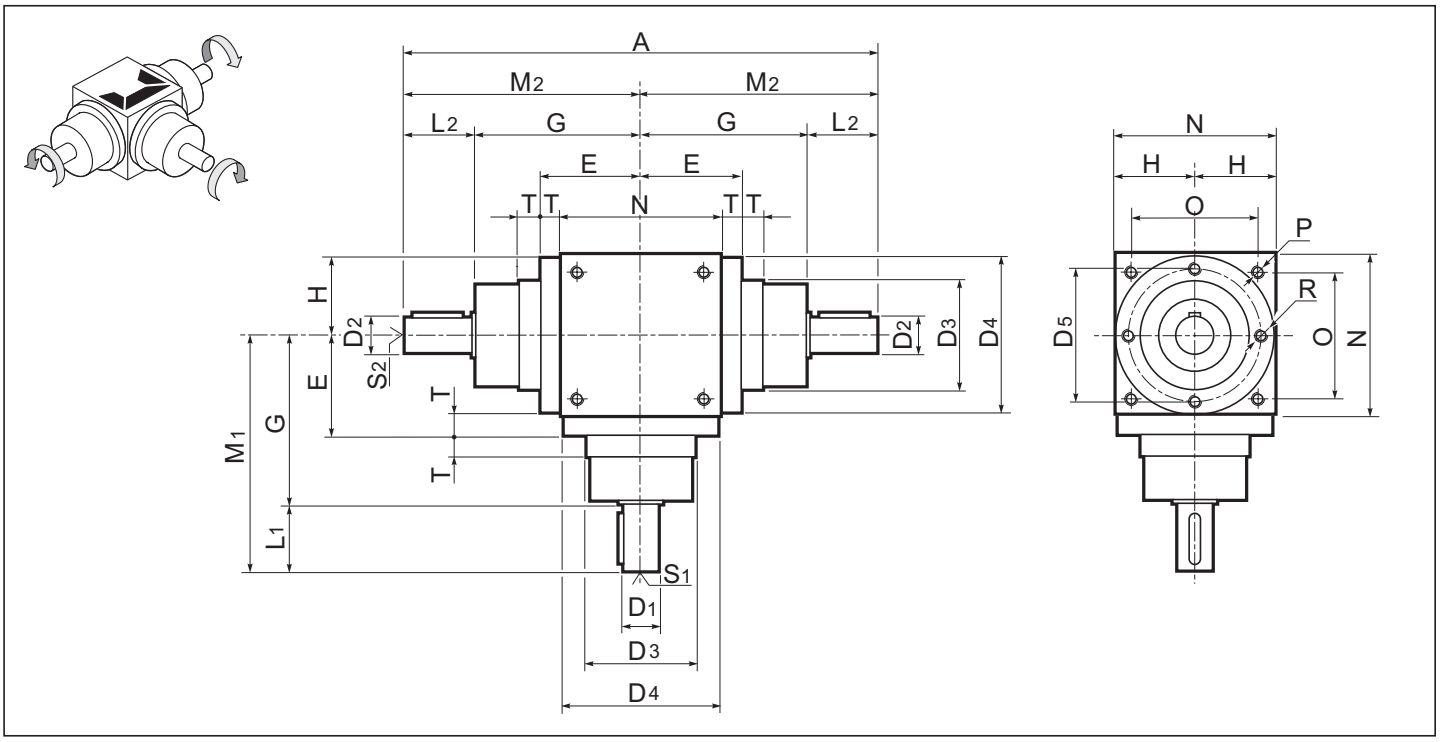

Z.MDX

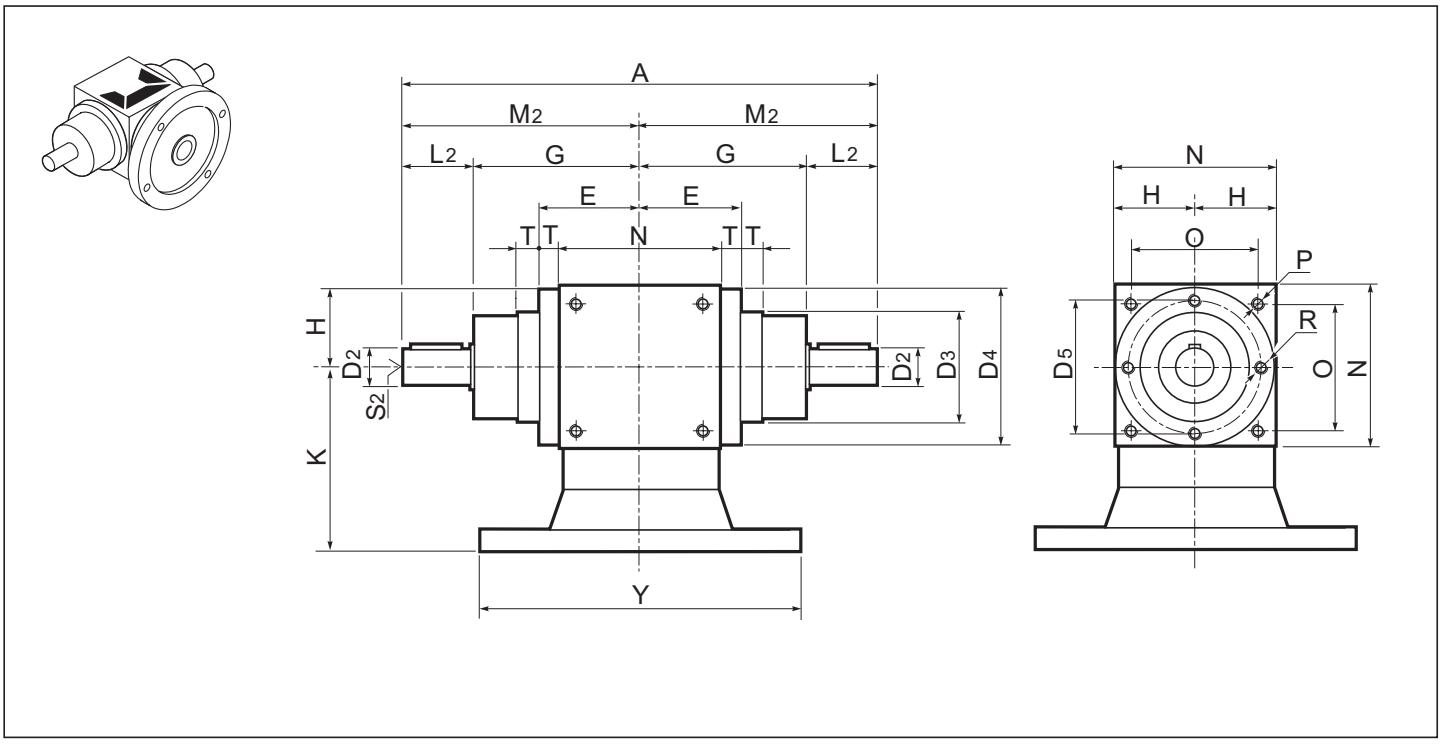

1.8 Dimensioni — *1.8 Dimensions* — 1.8 Abmessungen

Z.DX	D3 h8	D4	D5	E	G	H	N	O	P	R	T
12	44	-	54	42	74	32.5	65	45	M6	M6	-
19	60	86	72	59	100	45	90	70	M6	M6	14
24	70	105	88	73	115	55	110	88	M8	M8	18
32	95	135	115	88	145	70	140	110	M10	M10	18
38	120	165	145	103	170	85	170	136	M12	M12	18
42	135	190	165	118	195	100	200	155	M12	M12	18
55	170	230	205	143	245	120	240	190	M14	M14	23
75	-	300	-	195	350	165	330	248	M16	M16	30

Z.DX	ir	A	M1	M2	Albero entrata / *Input shaft* / Antriebswelle			Albero uscita / *Output shaft* / Abtriebswelle		
					D1 j6	L1	S1	D2 j6	L2	S2
12	**1-2-3**	200	100	100	12	26	M4x8	12	26	M4x8
19	**1-2-3**	280	140	140	19	40	M6x12	19	40	M6x12
	4-5	260	130		14	30	M5x10			
24	**1-2-3**	330	165	165	24	50	M8x16	24	50	M8x16
	4-5	310	155		19	40	M6x12			
32	**1-2-3**	410	205	205	32	60	M10x20	32	60	M10x20
	4-5	390	195		24	50	M8x16			
38	**1-2-3**	480	240	240	38	70	M12x24	38	70	M12x24
	4-5	460	230		28	60	M10x20			
42	**1-2-3**	550	275	275	42	80	M12x24	42	80	M12x24
	4-5	510	255		32	60	M10x20			
55	**1-2-3**	710	355	355	55	110	M14x28	55	110	M14x28
	4-5	650	325		42	80	M12x24			
75	**1-2-3**	1000	500	500	75	150	M16x32	75	150	M16x32
	4-5	920	460		55	110	M14x28			

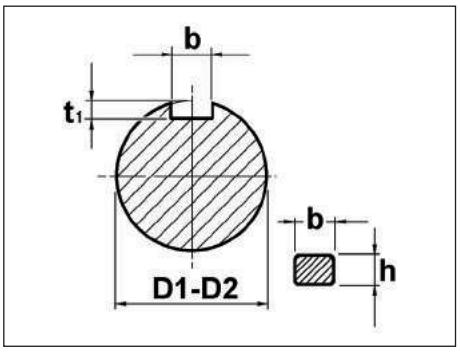

D1 - D2	b x h	t_1	
12	4 x 4	2.5	+ 0.1 0
14	5 x 5	3.0	
19	6 x 6	3.5	
24	8 x 7	4.0	+ 0.2 0
28	8 x 7	4.0	
32	8 x 7	4.0	
38	10 x 8	5.0	
42	12 x 8	5.0	
55	16 x 10	6.0	
75	22 x 14	9.0	

	IEC	12		19		24		32		38		42		55	
		Y	K	Y	K	Y	K	Y	K	Y	K	Y	K	Y	K
Z.MDX	**B5**	105 (B14)	90	140	90	160	120	200	140	200	155	250	200	250	220
		140	90	160	90	200	120	250	140	250	155	300	200	300	220
										300	175	350	200	350	220

E

1.8 Dimensioni *1.8 Dimensions* 1.8 Abmessungen

Z.B

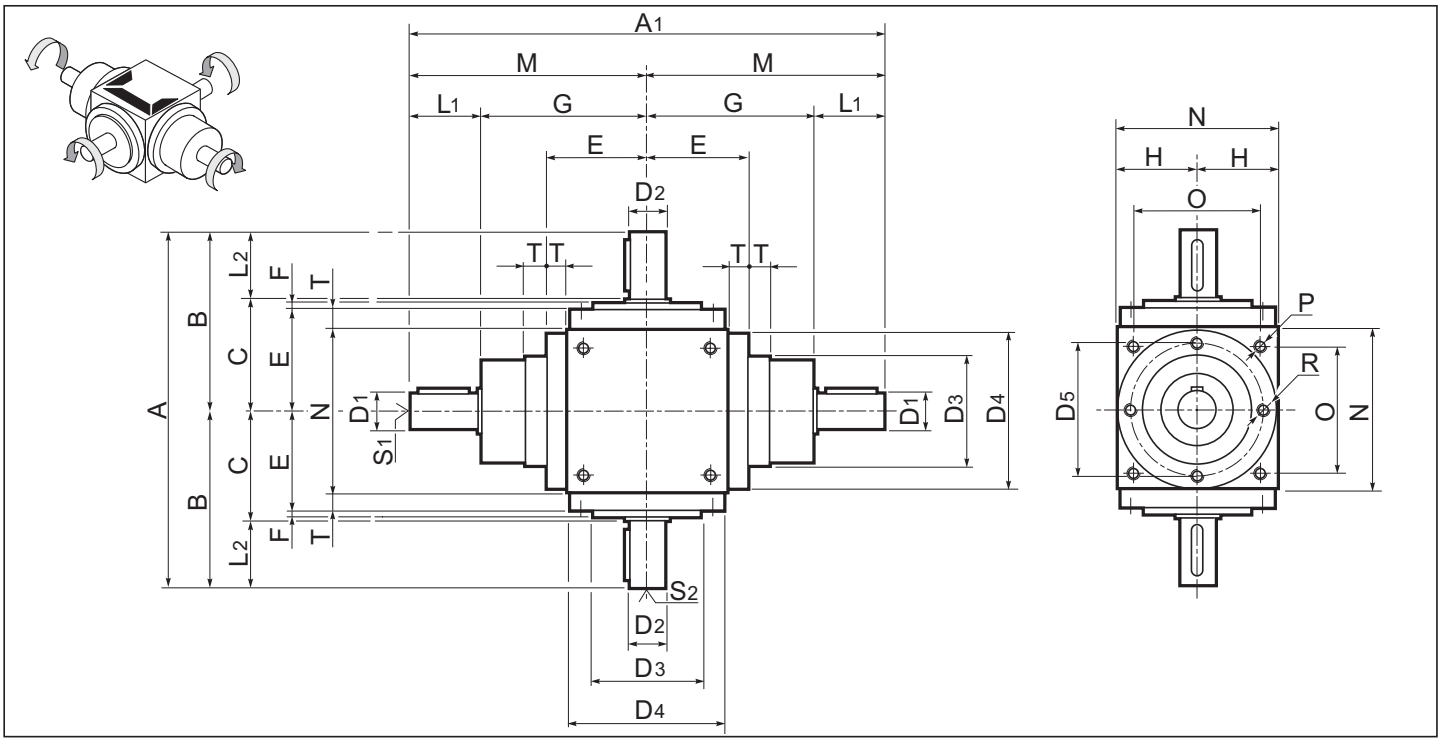

Z.MB

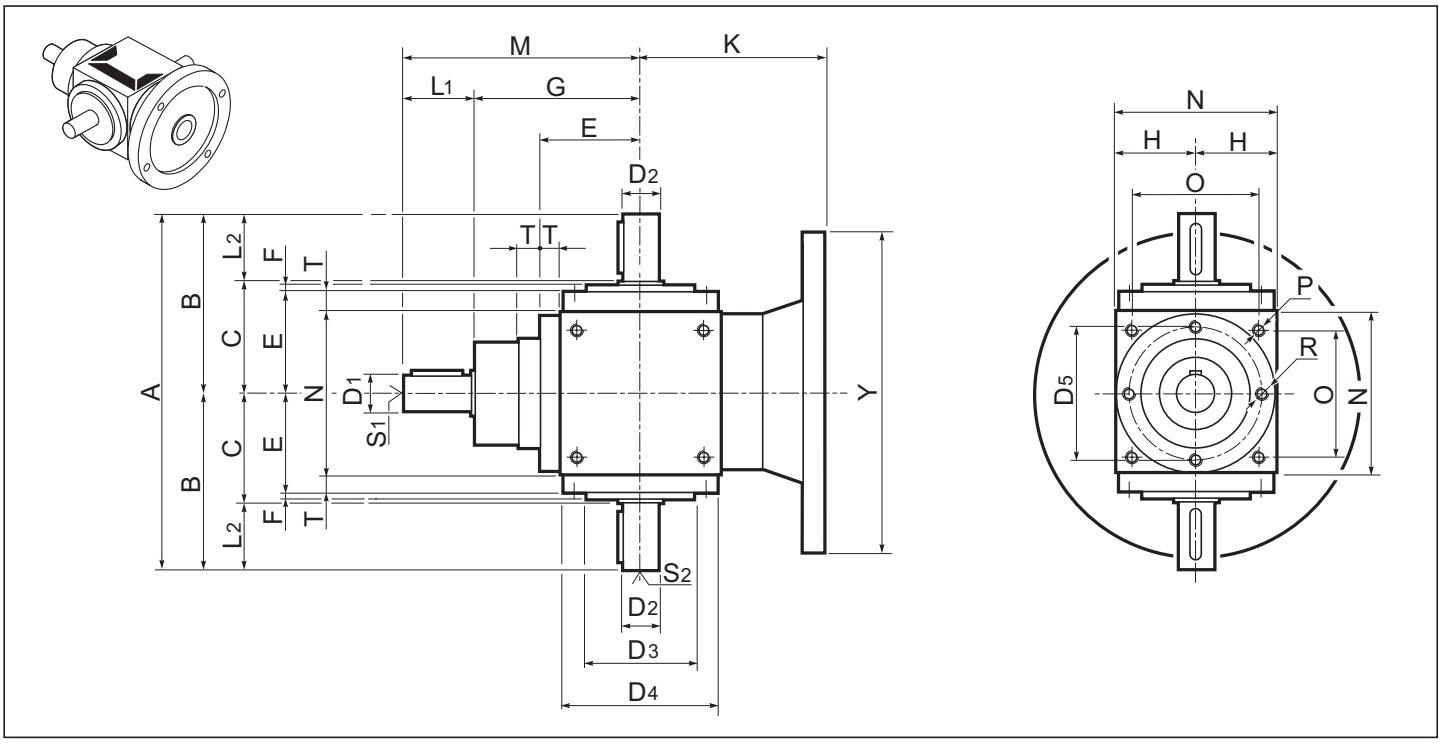

1.8 Dimensioni — *1.8 Dimensions* — 1.8 Abmessungen

Z.B	C	D3 h8	D4	D5	E	F	G	H	N	O	P	R	T
12	46	44	—	54	42	2	74	32.5	65	45	M6	M6	—
19	65	60	86	72	59	4	100	45	90	70	M6	M6	14
24	80	70	105	88	73	5	115	55	110	88	M8	M8	18
32	95	95	135	115	88	5	145	70	140	110	M10	M10	18
38	110	120	165	145	103	5	170	85	170	136	M12	M12	18
42	125	135	190	165	118	5	195	100	200	155	M12	M12	18
55	150	170	230	205	143	5	245	120	240	190	M14	M14	23
75	225	—	300	—	195	—	350	165	330	248	M16	M16	30

Z.B	ir	A1	A2	B	M	Albero entrata / *Input shaft* / Antriebswelle			Albero uscita / *Output shaft* / Abtriebswelle		
						D1 j6	L1	S1	D2 j6	L2	S2
12	**1-2-3**	200	144	72	100	12	26	M4x8	12	26	M4x8
19	**1-2-3**	280	210	105	140	19	40	M6x12	19	40	M6x12
	4-5	260			130	14	30	M5x10			
24	**1-2-3**	330	260	130	165	24	50	M8x16	24	50	M8x16
	4-5	310			155	19	40	M6x12			
32	**1-2-3**	410	310	155	205	32	60	M10x20	32	60	M10x20
	4-5	390			195	24	50	M8x16			
38	**1-2-3**	480	360	180	240	38	70	M12x24	38	70	M12x24
	4-5	460			230	28	60	M10x20			
42	**1-2-3**	550	410	205	275	42	80	M12x24	42	80	M12x24
	4-5	510			255	32	60	M10x20			
55	**1-2-3**	710	520	260	355	55	110	M14x28	55	110	M14x28
	4-5	650			325	42	80	M12x24			
75	**1-2-3**	1000	750	375	500	75	150	M16x32	75	150	M16x32
	4-5	920			460	55	110	M14x28			

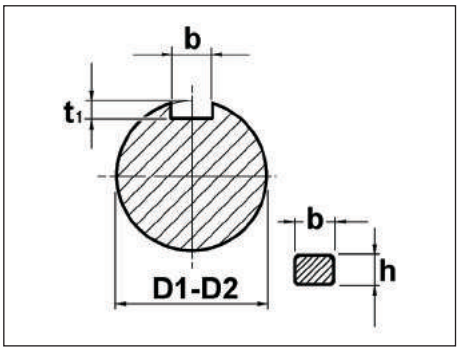

D1 - D2	b x h	t_1	
12	4 x 4	2.5	+ 0.1 0
14	5 x 5	3.0	
19	6 x 6	3.5	
24	8 x 7	4.0	+ 0.2 0
28	8 x 7	4.0	
32	8 x 7	4.0	
38	10 x 8	5.0	
42	12 x 8	5.0	
55	16 x 10	6.0	
75	22 x 14	9.0	

Z.MB	IEC	12		19		24		32		38		42		55	
		Y	K	Y	K	Y	K	Y	K	Y	K	Y	K	Y	K
	B5	105 (B14)	90	140	90	160	120	200	140	200	155	250	200	250	220
		140	90	160	90	200	120	250	140	250	155	300	200	300	220
										300	175	350	200	350	220

E

1.8 Dimensioni *1.8 Dimensions* 1.8 Abmessungen

Z.BS - Z.BD

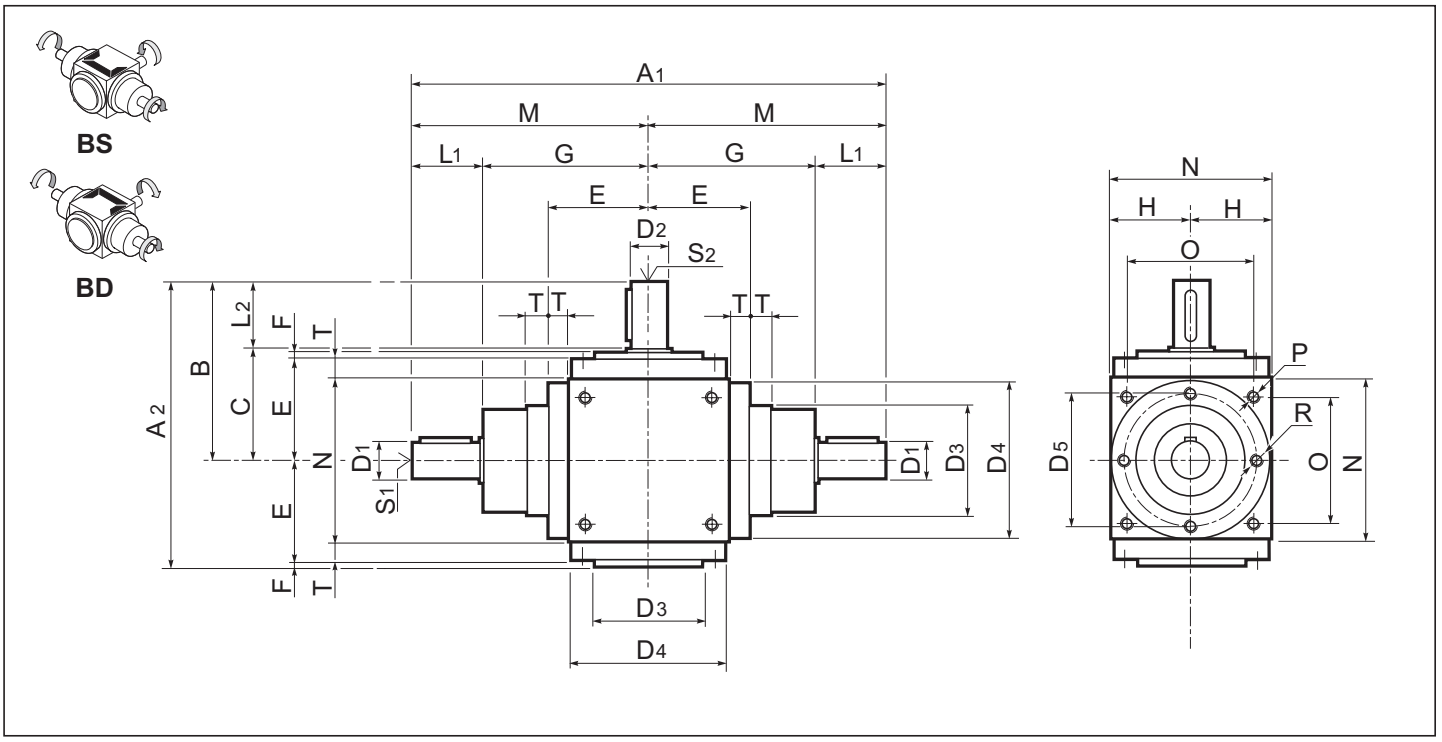

Z.MBS - Z.MBD

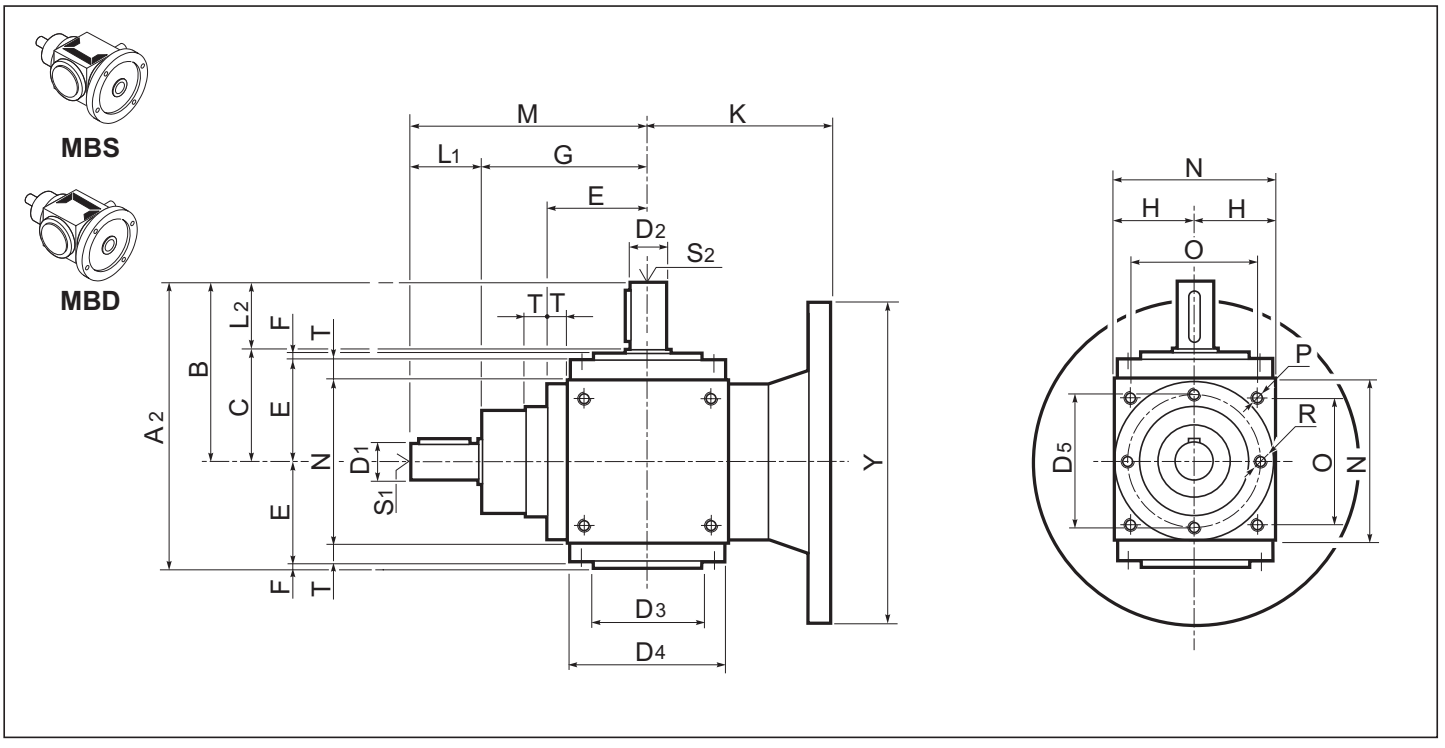

1.8 Dimensioni — *1.8 Dimensions* — 1.8 Abmessungen

Z.BS Z.BD	C	D3 h8	D4	D5	E	F	G	H	N	O	P	R	T
12	46	44	—	54	42	2	74	32.5	65	45	M6	M6	—
19	65	60	86	72	59	4	100	45	90	70	M6	M6	14
24	80	70	105	88	73	5	115	55	110	88	M8	M8	18
32	95	95	135	115	88	5	145	70	140	110	M10	M10	18
38	110	120	165	145	103	5	170	85	170	136	M12	M12	18
42	125	135	190	165	118	5	195	100	200	155	M12	M12	18
55	150	170	230	205	143	5	245	120	240	190	M14	M14	23
75	225	—	300	—	195	—	350	165	330	248	M16	M16	30

Z.BS Z.BD	ir	A1	A2	M	Albero entrata / *Input shaft* / Antriebswelle			Albero uscita / *Output shaft* / Abtriebswelle		
					D1 j6	L1	S1	D2 j6	L2	S2
12	**1-2-3**	200	116	100	12	26	M4x8	12	26	M4x8
19	**1-2-3**	280	168	140	19	40	M6x12	19	40	M6x12
	4-5	260		130	14	30	M5x10			
24	**1-2-3**	330	208	165	24	50	M8x16	24	50	M8x16
	4-5	310		155	19	40	M6x12			
32	**1-2-3**	410	248	205	32	60	M10x20	32	60	M10x20
	4-5	390		195	24	50	M8x16			
38	**1-2-3**	480	288	240	38	70	M12x24	38	70	M12x24
	4-5	460		230	28	60	M10x20			
42	**1-2-3**	550	328	275	42	80	M12x24	42	80	M12x24
	4-5	510		255	32	60	M10x20			
55	**1-2-3**	710	408	355	55	110	M14x28	55	110	M14x28
	4-5	650		325	42	80	M12x24			
75	**1-2-3**	1000	598	500	75	150	M16x32	75	150	M16x32
	4-5	920		460	55	110	M14x28			

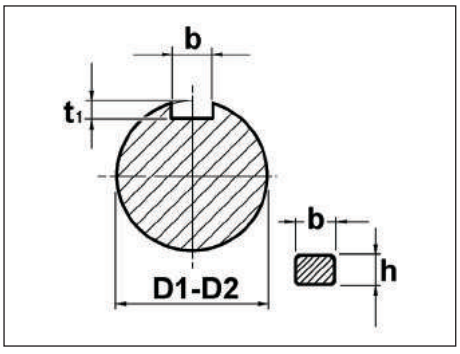

D1 - D2	b x h	t_1	
12	4 x 4	2.5	+ 0.1 0
14	5 x 5	3.0	
19	6 x 6	3.5	
24	8 x 7	4.0	+ 0.2 0
28	8 x 7	4.0	
32	8 x 7	4.0	
38	10 x 8	5.0	
42	12 x 8	5.0	
55	16 x 10	6.0	
75	22 x 14	9.0	

Z.MBS Z.MBD	IEC	12		19		24		32		38		42		55	
		Y	K	Y	K	Y	K	Y	K	Y	K	Y	K	Y	K
	B5	105 (B14)	90	140	90	160	120	200	140	200	155	250	200	250	220
		140	90	160	90	200	120	250	140	250	155	300	200	300	220
										300	175	350	200	350	220

E

1.8 Dimensioni *1.8 Dimensions* 1.8 Abmessungen

Z.AH

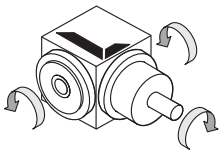

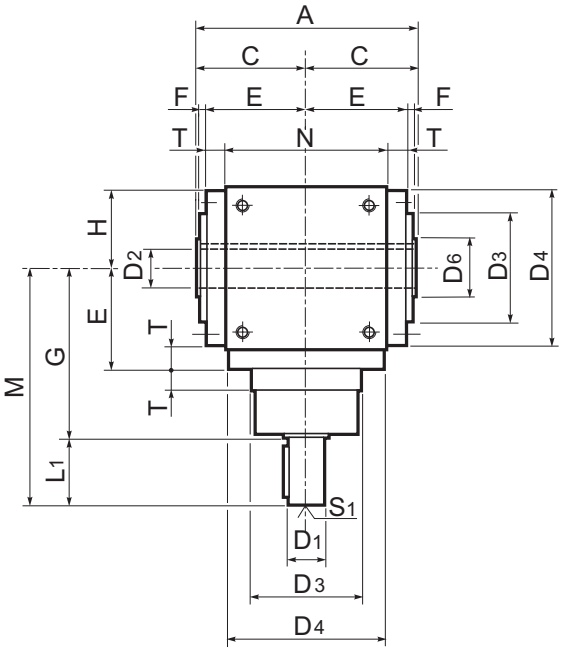

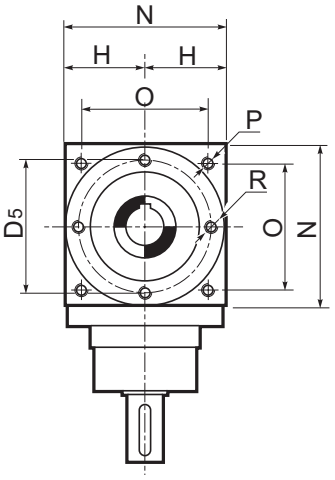

Z.MAH

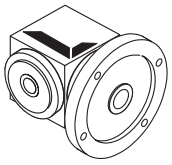

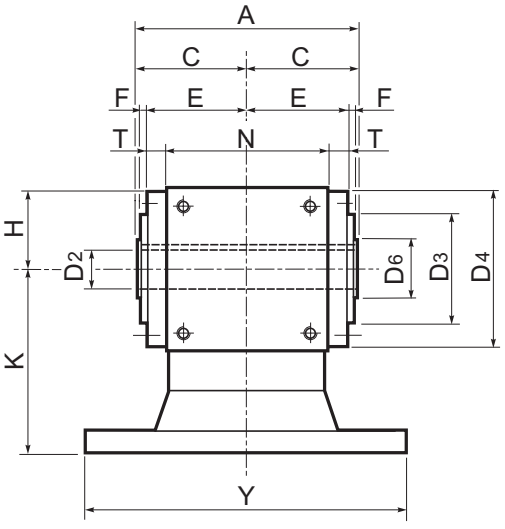

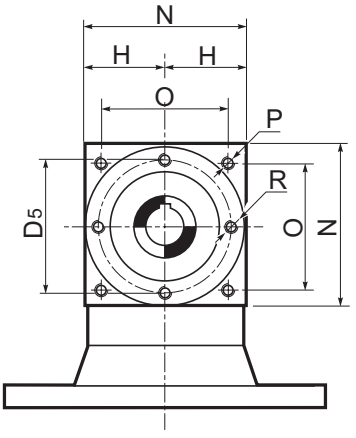

1.8 Dimensioni — *1.8 Dimensions* — 1.8 Abmessungen

Z.AH	C	D3 h8	D4	D5	D6	E	F	G	H	N	O	P	R	T
12	46	44 (h7)	65	54	—	42	2	74	32.5	65	—	—	76	9.5
19	65	60	86	72	30	59	4	100	45	90	70	M6	M6	14
24	80	70	105	88	35	73	5	115	55	110	88	M8	M8	18
32	95	95	135	115	50	88	5	145	70	140	110	M10	M10	18
38	110	120	165	145	60	103	5	170	85	170	136	M12	M12	18
42	125	135	190	165	60	118	5	195	100	200	155	M12	M12	18
55	150	170	230	205	75	143	5	245	120	240	190	M14	M14	23
75	225	—	300	—	120	195	—	350	165	330	248	M16	M16	30

Z.AH	ir	A	M	Albero entrata / *Input shaft* / Antriebswelle			Albero uscita / *Output shaft* / Abtriebswelle
				D1 j6	L1	S1	D2 H7
12	**1-2-3**	92	100	12	26	—	12
19	**1-2-3**	130	140	19	40	M6x12	19
	4-5		130	14	30	M5x10	
24	**1-2-3**	160	165	24	50	M8x16	24
	4-5		155	19	40	M6x12	
32	**1-2-3**	190	205	32	60	M10x20	32
	4-5		195	24	50	M8x16	
38	**1-2-3**	220	240	38	70	M12x24	38
	4-5		230	28	60	M10x20	
42	**1-2-3**	250	275	42	80	M12x24	42
	4-5		255	32	60	M10x20	
55	**1-2-3**	300	355	55	110	M14x28	55
	4-5		325	42	80	M12x24	
75	**1-2-3**	450	500	75	150	M16x32	75
	4-5		460	55	110	M14x28	

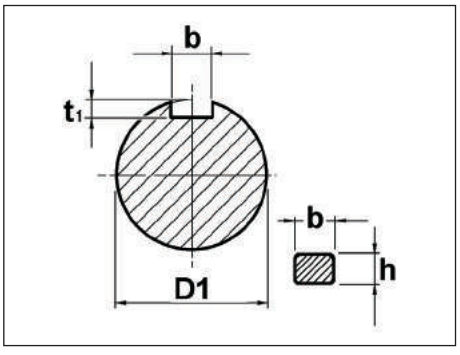

D1	b x h	t_1	
14	5 x 5	3.0	+ 0.1 0
19	6 x 6	3.5	
24	8 x 7	4.0	+ 0.2 0
28	8 x 7	4.0	
32	8 x 7	4.0	
38	10 x 8	5.0	
42	12 x 8	5.0	
55	16 x 10	6.0	
75	22 x 14	9.0	

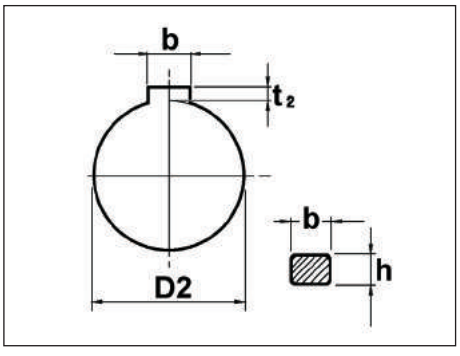

D2	b x h	t_2	
19	6 x 6	2.8	+ 0.1 0
24	8 x 7	3.3	+ 0.2 0
32	8 x 7	3.3	
38	10 x 8	3.3	
42	12 x 8	3.3	
55	16 x 10	4.3	
75	22 x 14	5.4	

Z.MAH	IEC	12		19		24		32		38		42		55	
		Y	K	Y	K	Y	K	Y	K	Y	K	Y	K	Y	K
	B5	105 (B14)	90	140	90	160	120	200	140	200	155	250	200	250	220
		140	90	160	90	200	120	250	140	250	155	300	200	300	220
										300	175	350	200	350	220

E

1.8 Dimensioni

1.8 Dimensions

1.8 Abmessungen

Z.BH

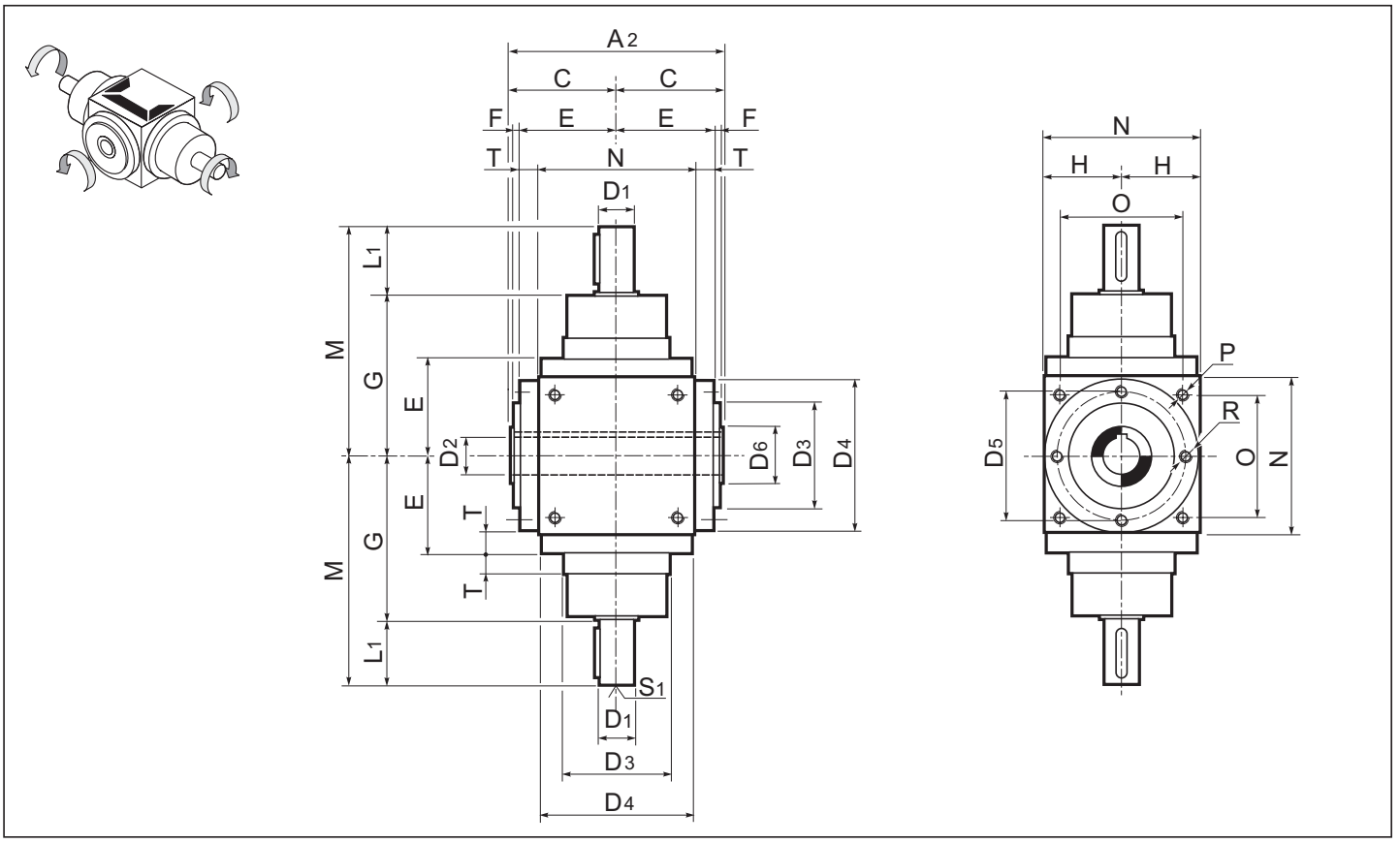

Z.MBH

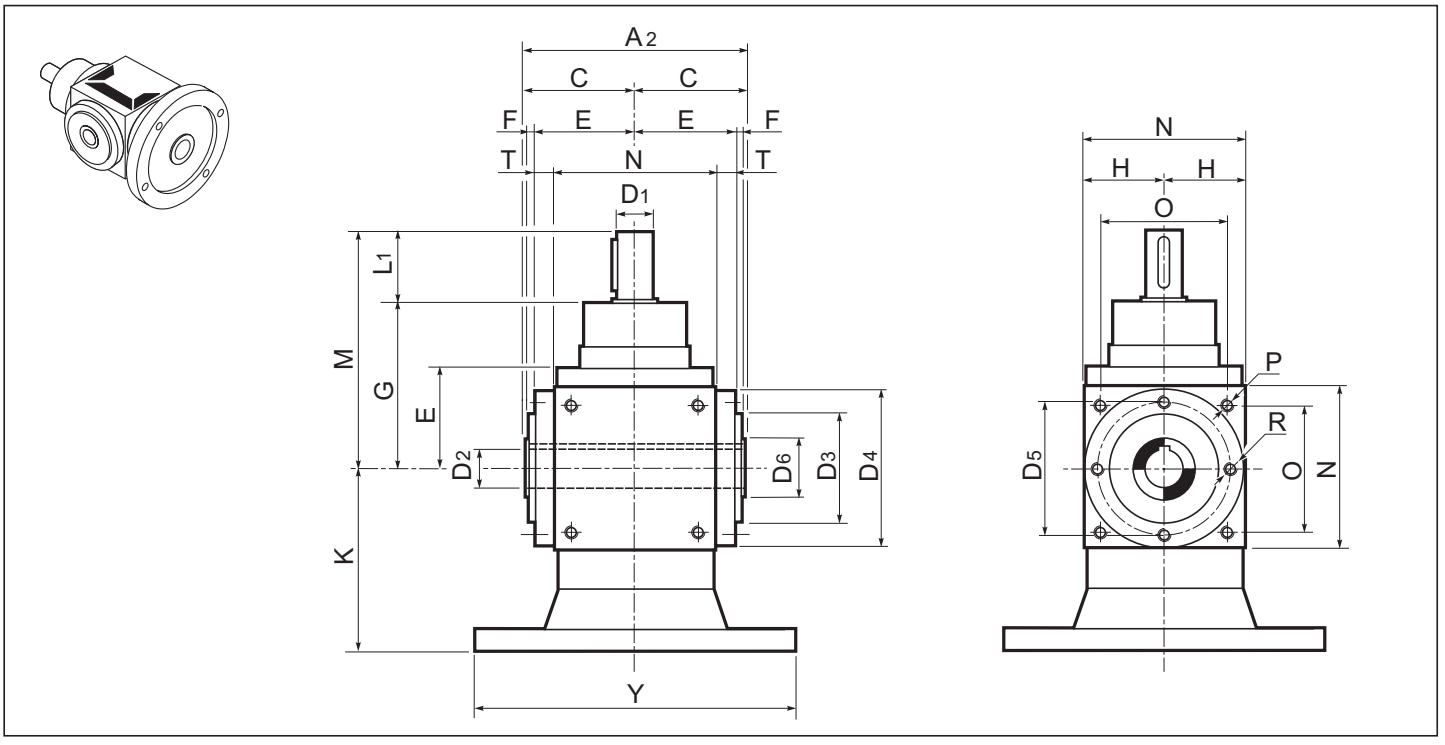

1.8 Dimensioni — *1.8 Dimensions* — 1.8 Abmessungen

Z.BH	C	D3 h8	D4	D5	D6	E	F	G	H	N	O	P	R	T
12	46	44 (h7)	65	54	—	42	2	74	32.5	65	—	—	76	9.5
19	65	60	86	72	30	59	4	100	45	90	70	M6	M6	14
24	80	70	105	88	35	73	5	115	55	110	88	M8	M8	18
32	95	95	135	115	50	88	5	145	70	140	110	M10	M10	18
38	110	120	165	145	60	103	5	170	85	170	136	M12	M12	18
42	125	135	190	165	60	118	5	195	100	200	155	M12	M12	18
55	150	170	230	205	75	143	5	245	120	240	190	M14	M14	23
75	225	—	300	—	120	195	—	350	165	330	248	M16	M16	30

Z.BH	ir	A1	A2	M	Albero entrata / *Input shaft* / Antriebswelle			Albero uscita / *Output shaft* / Abtriebswelle
					D1 j6	L1	S1	D2 H7
12	**1-2-3**	—	—	—	—	—	—	—
19	**1-2-3**	280	130	140	19	40	M6x12	19
	4-5	260		130	14	30	M5x10	
24	**1-2-3**	330	160	165	24	50	M8x16	24
	4-5	310		155	19	40	M6x12	
32	**1-2-3**	410	190	205	32	60	M10x20	32
	4-5	390		195	24	50	M8x16	
38	**1-2-3**	480	220	240	38	70	M12x24	38
	4-5	460		230	28	60	M10x20	
42	**1-2-3**	550	250	275	42	80	M12x24	42
	4-5	510		255	32	60	M10x20	
55	**1-2-3**	710	300	355	55	110	M14x28	55
	4-5	650		325	42	80	M12x24	
75	**1-2-3**	1000	450	500	75	150	M16x32	75
	4-5	920		460	55	110	M14x28	

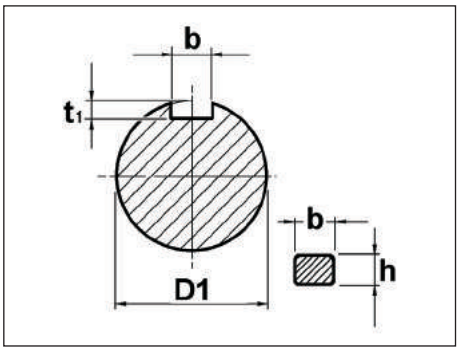

D1	b x h	t_1	
14	5 x 5	3.0	+ 0.1 0
19	6 x 6	3.5	
24	8 x 7	4.0	+ 0.2 0
28	8 x 7	4.0	
32	8 x 7	4.0	
38	10 x 8	5.0	
42	12 x 8	5.0	
55	16 x 10	6.0	
75	22 x 14	9.0	

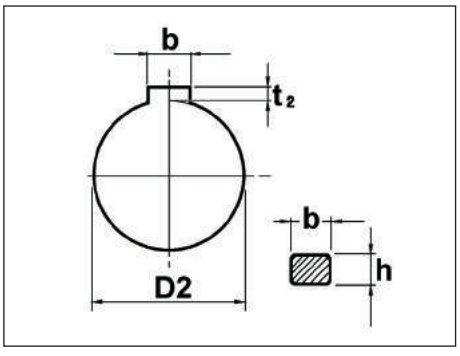

D2	b x h	t_2	
19	6 x 6	2.8	+ 0.1 0
24	8 x 7	3.3	+ 0.2 0
32	8 x 7	3.3	
38	10 x 8	3.3	
42	12 x 8	3.3	
55	16 x 10	4.3	
75	22 x 14	5.4	

Z.MBH	IEC	12		19		24		32		38		42		55	
		Y	K	Y	K	Y	K	Y	K	Y	K	Y	K	Y	K
	B5	105 (B14)	90	140	90	160	120	200	140	200	155	250	200	250	220
		140	90	160	90	200	120	250	140	250	155	300	200	300	220
										300	175	350	200	350	220

1.9 Accessori *1.9 Accessories* 1.9 Zubehör

FLANGIA DI ACCOPPIAMENTO FC / *FC FLANGE /VERBINDUNGSFLANSCH FC*

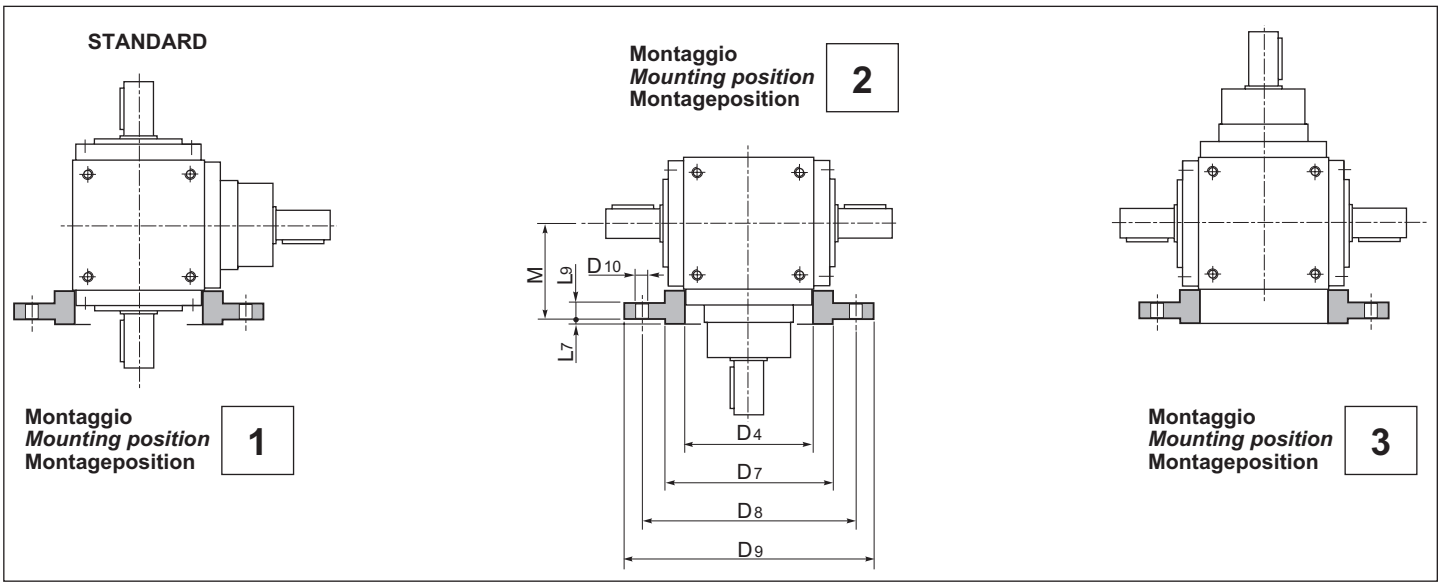

FLANGIA DI ACCOPPIAMENTO FP / *FP FLANGE / VERBINDUNGSFLANSCH FP*

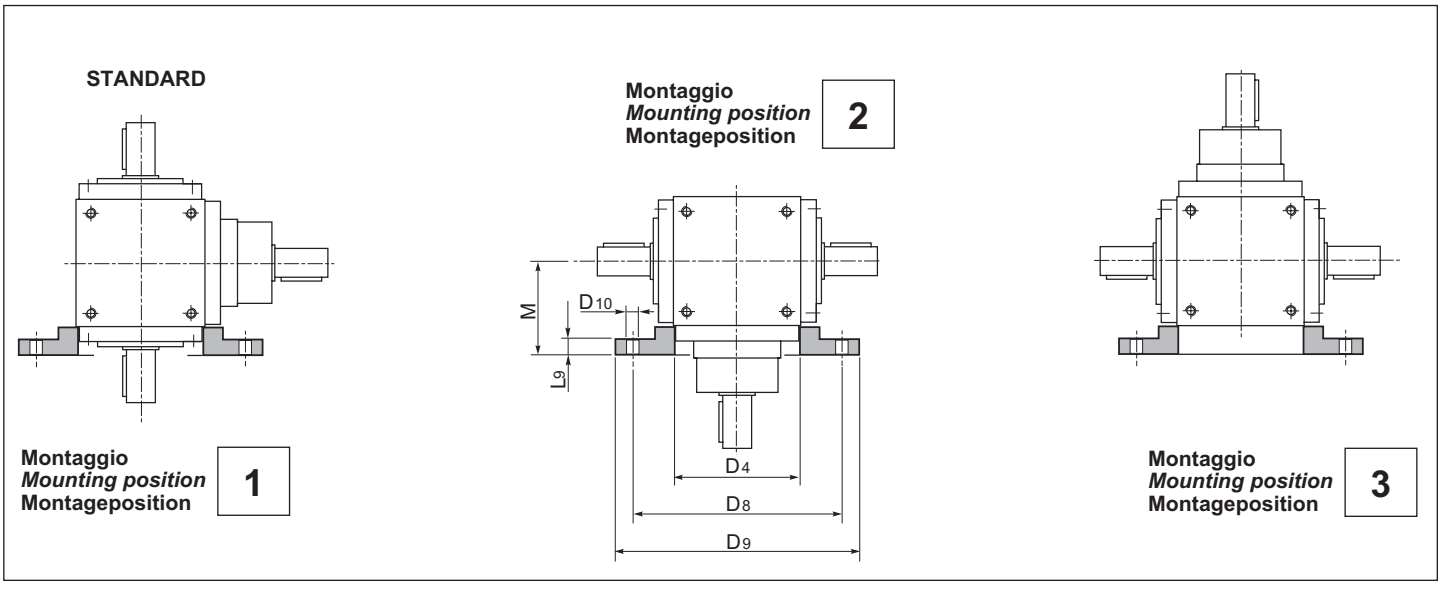

Z.	D4 H8	D7 h8	D8	D9	D10	L7	L9	M
12	—	—	—	—	—	—	—	—
19	86	110	130	160	9	3.5	12	70
24	105	130	165	200	11	3.5	13	85
32	135	180	215	250	14	4	15	105
38	165	230	265	300	14	4	15	125
42	190	230	265	300	14	4	15	145
55	230	250	300	350	18	5	18	175
75	300	350	400	450	18	5	25	230

1.0 RINVII ANGOLARI ZL
1.0 RIGHT ANGLE ZL
1.0 WINKELGETRIEBE ZL

ZL

1.1	Caratteristiche tecniche	*Technical characteristics*	Technische Eigenschaften	F1
1.2	Designazione	*Designation*	Bezeichnungen	F2
1.3	Versioni	*Versions*	Ausführungen	F3
1.4	Lubrificazione	*Lubrication*	Schmierung	F3
1.6	Carichi radiali e assiali	*Axial and overhung loads*	Radiale und Axiale Belastungen	F4
1.6	Prestazioni rinvii angolari	*Gearmotors performances*	Leistungen der Getriebe	F5
1.7	Dimensioni	*Dimensions*	Abmessungen	F6

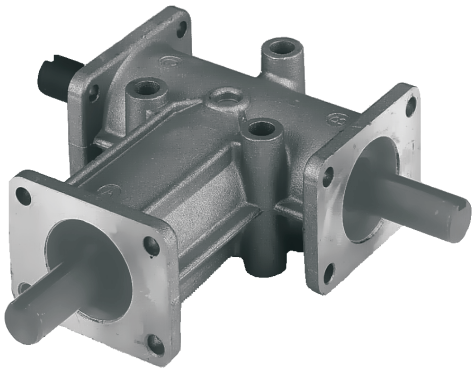

1.1 Caratteristiche tecniche

Il nostri rinvii angolari serie ZL, sono molto leggeri ed hanno un funzionamento silenzioso.
Hanno la carcassa monoblocco in alluminio rigida e precisa, gli ingranaggi Gleason ed i cuscinetti largamente dimensionati.
I giochi angolari vanno dai 15’ ai 30’ e sono sempre forniti con il lubrificante adatto a tutte le posizioni di montaggio.
Sono disponibili con 3 flange di fissaggio, 3 o 4 fori passanti di
bloccaggio sul corpo, 2 o 3 alberi e rapporti di riduzione 1-2-3.

1.1 Technical characteristics

OOur right angle gears ZL series are not heavy and are silent functioning.
The one body piece in alluminium is strong, the gears are Gleason and the bearings are overrated as well.
The backlash is 15’-30’ and they are filled with lubricant for all the mounting positions.
These right angle gears are available with 3 fixing flange, 3 or 4 locking
through holes on the body, 2 or 3 shaft and ratio 1-2-3.

1.1 Technische Eigenschaften

Die Winkelgetriebe der ZL–Serie zeichnen sich durch geringes Gewicht und hohe Laufruhe aus.
Das Monoblockgehäuse ist äußert stabil und präzise gefertigt; die Gleason-Zahnräder sowie die Lager sind großzügig dimensioniert.
Das Flankenspiel liegt im Bereich 15’ - 30’ und die Ölfüllung erfolgt gemäß der Einbaulage.
Zur Lieferung stehen drei mögliche Flansche zur Verfügung; drei oder vier Durchgangsbohrungen für die Gehäusebefestigung, zwei oder drei Wellen und Untersetzungen 1-2-3.

F

1.1 Caratteristiche tecniche

I rinvii angolari serie **ZL** sono stati progettati per applicazioni industriali ove occorra trasmettere un moto rotatorio di potenza tra alberi disposti perpendicolarmente tra loro.
Possono essere a 3 uscite con rapporto di trasmissione:1:1 o 2:1.

Carte

Monoblocco rigido in lega d'alluminio con 5 piani di attacco e 3 possibilità di centraggio.

Ingranaggi

Conici a dentatura spiroidale GLEASON. Il gioco angolare fra gli ingranaggi è regolato per garantire un ingranamento ed una silenziosità ottimali.

Alberi

L'attacco esterno è previsto con un trascinamento a linguetta a norma UNI (ad eccezione della grandezza 331). Le posizioni angolari delle linguette sugli alberi entrata e uscita non hanno particolari riferimenti tra loro.

Cuscinetti

Sono a sfere, largamente dimensionati e a gola profonda.

Tenute lubrificante interno

Con anelli di tenuta su tutti i modelli.
A richiesta sono disponibili anelli speciali per alte o basse temperature.

1.1 Technical characteristics

ZL *Series right-angle drives are designed for industrial applications where rotary power must be transferred between two shafts at right-angles to each other.*
ZL *series units are available in 6 different sizes with 3 outputs and with 1:1 or 1:2 transmission ratios.*

Housing

Single-piece aluminium alloy casting with 5 mounting points and 3 flanges.

Gears

GLEASON spiral toothed bevel gears. Units are manufactured with a backlash tolerance to ensure perfect gear meshing and silent operation.

Shafts

Coupling to external power take-off is by ISO standard driving keys (except for size 331). No special position references are needed for the Keyways on input and output shafts, which can therefore be made at any angle.

Bearings

Large bearings in deep races.

Oilseals

Oilseal rings are fitted to all models. Special seal rings for high or low temperatures are available upon request.

1.1 Technische Eigenschaften

Die Winkelgetriebe der Serie **ZL** sind für den industriellen Einsatz geeignet, wenn die Drehbewegung um 90° umgelenkt werden muss.
Die Getriebe sind mit 3 Wellenenden ausgerüstet und können mit Untersetzungsverhältnis 1:1 bzw. 1:2 geliefert werden.

Gehäuse

Starres Getriebegehäuse aus Leichtmetall; 5 Befestigungsflächen und 3 Zentrierlagen.

Verzahnung

Kegelradggetriebe mit Schrägverzahnung GLEASON.
Das Zahnflankenspiel zwischen den Rädern gewährleistet optimale Eingriffseigenschaften und eine hohe Laufruhe.

Wellen

Die Kopplung der Abtriebswelle erfolgt mit Paßfeder gemäß der UNI-Norm (Mit Ausnahme der Baugröße 331. Die Winkelpositionen der Paßfedern auf den Antriebs-und Abtriebswellen sind voneinander unabhängig.

Lager

Großzügig dimensionierte Kugellager mit tiefer Laufrille.

Dichtungen

Sämtliche Typen sind mit Dichtringen versehen. Auf Anfrage sind Spezialdichtringe für hohe bzw. niedrige Temperaturen lieferbar.

1.2 Designazione

	Grand. *Size* Größe	Posizione alberi *Shafts position* Wellenposition	ir
ZL	**331 432** **332 433** **333 434** **334**	**AB** **AC** **BC**	1.1 2.1

1.2 Designation

1.2 Bezeichnung

Esempio / *Example* Beispiel

ZL 331 BC 1.1

1.3 Versioni

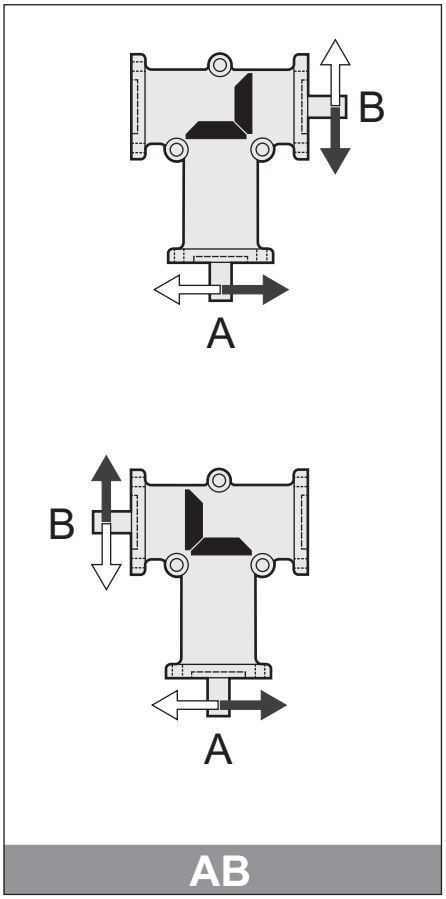

A = albero entrata
B = albero uscita lato corona conica
C = albero uscita lato opposto alla corona conica

Le figure mostrano, per ogni versione, i sensi di rotazione degli alberi.
Per ogni versione, lo stesso rinvio è rappresentato in due posizioni ruotate di 180°.

(1) **ATTENZIONE!-*WARNING!*-ACHTUNG!** ()/(/()

1.3 Versions

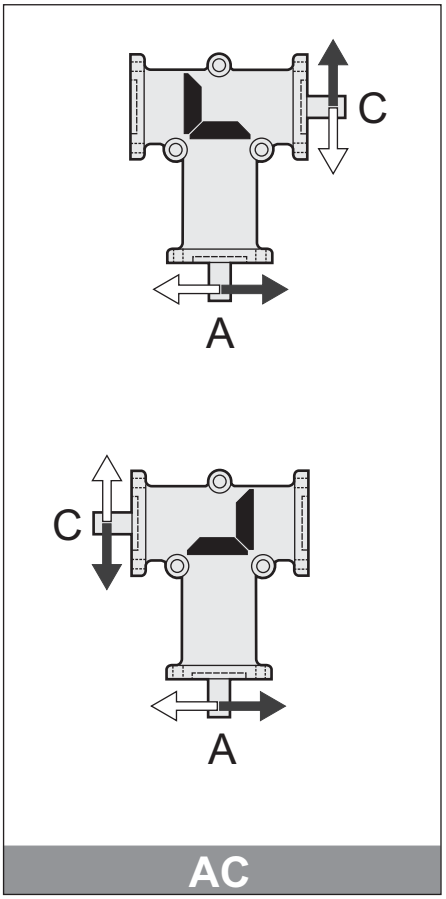

A = Input shaft
B = Output shaft on ring bevel gear side
C = Ouput shaft on opposite side to ring bevel gear

For each version, the figures will show the shaft directions of rotation.
For each version, the same transmission is shown in two positions turned by 180°.

1.3 Ausführung

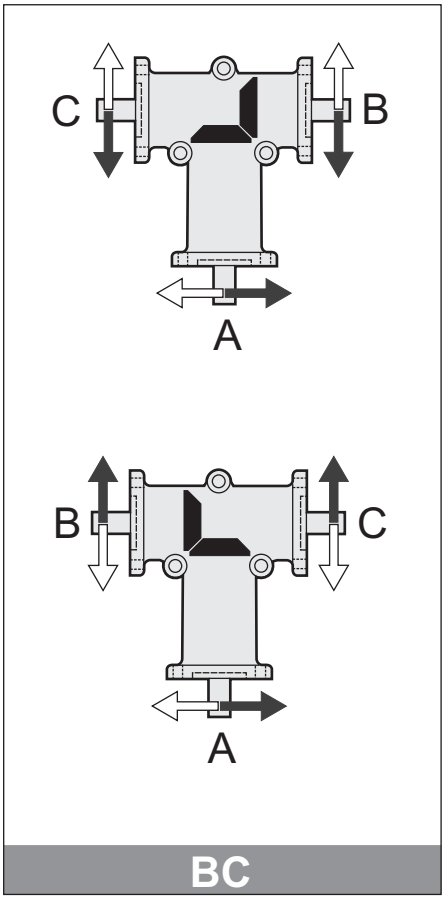

A = Antriebswelle
B = Abtriebswelle Seite Kegelkranz
C = Abtriebswelle auf der gegenüberliegenden Seite des Kegelkranzes

Die Abbildungen zeigen für jede Version die entsprechende Drehrichtung der Wellen.
Für jede Version wird das gleiche Getriebe in zwei, jeweils um 180° versetzen Positionen dargestellt.

F

1.4 Lubrificazione

Vedere paragrafo 1.12
Sezione A

1.4 Lubrication

Look at chapter 1.12
Section A.

1.4 Schmierung

s. S. 1.12-Abschnitt A.

1.5 Carichi radiali e assiali

Le trasmissioni effettuate tramite pignoni per catena, ruote dentate o pulegge generano delle forze radiali (Fr) sugli alberi dei riduttori.
I valori dei carichi radiali e assiali generati dall'applicazione debbono essere sempre minori o uguali a quelli ammissibili indicati nelle tabelle.

1.5 *Radial and axial loads*

Transmissions implemented by means of chain pinions, gears or pulleys generate radial forces (Fr) on the gear unit shafts.
The value of the radial and axial loads generated by the application must always be less than or equal to admissible values as *indicated in the chart.*

1.5 Radial und axial Belastungen (N)

Antriebe mit Kettenrädern, Zahnrädern oder Riemenscheiben erzeugen radiale Kräfte (Fr) an den Wellen der Untersetzungsgetriebe. Die Werte der Quer- und Längsbelastungen, die durch die Anwendungen hervorgerufen werden, dürfen nicht über den den in den Tabellen angegebenen zulässigen Werten liegen.

Tab. 5.1

i	$F_{r1} = F_{r2}$ [N]						
	ZL 331	**ZL 332**	**ZL 333**	**ZL 334**	**ZL 432**	**ZL 433**	**ZL 434**
Tutti /*All* / Alle	210	410	760	880	530	650	800
i	$F_{a1} = F_{a2}$ [N]						
	ZL 331	**ZL 332**	**ZL 333**	**ZL 334**	**ZL 432**	**ZL 433**	**ZL 434**
Tutti /*All* / Alle	110	200	430	490	300	450	600

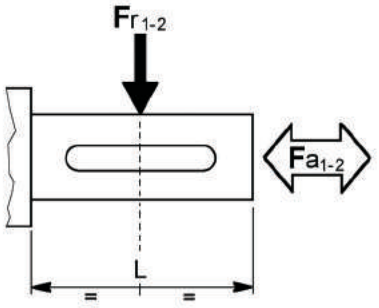

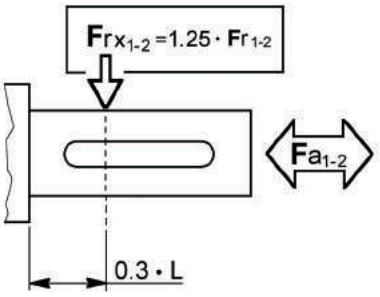

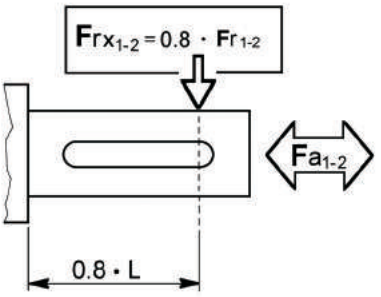

I carichi radiali indicati nelle tabelle si intendono applicati a metà della sporgenza dell'albero standard e sono riferiti ai riduttori operanti con fattore di servizio 1.
Per i carichi non agenti sulla mezzeria dell'albero lento o veloce si ha:

a 0.3 della sporgenza:
$Fr_x = 1.25 \times Fr_{1-2}$
a 0.8 dalla sporgenza:
$Fr_x = 0.8 \times Fr_{1-2}$

The radial loads shown in the tables are applied on the centre line of the standard shaft extension and are related to gearboxes working with service factor 1.
For loads which are not applied on the centre line of the output or input shaft, following values will be obtained:

at 0.3 from extension:
$Fr_x = 1.25 \times Fr_{1-2}$
at 0.8 from extension:
$Fr_x = 0.8 \times Fr_{1-2}$

Bei den in der Tabelle angegebenen Radialbelastungen wird eine Krafteinwirkung auf die Mitte des Wellenendes zugrunde gelegt; außerdem arbeiten die Getriebe mit Betriebsfaktor 1.
Bei Lasten, die nicht auf die Mitte der Ab- und Antriebswellen wirken, legt man folgende Werte zugrunde:

0.3 vom Wellenabsatz entfernt:
$Fr_x = 1.25 \times Fr_{1-2}$
0.8 vom Wellenabsatz entfernt:
$Fr_x = 0.8 \times Fr_{1-2}$

1.6 Prestazioni riduttori ZL — *1.6 ZL gearboxes performances* — 1.6 Leistungen der ZL-Getriebe

ZL 331

ir	n_1 = 2800 min^{-1}				n_1 = 1400 min^{-1}				n_1 = 900 min^{-1}				n_1 = 500 min^{-1}				Kg
	n_2 min^{-1}	T_{2M} Nm	P kW	RD %	n_2 min^{-1}	T_{2M} Nm	P kW	RD %	n_2 min^{-1}	T_{2M} Nm	P kW	RD %	n_2 min^{-1}	T_{2M} Nm	P kW	RD %	
1	2800	2.0	0.63	95	1400	2.4	0.37	95	900	2.6	0.26	95	500	2.9	0.16	95	0.3
2	—	—	—	—	700	1.1	0.08	95	450	1.2	0.06	95	250	1.3	0.04	95	

ZL 332

ir	n_1 = 2800 min^{-1}				n_1 = 1400 min^{-1}				n_1 = 900 min^{-1}				n_1 = 500 min^{-1}				Kg
	n_2 min^{-1}	T_{2M} Nm	P kW	RD %	n_2 min^{-1}	T_{2M} Nm	P kW	RD %	n_2 min^{-1}	T_{2M} Nm	P kW	RD %	n_2 min^{-1}	T_{2M} Nm	P kW	RD %	
1	2800	7.7	2	95	1400	8.6	1.3	95	900	9.2	0.91	95	500	10.0	0.55	95	1.2
2	—	—	—	—	700	5.0	0.39	95	450	5.3	0.26	95	250	5.6	0.15	95	

ZL 333

ir	n_1 = 2800 min^{-1}				n_1 = 1400 min^{-1}				n_1 = 900 min^{-1}				n_1 = 500 min^{-1}				Kg
	n_2 min^{-1}	T_{2M} Nm	P kW	RD %	n_2 min^{-1}	T_{2M} Nm	P kW	RD %	n_2 min^{-1}	T_{2M} Nm	P kW	RD %	n_2 min^{-1}	T_{2M} Nm	P kW	RD %	
1	2800	20	10.2	95	1400	25	3.9	95	900	27	2.7	95	500	30	1.6	95	3.5
2	—	—	—	—	700	21	1.6	95	450	22	1.1	95	250	23	0.63	95	

ZL 334

ir	n_1 = 2800 min^{-1}				n_1 = 1400 min^{-1}				n_1 = 900 min^{-1}				n_1 = 500 min^{-1}				Kg
	n_2 min^{-1}	T_{2M} Nm	P kW	RD %	n_2 min^{-1}	T_{2M} Nm	P kW	RD %	n_2 min^{-1}	T_{2M} Nm	P kW	RD %	n_2 min^{-1}	T_{2M} Nm	P kW	RD %	
1	2800	33	10.2	95	1400	42	6.5	95	900	46	4.6	95	500	53	2.9	95	5.7
2	—	—	—	—	700	37	2.9	95	450	39	1.9	95	250	41	1.1	95	

ZL 432

ir	n_1 = 2800 min^{-1}				n_1 = 1400 min^{-1}				n_1 = 900 min^{-1}				n_1 = 500 min^{-1}				Kg
	n_2 min^{-1}	T_{2M} Nm	P kW	RD %	n_2 min^{-1}	T_{2M} Nm	P kW	RD %	n_2 min^{-1}	T_{2M} Nm	P kW	RD %	n_2 min^{-1}	T_{2M} Nm	P kW	RD %	
1	2800	5.7	1.8	95	1400	8.4	1.3	95	900	8.9	0.88	95	500	12.4	0.68	95	2.0
2	—	—	—	—	700	10.2	0.79	95	450	11.5	0.57	95	250	13.9	0.38	95	

ZL 433 - ZL 434

ir	n_1 = 2800 min^{-1}				n_1 = 1400 min^{-1}				n_1 = 900 min^{-1}				n_1 = 500 min^{-1}				Kg
	n_2 min^{-1}	T_{2M} Nm	P kW	RD %	n_2 min^{-1}	T_{2M} Nm	P kW	RD %	n_2 min^{-1}	T_{2M} Nm	P kW	RD %	n_2 min^{-1}	T_{2M} Nm	P kW	RD %	
1	2800	15.3	4.7	95	1400	21.7	3.4	95	900	25.1	2.5	95	500	31	1.7	95	4.5
2	—	—	—	—	700	24.7	1.9	95	450	26	1.3	95	250	29.6	0.82	95	

F

N.B.
Nel caso del rapporto ir = 2 non usare il rinvio in moltiplicazione (cioè entrando dall'albero B o C) oltre 700 giri al minuto.

N.B.
If you require a ir ratio = 2, do not use a speed multiplier (i.e. with inputs on shaft B or C) which operates at more than 700 rpm.

N.B.
Falls die Getriebe als Übersetzungsgetriebe (ins Schnelle) verwendet werden sollen, ist darauf zu achten, dass die Antriebsdrehzahl an der welle B oder C 700 Upm nicht überschreiten darf.

1.7 Dimensioni *1.7 Dimensions* 1.7 Abmessungen

ZL 331

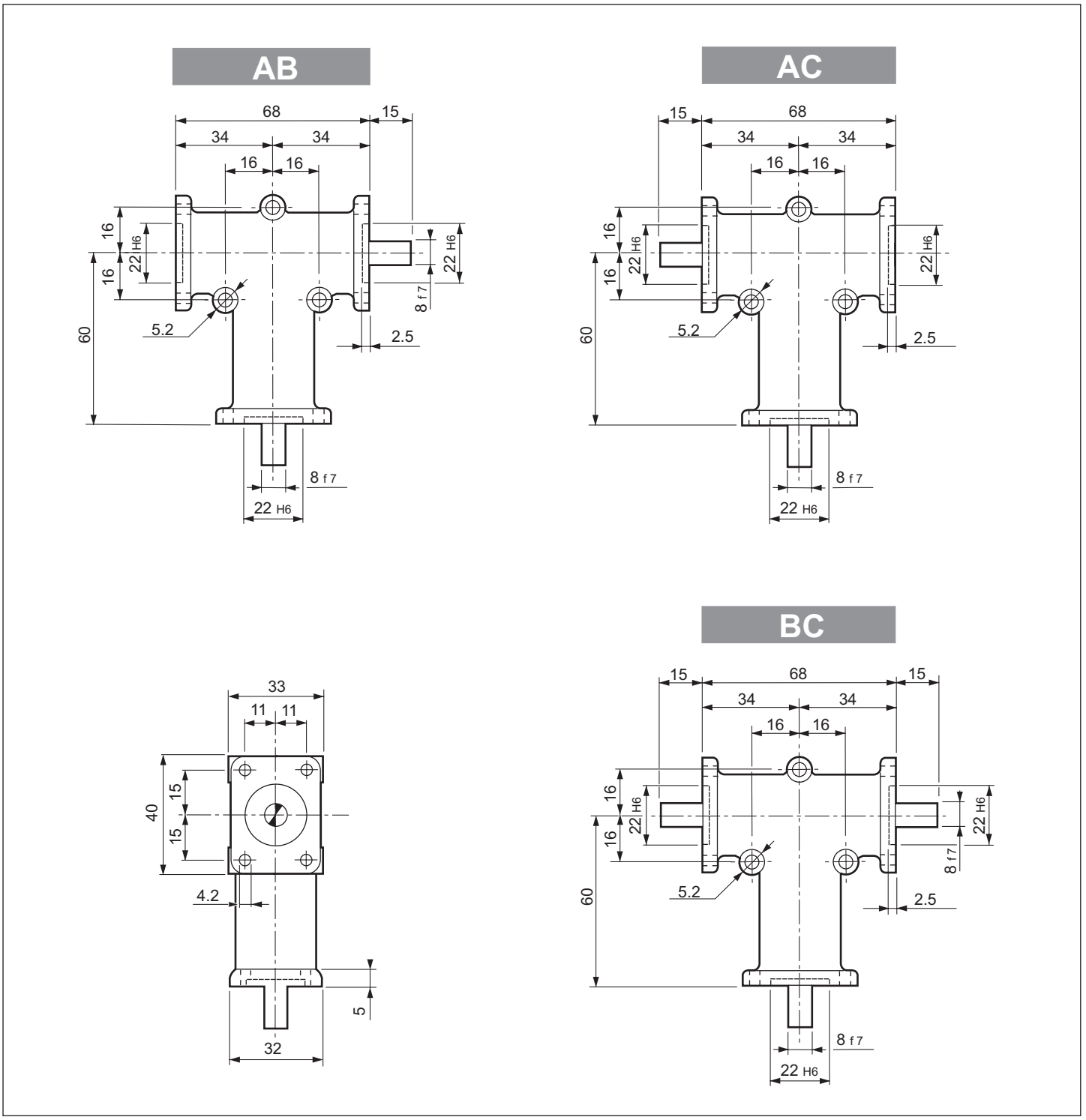

1.7 Dimensioni *1.7 Dimensions* 1.7 Abmessungen

ZL 332 - ZL 333 - ZL 334

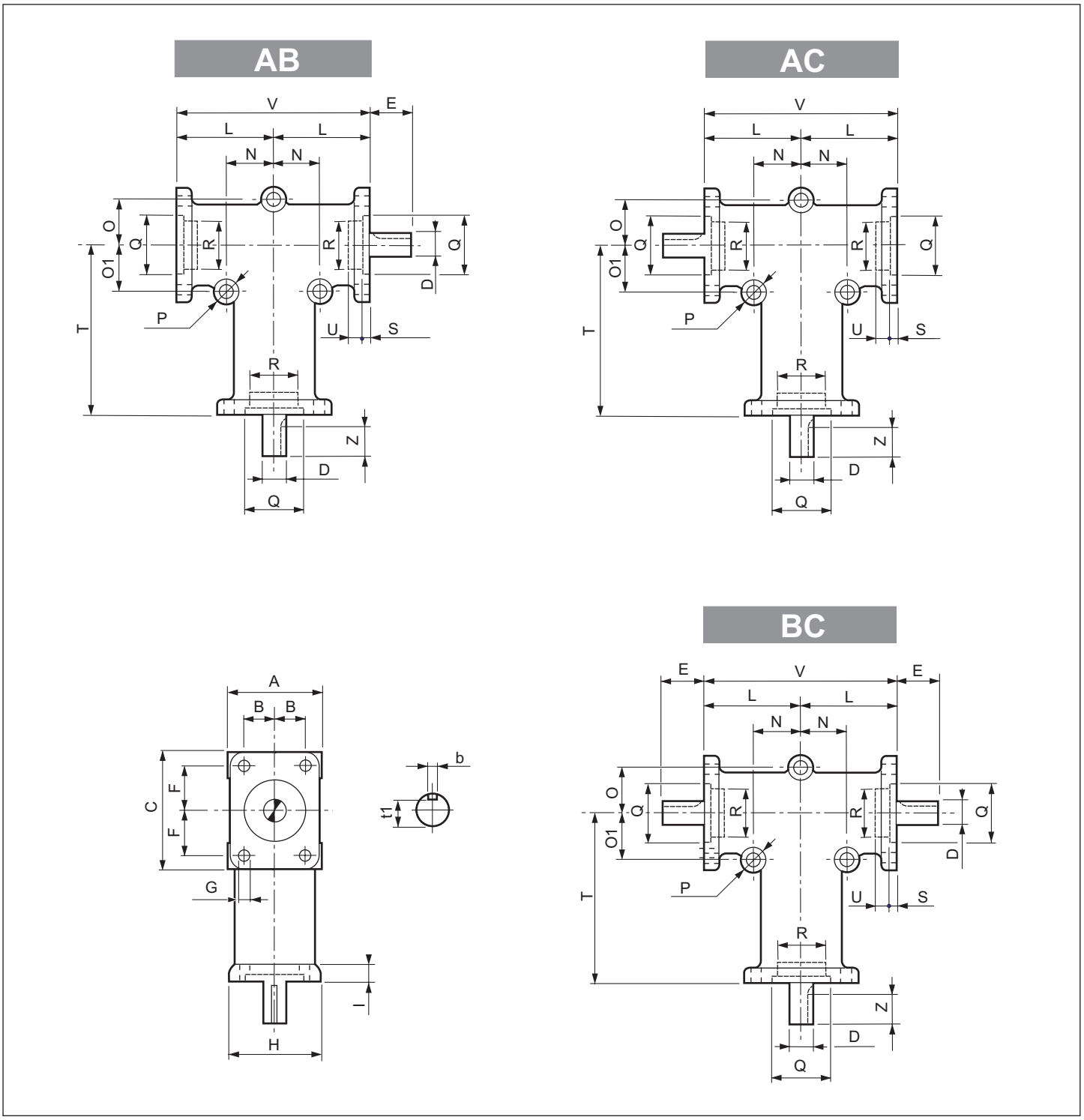

	A	B	C	D f7	b	t1	E	F	G	H	I	L	N	O	O1	P	Q H6	R H6	S	T	U	V	Z
ZL 332	52	18	66	15	5	12	35	26	6.2	50	7	52	24	24	24	8.3	35	–	5	90	–	104	27
ZL 333	76	27	96	20	6	16.5	50	38	8.3	74	8	75	38	38	38	8.3	55	52	3.5	140	5	150	40
ZL 334	100	38	98	25	8	21	70	38	10.3	98	13	80	45	45	70	10.3	65	62	3.5	150	2	160	60

1.7 Dimensioni *1.7 Dimensions* 1.7 Abmessungen

ZL 432

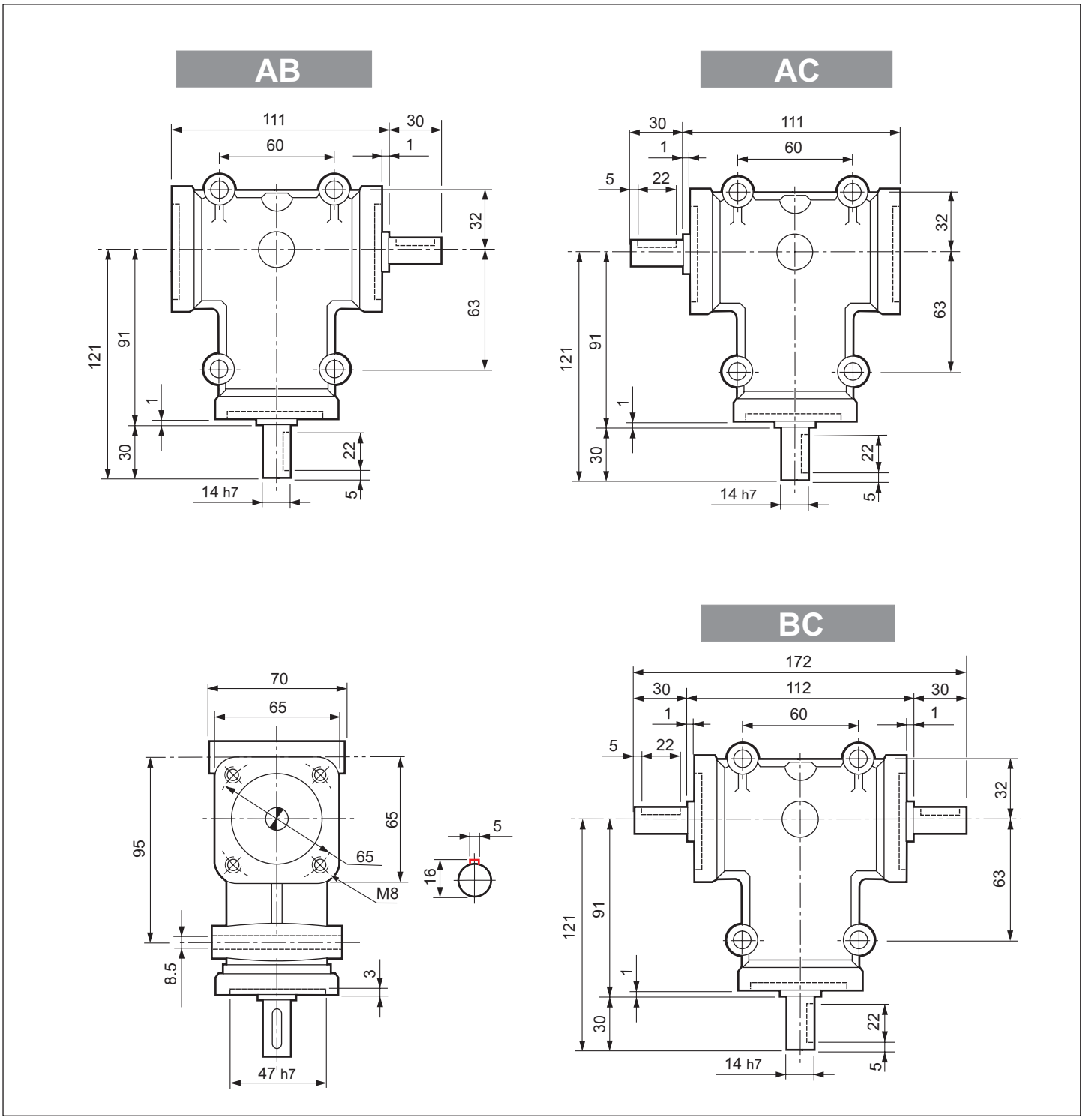

1.7 Dimensioni *1.7 Dimensions* 1.7 Abmessungen

ZL 433 - ZL 434

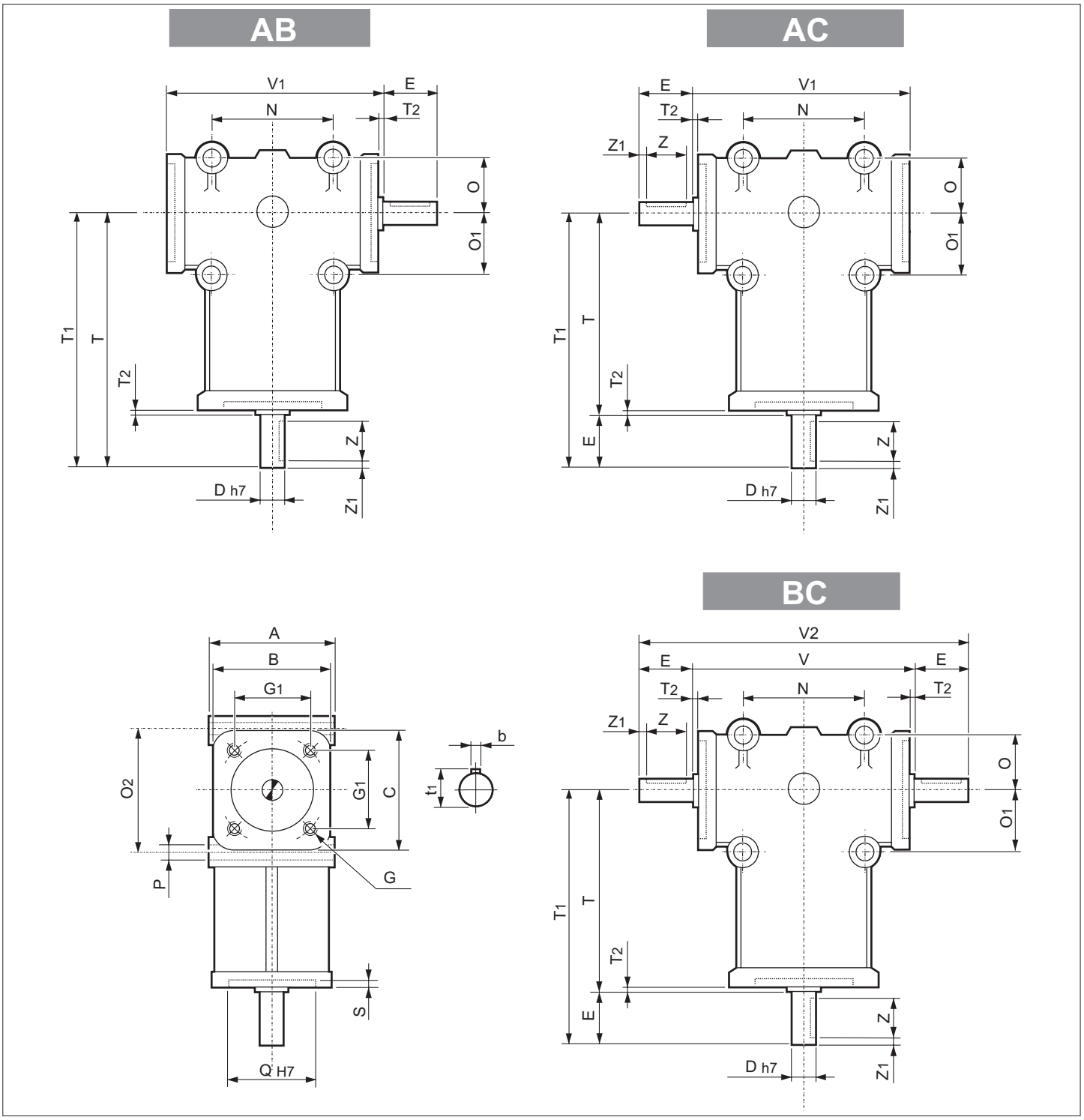

	A	B	C	D f7	E	G	G1	N	O	O1	O2	P	Q H6	S	T	T1	T2	V	V1	V2	Z	Z1	b	t1
ZL 433	86	84	84	19	40	M10	60	86	43	43	86	11	62	5	141	181	1	152	151	232	30	5	6	21.5
ZL 434				24	50																		8	27

1.0 VARIATORI MECCANICI WM
1.0 MECHANICAL VARIATORS WM
1.0 MECHANISCHEN VERSTELLGETRIEBE WM

WM

1.1	Caratteristiche tecniche	*Technical characteristics*	Technische Eigenschaften	H1
1.2	Designazione	*Designation*	Bezeichnungen	H2
1.2	Versioni	*Versions*	Ausführungen	H3
1.4	Lubrificazione	*Lubrication*	Schmierung	H4
1.7	Prestazioni motoriduttori	*Gearmotors performances*	Leistungen der Getriebemotoren	H5
1.8	Dimensioni	*Dimensions*	Abmessungen	H6
1.9	Accessori	*Accessories*	Zubehör	H8

1.1 Caratteristiche tecniche

Le principali caratteristiche costruttive e funzionali di questo prodotto,che ne aumentano la versatilità, sono la flangia attacco motore integrale alla carcassa e la struttura completamente modulare per quanto concerne la flangia uscita ed i piedi: queste peculiarità consentono di ridurre gli ingombri e le scorte a magazzino aumentandone la flessibilità e l'economicità complessiva.

1.1 Technical characteristics

The main costruction and functional features of this product, that increase its versatility, are the integral motor flange to the housing and the completely modular structure for the output flange and the feet: these features allow to reduce the dimensions and the stock warehouse improving and increasing the flexibility and overall economicity.

1.1 Technische Eigenschaften

Die wichtigsten strukturellen und funktionellen Eigenschaften des Produkts, die seine Vielseitigkeit erhöhen, sind der fest mit dem Gehäuse verbundene Motorflansch und der modulare Aufbau des Abtriebsflansches und den Füßen. Diese Merkmale ermöglichen eine kompakte Bauweise und reduzieren die Lagerbestände erheblich. Eine hohe Flexibilität und eine hohe Wirtschaftlichkeit sind die daraus resultierenden Vorteile.

1.1 Caratteristiche tecniche

I variatori meccanici STM sono riduttori epicicoidali a bagno d'olio, in cui è possibile variare con continuità la velocità in uscita, mediante volantino di manovra.

1.1 Technical characteristics

S.T.M. mechanical variators are oil lubricated planetary gearboxes, with possibility to change continuously the output speed with a manoeuvring hand-wheel.

1.1 Technische Eigenschaften

Die mechanischen Verstellgetriebe aus dem Hause STM sind Planetenuntersetzungs- getriebe mit Ölbad, bei denen die Abtriebsgeschwindigkeit mit einem Handrad kontinuierlich verändert werden kann.

1	Albero di uscita	Output shaft	Abtriebswelle
2	Portasatelliti	Planet support	Planetenträger
3	Boccola scorrevole	Slide block	verschiebbares Achslager
4	Pista di regolazione	Regulating orbit	Einstellspur
5	Anello portasfere	Ball ring	Kugelhalter Ring
6	Pista mobile esterna	Moving outer planetary orbit	Bewegliche äußere Spur
7	Satellite	Planet wheel	Planetenrad
8	Scatola di comando	Operating box	Bedien- Steuergerät
9	Pista fissa esterna	Fixed outer planetary orbit	Feste äußere Spur
10	Pista fissa interna	Fixed inferior planetary orbit	Feste innere Spur
11	Pista mobile interna	Moving inferior planetary orbit	Bewegliche innere Spur
12	Molle a tazza	Butterfly spring	Tellerfedern

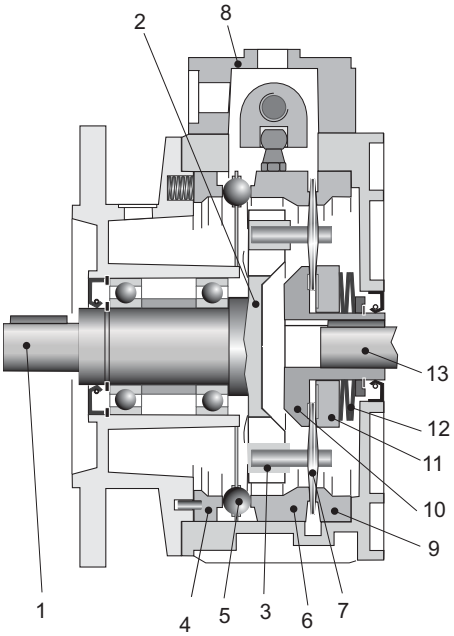

Caratteristiche di funzionamento

- Campo di regolazione continuo con rapporto di trasmissione rispetto alla velocità di entrata tra 1: 1.4 e 1: 8.2.
- Funzionamento silenzioso ed esente da vibrazioni.
- Possibili entrambi i sensi di rotazione, con movimento entrata e uscita concorde.
- Costanza di velocità al n° di giri max: ± 0.5%
- Costanza di velocità al n° di giri min: ±1%
- Rendimento elevato pari a circa 84% alla velocità max.

La variazione dei giri deve essere assolutamente eseguita a motore in moto.

Operating characteristics

- *Continuous regulation field with transmission ratio between 1:1.4 and 1:8.2 with respect to the input speed.*
- *Silent functioning and free from vibrations.*
- *Available both directions of rotation, with simultaneous input and output movement.*
- *Speed uniformity: ± 0.5 % at maximum speed.*
- *Speed uniformity: ± 1 % at minimum speed.*
- *High efficiency: 84% at maximum speed.*

Speed can be change only when the unit is running

Betriebseigenschaften

- Stufenloser Einstellbereich mit Untersetzungs-verhältnissen gegenüber von 1:1.4 bis 1:8.2.
- Ruhiger und schwingungsfreier Lauf.
- Beide Drehrichtungen möglich, die Antriebsentspricht der Abtriebsdrehrichtung.
- Gleichlaufschwankung bei Maximaldrehzahl: ± 0.5%.
- Gleichlaufschwankung bei Minimaldrehzahl: ± 1%
- Hoher Wirkungsgrad entsprechend ca. 84% bei max. Drehzahl.

Die Änderung der Geschwindigkeit muss unbedingt bei laufendem Motor durchgeführt werden.

1.2 Designazione

1.2 Designation

1.2 Bezeichnung

WEB: Reference Designation

Maschine	Output Flange	Size	Input Shaft	Designazione Motori *Designation Motors* Bezeichnung Motoren	Mounting positions	Position Terminal Box
00 M	01 OF	02 SIZE	03 IS		04 MP	06 PMT

CODE: Example of order: "WM F1 63 N"

WM	F1 P/F1	63 N*	63B5 ... 100B5	—	M1 M2 M3	1 2 3 4
		71 N*				
		80 N*				
		90 N*	—	Look *CT 18*		
		100 N*				
		112 N*	—			
		132 N*				

*** New Series**

1.2 Designazione

1.2 Designation

1.2 Bezeichnung

00 M - Macchina

M - Maschine

M - Getriebe

WM

01 OF - Flangia Uscita

OF - Output Flange

OF - Flansche am Abtrieb

F1

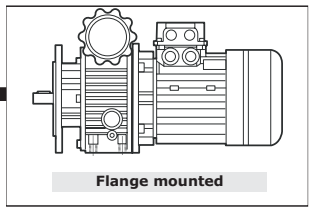

Variatore con flangiaa
Variator with flange
Verstellgetriebe mit Flansch

P/F1

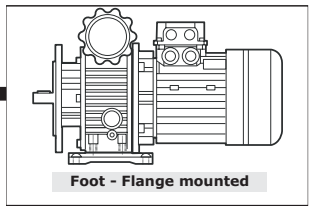

Variatore con flangia e piedi riportati
Variator with flange and modular feet
Verstellgetriebe mit eingesetzten Modularstützen und Flansch

Elenco versioni
Versions
Ausführungen

Il volantino viene fornito non montato per non incorrere in possibili danneggiamenti del prodotto; sarà cura dell'installatore posizionarlo sul lato desiderato.

The handwheel is supplied not assembled to prevent transportation damages. Installer will then assemble it on the requested side.

Das Handrad wird geliefert nicht montiert um Transportschaden zu vermeiden. Der Installateur wird dann auf dir gewüenschte Seite es montieren.

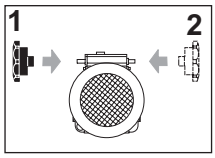

Posizione volantino
Hand-wheel position
Position Handrad

02 SIZE - Grandezza

SIZE - Size

SIZE - Größe

63 N*	71 N*	80 N*	90 N*	100 N*	112 N*	132 N*

*** New Series**

03 IS - Albero Entrata

IS - Input shaft

IS - Antriebswelle

Motovariatori :
Il motore è applicato direttamente.
La forma del motore è B5 per tutte le grandezze.

Motor variator:
The motor is directly coupled to variator.
Motor mounting position used for all sizes is B5.

Verstellgetriebemotor:
Der Motor ist direkt gekuppelt.
Für alle Baugrößen wird die Bauform B5 verwendet.

04 MP - Posizioni di montaggio

[M2, M3, M4] Posizioni di montaggio con indicazione dei tappi di livello, carico e scarico; se non specificato si considera standard la posizione **M1** (vedi par. 1.4)

MP - Mounting positions

[M2, M3, M4] *Mounting position with indication of breatherm level and drain plugs; if not specified, standard position is* ***M1*** *(see par. 1.4).*

MP - Einbaulagen

Montageposition **[M2, M3, M4]** mit Angabe von . Entlüftung, Schaugläsern und Ablaßschraube. Wenn nicht näher spezifiziert, wird die Standard - position **M1** zugrunde gelegt (s. Abschnitt 1.4).

05 OPT-ACC. - Opzioni

OPT-ACC - Options

OPT-ACC. - Optionen

vedi par. 1.9 see pa. 1.9 s. Abschnitt 1.9	**ACC9**	**IND_GRAV**	Indicatore Gravitazionale	Gravitational Iindicator	Anzeiger auf Schwerkraftbasis
vedi Sezione A-1.12 see Section A-1.12 s. Abschnitt A-1.12	**OPT.**	**OPT**	Materiale degli anelli di tenuta	Materials of Seals	Dichtungsstoffe
		OPT1	Stato fornitura olio	Scope of the supply - Options - OIL	Optionen - Lieferzustand - Optionen - Öl
		OPT2	Verniciatura	Painting and surface protection	Lackierung und Oberflächenschutzl

06 PMT - Posizioni della Morsettiera

PMT - Position Terminal Box

PMT - Montagposition Klemmenkasten

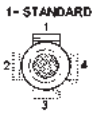

[2, 3, 4] Posizione della morsettiera del motore se diversa da quella standard (1).

[2, 3, 4] *Position of the motor terminal box if different from the standard one (1).*

Montageposition Klemmenkasten **[2, 3, 4],** wenn abweichend von Standardposition [1] (für Motorgetriebe).

1.4 Lubrificazione

I principio di funzionamento di questi variatori è quello di trasmettere la coppia attraverso ruote di frizione: ciò comporta la scelta di un particolare tipo di lubrificante, capace di migliorare il rendimento e la durata dei componenti.
Il cinematismo che compone il variatore è esclusivamente metallico e necessita di una lubrificazione costante. La lubrificazione del variatore avviene per sbattimento o proiezione dell'olio.
Per il piazzamento del variatore sulla macchina da comandare, eseguire le seguenti verifiche:

1) Indivuata la posizione di montaggio, predisporre i tappi di carico, scarico, sfiato e livello.

2) Assicurarsi che l'olio sia visibile fino a metà livello a variatore fermo, se ciò non avviene, rabboccare l'olio fino a riportarlo al giusto livello.
La sostituzione dell'olio deve avvenire dopo le prime 100 ore di funzionamento e successivamente ogni 1000 ore, assicurandosi in ogni caso che l'olio sia sempre visibile fino a metà dei tappi di livello.

1.4 Lubrication

The operation principle of these variators consists of torque transmission by friction wheel; that means choosing a particular kind of oil, able to increase the dynamic efficiency and guarantee longer components' duration.
All moving parts of variator are made of metal, and require a constant lubrication.
This is achieved by oil splash or jet.
During installing on the driven machine, make the following checks:

1) Once the mounting position has been established, arrange the filler plug, drain plug, breather and level plugs.

2) Make sure the oil is visible up to half way up the level indicator plug when the variator is at a stand still. If this is not the case, top up with oil until this level is reached.
The oil must be changed after the first 100 hours of duty and after that every 1000 hours. Always check variator is filled to half way up the level plug after changing the oil.

1.4 Schmierung

Das Betrieb- sprinzip dieser Verstellgetriebe besteht in der Übertragung des Drehmoments über Kupplungsräder. Daher ist eine besondere Wahl des Schmiermittels erforderlich, der den Wirkungsgrad sowie die Lebensdauer der Bestandteile erhöht.
Alle beweglichen Teile des Verstellgetriebes bestehen ausschließlich aus Metall und erfordern daher eine ständige Schmierung. Die Schmierung des Verstellgetriebes erfolgt durch Tauchbad bzw. Verwirbelung.
Bei der Installation des Verstellgetriebes an der anzutreibenden Maschine sind folgende Überprüfungen auszuführen:
1) Nach der Festlegung der Montageposition werden die Füll-, Ablaß-, Entlüftungs- und Füllstandsstopfen entsprechend der Darstellung im Abschnitt 6.5 hinsichtlich der Montageposition angebracht.

2) Sicherstellen, daß das Öl bei stehendem Verstellgetriebe bis zur Hälfte des Füllstandstopfens sichtbar ist. Sollte dies nicht der Fall sein, so ist Öl nachfüllen, bis der erforderliche Stand erreicht ist.
Nach den ersten 100 Betriebsstunden und darauffolgend nach jeweils 1000 Stunden sollte ein Ölwechsel durchgeführt werden. Jedesmal sollte sichergestellt werden, daß das Öl bis zur Hälfte der Füllstandsstopfen sichtbar ist.

Posizioni di montaggio
Mounting positions
Montagepositionen

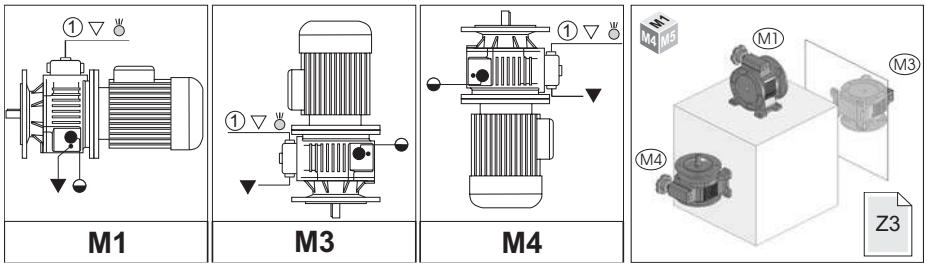

▽ Carico/*Breather plug*/Einfüll-u. Entlüftungsschraube
◒ Livello/*Level plug*/Schauglas
▼ Scarico/*Drain plug*/ Ablaßschraube
Sfiato/*Vent pung* / Entlüftungsstopfen

	Posizioni di montaggio - Mounting positions - Montagepositionen		
WM		Posizioni Positions Positionen	Prescrizioni da indicare in fase d'ordine Ordering requirements Anforderungen bei der Bestellung
	63-71-80-90 100-112-132	**M1-M2 M3-M4 M5-M6**	**Necessaria Necessary Erforderlich**

TARGHETTA - RIDUTTORE

NON NECESSARIA
Indicata sempre nella targhetta del riduttore la posizione di montaggio "M1".

NECESSARIA
La posizione richiesta è indicata nella targhetta del riduttore

Identification Plate - Gearbox

NOT NECESSARY
The mounting position is always indicated on the nameplate "M1".

NECESSARY
The indication it on the label of the gearbox

Typeschild - Getriebe

NICHT ERFORDERLICH
Die Einbaulage ist immer auf dem Typenschild angegeben "M1".

ERFORDERLICH
Findet man die angefragte Position auf dem Typenschild des Getriebe

1.4 Lubrificazione

1.4 Lubrication

1.4 Schmierung

Lub	Quantità di lubrificante - *Lubricant Quantity - Schmiermittelmenge - [Kg]*				OPT1	Tappi-Plug-Stopf		
		M1	M2	M3		N°	Diameter	Type
WM	63 N	0.060	0.250	0.200	INOIL_STD	6	On request	
	71 N	0.100	0.400	0.200		6		
	80 N	0.200	0.600	0.350		6		
	90 N	0.550	1.250	0.900		6		
	100 N	1.100	2.100	1.400		6		
	112 N	1.100	2.100	1.400		6		
	132 N	3.500	5.000	5.000		6		

Quantità indicative; durante il riempimento attenersi alla spia di livello.

Qualora fosse stato ordinato il variatore nella posizione **M1** e si voglia installarlo nelle posizioni **M3** e **M4** è necessario:
1 – Montare **il tappo N° 1** nella posizione corretta indicata;
2 – Aggiungere lubrificante come da tabella..

Attentione !:
Il tappo N° 1 è sempre montato in modo conforme alla posizione di montaggio ordinata e permettere lo "sfiato" dell'aria durante il funzionamento del variatore.
Il tappo è stato serrato in modo da impedire perdite di lubrificante in fase di spedizione.
E' indispensabile prima della messa in servizio del variatore allentare "leggermente" il tappo in modo tale da consentire allo stesso di assolvere la funzione di sfiato.

Nota: Se in fase d'ordine la posizione di montaggio è omessa, il riduttore verrà fornito con i tappi predisposti per la posizione M1.

Indicative quantities, check the oil sight glass during filling.

Should the unit have been ordered in position M1 and you wish to install it in positions M3 and M4 it is necessary :1.to assemble the plug No.
1 - in the appropriate position as indicated
2 - to add lubricant as specified in relevant chart.

Warning!:
N1 plug is always assembled in full conformity with the mounting position of the mechanical speed variator and to ensure proper'' air breathing '' during operation.
The plug has been previously tightened enough to prevent lubricant leakages which might take place during the transportation.
Before operating the unit just '' slightly '' loosen the plug enough to allow proper breathing.

Note: If the mounting position is not specified in the order, the worm gearbox supplied will have plugs pre-arranged for position M1.

Richtungsweisende Mengen, bei der Auffüllung auf das Füllstand-Kontrollfenster Bezug nehmen.

Wenn er in der Position M1 bestellt wurde und jedoch in den Positionen M3 und M4 installiert werden soll, ist folgendes notwendig:
1 - Montieren Sie den Verschluß N 1 in der richtigen Position wie angegeben;
2 – Fügen Sie gemäß der Übersicht das Schmiermittel hinzu.

Achtung!:
Der Verschluss N 1 ist immer entsprechend der bestellten Einbauposition montiert und läßt einen Luftaustausch während des Betriebes des Getriebes zu.
Der Verschluss wurde festgestellt, um Leckagen während des Transports zu verhindern.
Deshalb muß unbedingt vor Inbetriebnahme des Getriebes der Verschluß "leicht" gelöst werden, um die Atmungsfunktion zu ermöglichen.

Anmerkung:Sollte in der Auftragsphase die Einbaulage nicht angegeben werden, wird das Getriebe mit Stopfen für die Einbaulage M1.

1.7 Prestazioni

1.7 Performances

1.7 Leistungen

P_1	IRmin	IRmax	n_1	n_2		T_2 [Nm]		WM	Kg
[kW]	—	—	min^{-1}	max	min	max (n_{2min})	min (n_{2max})		
0.18	1.60	8.20	1400	880	170	3.0	1.5	**WM 63 N**	**1.8**
0.25	1.40	7.00	1400	1000	200	6.0	2.0	**WM 71 N**	**3.7**
0.37	1.40	7.00	1400	1000	200	6.0	3.0	**WM 71 N**	**3.7**
0.55	1.40	7.00	1400	1000	200	12.0	4.4	**WM 80 N**	**6.5**
0.75	1.40	7.00	1400	1000	200	12.0	6.0	**WM 80 N**	**6.5**
1.10	1.40	8.20	1400	1000	170	18.0	9.0	**WM 90 N**	**30**
1.50	1.40	8.20	1400	1000	170	24.0	12.0	**WM 90 N**	**30**
2.20	1.40	7.00	1400	1000	200	36.0	18.0	**WM 100 N**	**60**
3.00	1.40	7.00	1400	1000	200	48.0	24.0	**WM 100/112 N**	**60**
4.00	1.40	7.00	1400	1000	200	64.0	32.0	**WM 112 N**	**60**
5.50	1.40	7.00	1400	1000	200	90.0	45.0	**WM 132 N**	**100**
7.50	1.40	7.00	1400	1000	200	118.0	59.0	**WM 132 N**	**100**

1.8 Dimensioni *1.8 Dimensions* 1.8 Abmessungen

F1

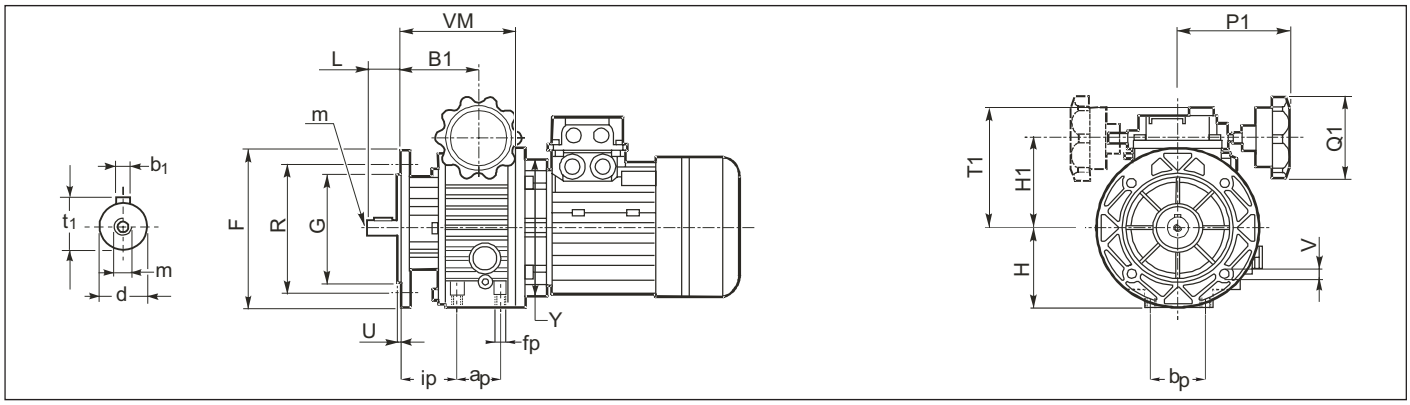

WM	F	G	R	T1	U	V	B1	H1	L	P1	Q1	VM	Y
63	140	95	115	113	3.5	9	64	78	23	113	70	111.5	140
71	160	110	130	125	3.5	9	71.5	91	30	113	70	108	160
80	200	130	165	142	3.5	11	87.5	107	40	120	85	143.5	200
90	200	130	165	148	3.5	11	106.5	127	50	140	85	174	200
100	250	180	215	181	4	15	131	158	60	150	120	222	250
112	250	180	215	181	4	15	131	158	60	150	120	222	250
132	300	230	265	218	4	19	130	193	80	182	120	263	300

WM	H		ap	bp	fp	ip		d	b1	m	t1
63	70		50	60	M6	46		11	4	M5	12.5
71	80		40	77	M8	51.5		14	5	M5	16
80	100		58	84	M8	62		19	6	M6	21.5
90	111		62	200	M8	80		24	8	M8	27
100	136		80	224	M8	100		28	8	M8	31
112	136		80	224	M8	100		28	8	M8	31
132	185		-	-	-	-		38	10	M10	41

1.8 Dimensioni *1.8 Dimensions* 1.8 Abmessungen

P / F1

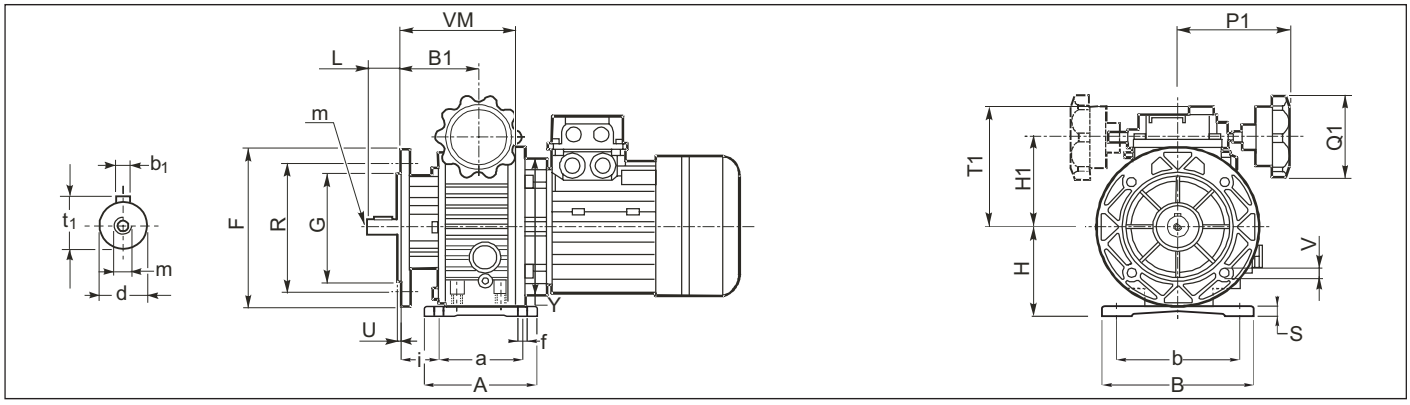

WM	F	G	R	T1	U	V	B1	H1	L	P1	Q1	VM	Y
63	140	95	115	113	3.5	9	64	78	23	113	70	111.5	140
71	160	110	130	125	3.5	9	71.5	91	30	113	70	108	160
80	200	130	165	142	3.5	11	87.5	107	40	120	85	143.5	200
90	200	130	165	148	3.5	11	106.5	127	50	140	85	174	200
100	250	180	215	181	4	15	131	158	60	150	120	222	250
112	250	180	215	181	4	15	131	158	60	150	120	222	250
132	300	230	265	218	4	19	130	193	80	182	120	263	300

WM	H		A	a	B	b	f	i	S		d	b1	m	t1
63	80		120	105	145	110	9	18.5	10		11	4	M5	12.5
71	93		125	104	149	120	9	19.5	10		14	5	M5	16
80	115		150	125	190	160	11	27	15		19	6	M6	21.5
90	125		170	140	230	180	13	50	18		24	8	M8	27
100	150		270	230	300	245	14	24.5	25		28	8	M8	31
112	150		270	230	300	245	14	24.5	25		28	8	M8	31
132	-		-	-	-	-	-	-	-		38	10	M10	41

1.9 OPT - ACC. - Accessori - Opzioni

IND_GRAV **IND_GRAV - Indicatore Gravitazionale**

1.9 OPT - ACC. - Accessories - Options

IND_GRAV - Gravitational lindicator

1.9 OPT - ACC. Zubehör - Optionen

IND_GRAV - Anzeiger auf Schwerkraftbasis

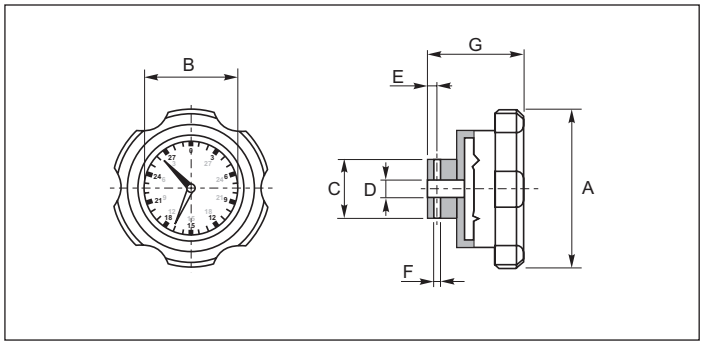

Grandezza Size Baugröße	A	B	C	D	E	F	G
63	84	57	25	10	5	3	51
71	84	57	25	10	5	3	51
80	84	57	25	12	5	3	51
90	84	57	25	12	5	3	51
100	84	57	25	12	5	3	51
112	84	57	25	12	5	3	51
132	84	57	25	12	5	3	51

Questo strumento è montato direttamente sul volantino di comando del motovariatore e indica su di una scala da 0 - 2000 la posizione di regolazione del variatore
Abbiamo due tipi di indicatori gravitazionali:
Quando il volantino di comando è in posizione 1 l'indicatore ha una scala di lettura ANTIORARIA.
Quando il volantino di comando è in posizione 2 l'indicatore ha una scala di lettura ORARIA.

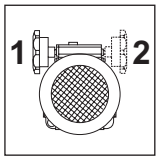

This instrument is directly installed on the hand-wheel control of the variator and it shows the regulation position of the variator on a scale from 0 to 2000.
Two types of gravitational indicators are available:
when the control hand-wheel is in position 1 (see chapter 9.5), the indicator has an anticlockwise scale;
when the control hand-wheel is in position 2 (see chapter 9.5), the indicator has a clockwise scale.

Dieses Instrument wird direkt auf dem Steuerhandrad des Verstellgetriebes montiert und zeigt auf einer Skala zwischen 0 und 2000 die Einstellposition des Verstellgetriebes an.
Es können zwei Ausführungen geliefert werden:
befindet sich das Steuerhandrad auf Stellung 1 (s. Abschn. 9.5), wird die Skala des Anzeigers im GEGENUHRZEIGERSINN abgelesen.
steht das Steuerhandrad auf Position 2 (s. bschn. 9.5), wird die Skala des Anzeigers im UHRZEIGERSINN abgelesen.

TARATURA DELL'INDICATORE GRAVITA- ZIONALE
Portare il motovariatore alla minima velocità, togliere l'indicatore dal volantino di comando e portare le due lancette dello stesso, in posizione 0, quindi rimontarlo.

CALIBRATION OF THE GRAVITATIO- NAL INDICATOR
Set the motor variator to minimum speed, take the indicator off the hand-wheel and set its two pointers to 0 position; than reassemble it.

EICHUNG DER ANZEIGE

Den Verstellgetriebemotor auf die Mindestdrehzahl herunterfahren, den Anzeiger vom Steuerhandrad abnehmen und die beiden Zeiger auf Position 0 stellen. Nachfolgend den Anzeiger wieder montieren.

Posizioni di montaggio - Lubrificazione
Mounting positions - Lubrication
Einbaulagen - Schmierung

Z

R	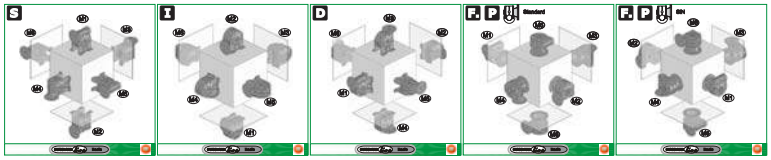	Z2
CR	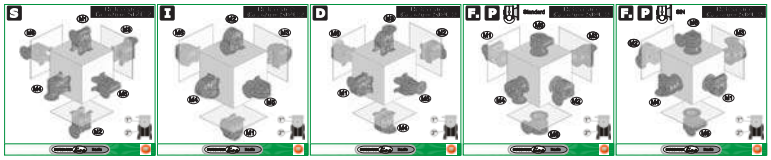	Z2
C		Z3
	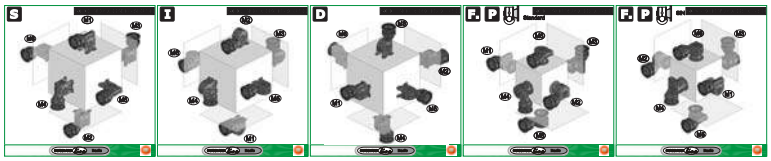	Z3
U	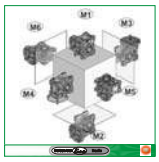	Z4
W	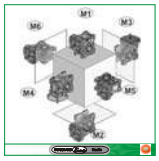	Z4
Z		Z4
WM	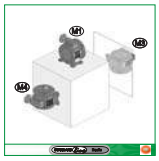	Z4

Posizioni di montaggio
Mounting positions
Montagepositionen

RI - RMI

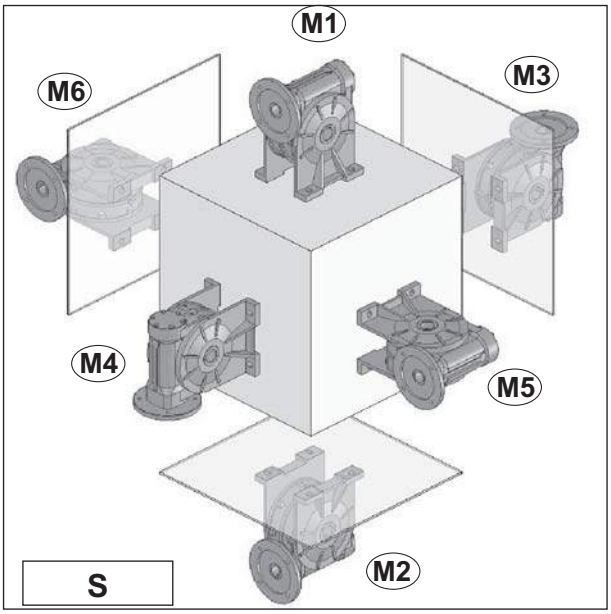

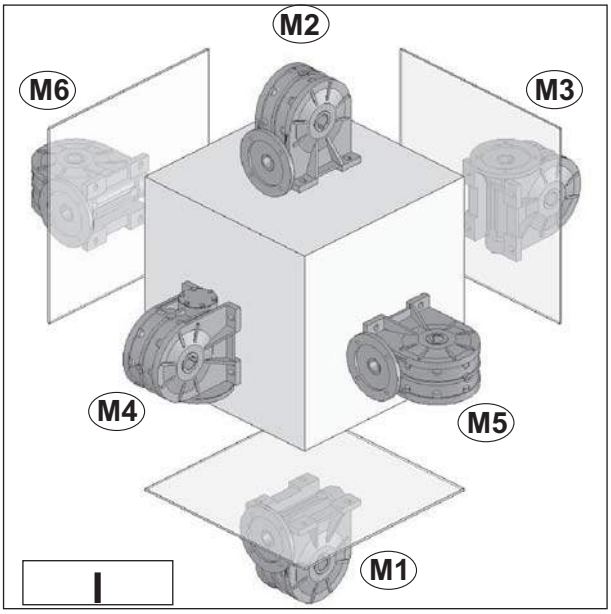

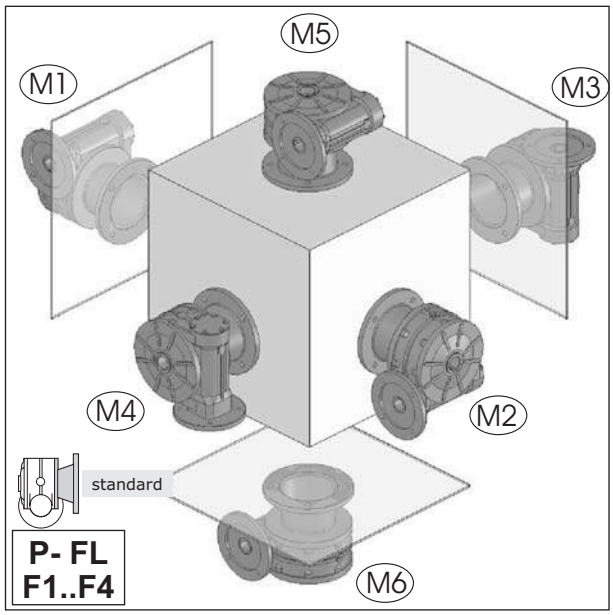

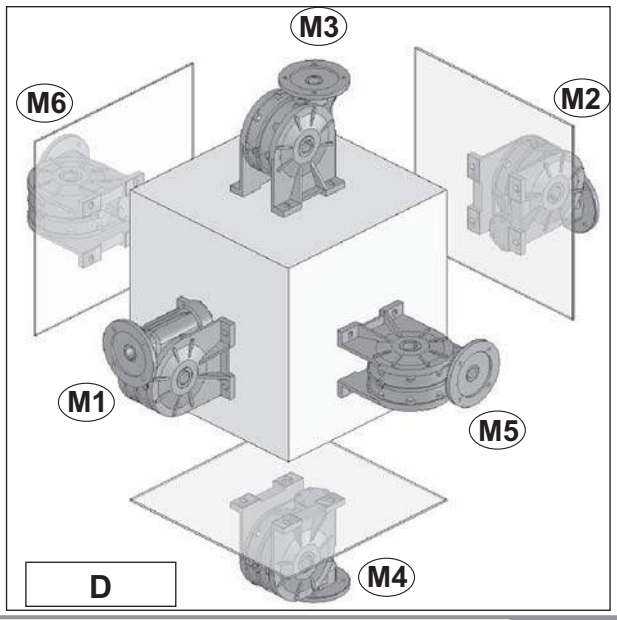

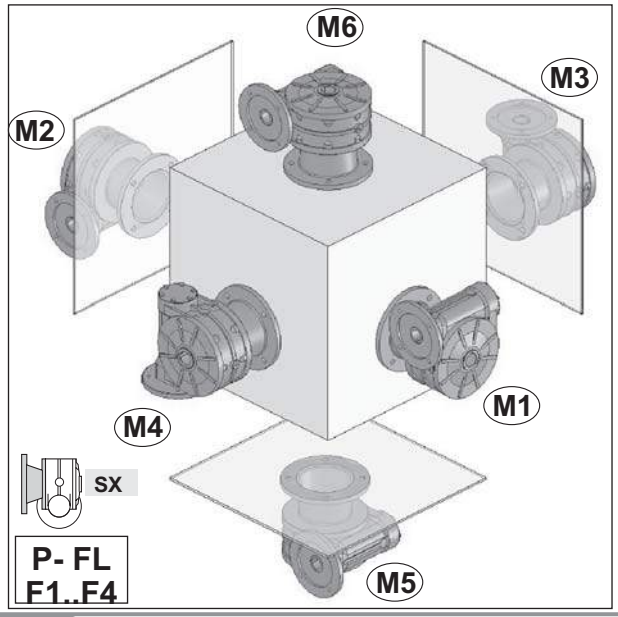

Posizioni di montaggio
Mounting positions
Montagepositionen

CR - CB

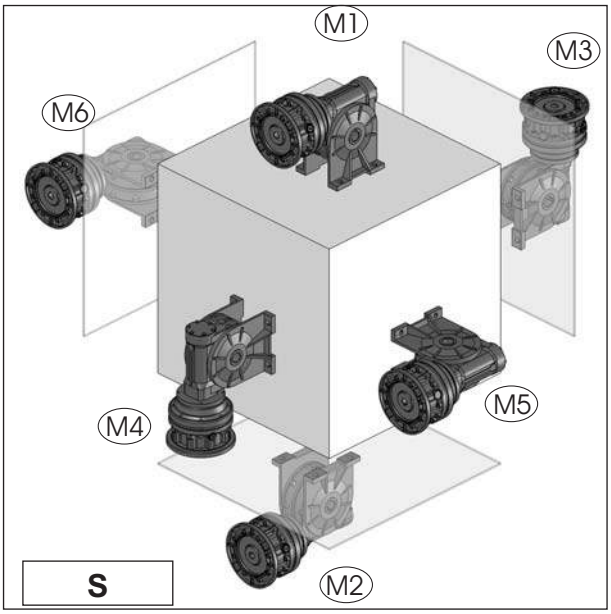

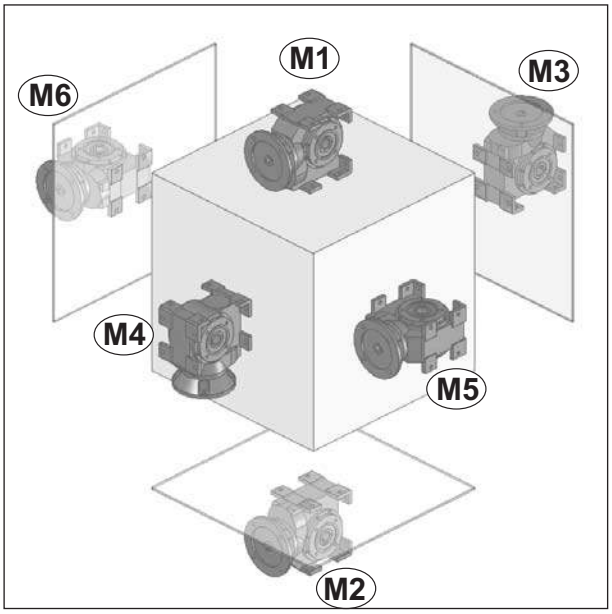

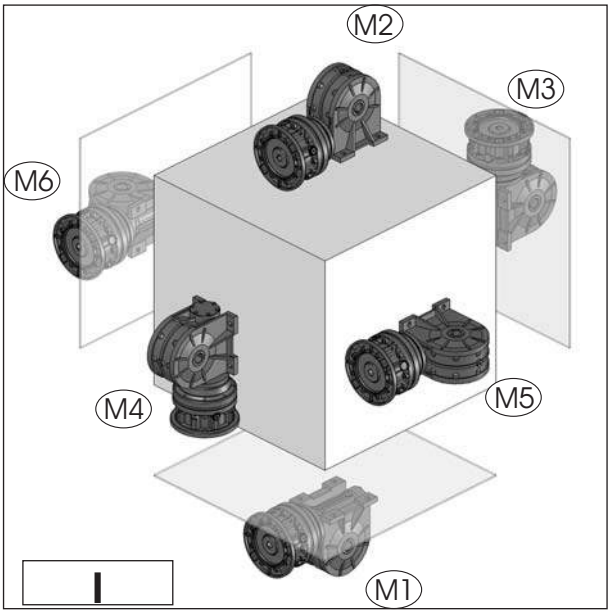

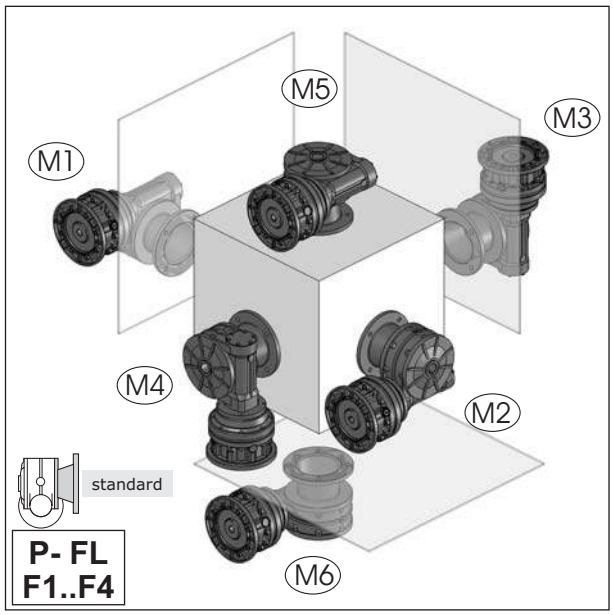

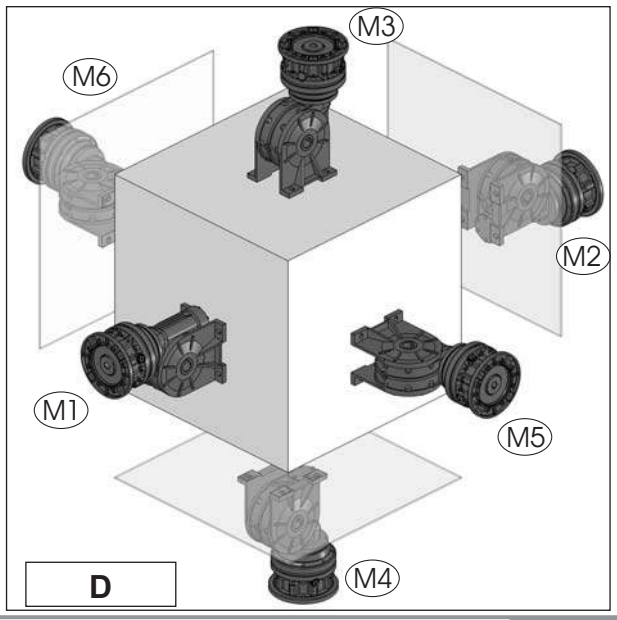

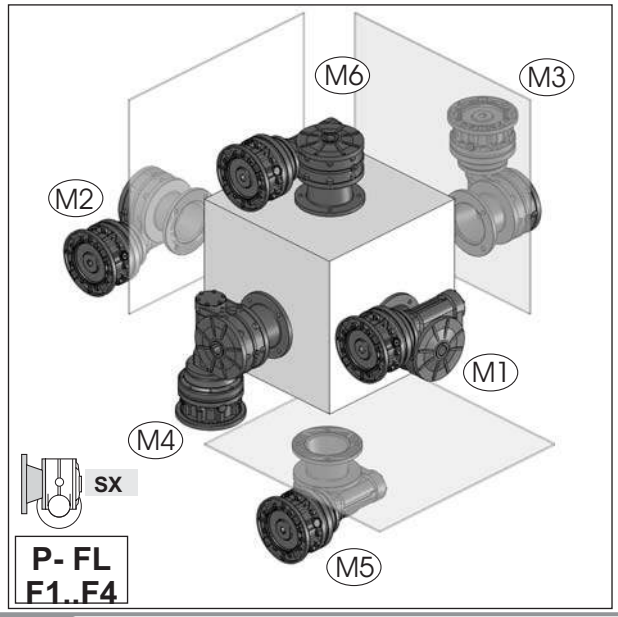

Posizioni di montaggio
Mounting positions
Montagepositionen

U - UI - UMI WI-WMI

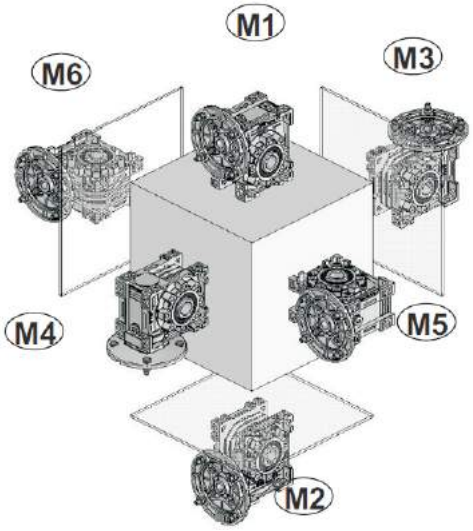

Posizioni di montaggio
Mounting positions
Montagepositionen

Z

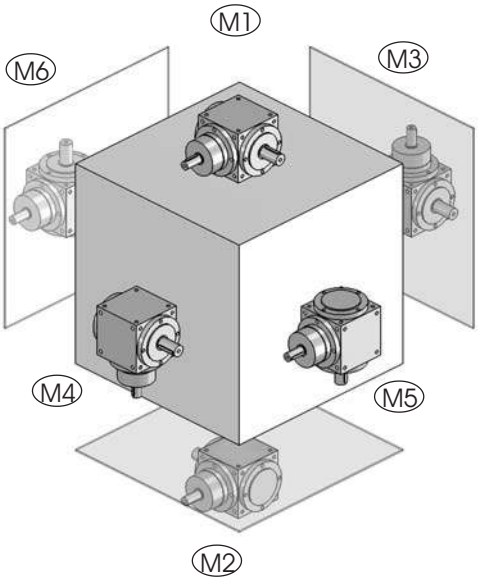

Posizioni di montaggio
Mounting positions
Montagepositionen

WM

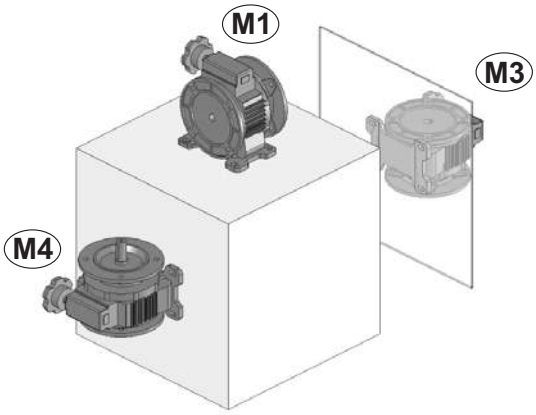

Gestione Revisioni Cataloghi STM

Managing STM Catalog Revisions

Management Wiederholt Kataloge STM

Codice Catalogo

Catalog Code

KatalogcCode

	CT16	**I**	**GB**	**D**	**3.1**	
	N° Identificativo *Identification Number* Kennummer	Identificativo Lingua - *Language* - Sprache **I** - Italiano – *Italian* - Italienisch **GB** – Inglese – *English* - Englisch **D** – Tedesco – *German* - Deutsch			Indice di Revisione *Review* Bericht	

1) Ogni catalogo STM in distribuzione e' provvisto di un codice che lo identifica che è riportato nell'ultima pagina dei cataloghi e a piè pagina di tutte le pagine del catalogo stesso.Per verificare la revisione attualmente in vostro possesso è necessario guardare l'ultima cifra che compone il codice del catalogo:

1) Each STM catalogue is identified by a code printed on the last page and reported in the page footer.The last digit in the catalogue code identifies catalogue revision:

1) Jeder, sich im Umlauf befindliche STM-Katalog ist mit einer Identifikationsnummer versehen, der auf der letzten Seite und in den Fußnoten jeder einzelnen Seite aufgeführt ist. Um zu überprüfen, über welche Revision Sie im Augenblick verfügen, müssen Sie Bezug auf die letzte Ziffer der Katalogkennnummer nehmen.

2) Il catalogo che contiene gli ultimi aggiornamenti è reperibile sul sito internet STM. Le modifiche riportate sono visibili consultando la tabella degli aggiornamenti che è allegata a questo documento. Sulle pagine che sono oggetto della modifica è riportato l'indice di revisione cambiato.

2) Latest updated catalogues are available on STM's web site. Changes are listed in the updates table attached to this document. Any pages including a change are identified by a higher revision number.

2) Der Katalog, der die letzten Aktualisierungen enthält, kann von der Internetseite der STM herunter geladen werden.Die eingefügten Neuerungen können der Tabelle der Aktualisierungen entnommen werden, die diesem Dokument anhängt. Die Seiten, die Änderungen unterlagen, sind mit der geänderten Revisionsnummer versehen.

3) Guardare con attenzione il simbolo inserito nella colonna "Classificazione Modifica".
In questa colonna sarà inserito un simbolo che determina una classificazione delle modifiche apportate.
Questo consente di identificare con estrema rapidità l'importanza della modifica apportata;

3) Pay attention to the symbol in the "Change Classification" column.
This symbol signifies the category and significance of any changes

3) Besonders auf das in die Spalte „Änderungsklasse" eingefügte Symbol achten.In dieser Spalte wird das Symbol eingefügt, das für die Klasse der applizierten Änderungen steht.

Classificazione ***Classification*** **Klasse**	**Definizione Specificante gli elementi di modifica** ***Definition Change identifier*** **Erklärende Definition der Änderungselemente**	**Simbolo Identificativo** ***Symbol*** **Identifikationssymbol**
Chiave *Key* Schlüssel	Uscita e immissione di un prodotto *Product issuance and marketing* Ausgabe und Einführung eines Produkts	⇄
Importante *Major* Wichtig	Modifica che influenza gli ingombri/stato fornitura/installazione del prodotto *Change affecting overall dimensions/delivery condition/product installation* Änderung, die sich auf die Abmessungen/Lieferzustand/Produktinstallation auswirkt	▼
Secondaria *Minor* Sekundär	Modifica che riguarda traduzioni/impaginazioni/inserimento descrizioni *Change to translations/layout/captions* Änderung, die Übersetzungen/den Umbruch/eingefügte Beschreibungen betrifft	—

4) Qualora risultasse una diversità di quote tra disegno **2D – 3D** scaricato dal sito internet e tabella del catalogo è necessario consultare il nostro servizio tecnico.

4) In the event the dimensions in the 2D – 3D drawing downloaded from our site differ from those indicated in the catalogue table, contact our Engineering.

4) Diese ermöglicht ein schnelles Erfassen der Wichtigkeit der angesetzten Änderung.

Attenzione
Verificare la revisione in vostro possesso e la tabella degli aggiornamenti apportati nelle nuova revisione

Warning
Check your catalogue revision status against the latest updates table.

Achtung
Überprüfen Sie die Revision, die sich in Ihren Händen befindet, und die Tabelle der in der neuen Revision eingefügten Aktualisierung.

Potenza richiesta / *Required power* / Benötigte Leistung

$$P = \frac{m \cdot g \cdot v}{6 \cdot 10^4}$$

Sollevamento
Lifting
Heben

$$P = \frac{M \cdot n}{9550}$$

Rotazione
Rotation
Drehung

$$P = \frac{F \cdot v}{6 \cdot 10^4}$$

Traslazione
Linear mouvement
Linearbewegung

$$M = \frac{9550 \cdot P}{n}$$

Coppia
Torque
Drehmoment

$$F = 1000 \cdot \frac{M}{r}$$

Forza
Force
Kraft

$$v = \frac{2r \cdot \pi \cdot n}{1000}$$

Velocità lineare
Linear speed
Lineargeschwindigkeit

Carichi radiali / *Radial load* / Radialkrafte

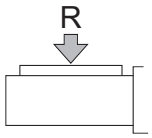

$$R = \frac{2000 \cdot T \cdot Kr}{d}$$

R (N)
Carico radiale
Radial load
Radialkraft

T (Nm)
Coppia sull'albero
Torque
Drehmoment

d (mm)
Diametro della ruota
Diameter
Durchmesser

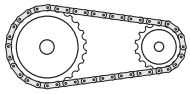

Kr = 1
Ruota per catena
Chain-wheel
Kettenrad

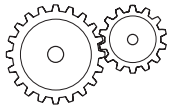

Kr = 1.06
Ingranaggio
Gear
Zahnrad

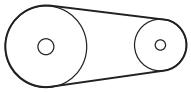

Kr = 1.5-2.5-3.5
1.5 - Cinghie dentate/Toothed belts/Zahnriemen
2.5 - Cinghie trapezoidali/V belt drives/Keilriemen
3.5 - Ruote di frizione (gomma su metallo)
Friction wheel drive (rubber on metal)
Kupplungsräder (Gummi auf Metall)

Momento d'inerzia — *Moment of inertia* — Trägheitsmoment

$J = 98.p.l.D^4$ Cilindro pieno / *Solid cylinder* / Vollzylinder
$J = 98.p.l.(D^4-d^4)$ Cilindro cavo / *Hollow cylinder* / Hohlzylinder

Conversione di una massa in movimento lineare in un momento d' inerzia riferito all'albero del motore

Conversion of a mass having a linear movement into a moment of inertia related to the motor shaft.

Umwandlung einer Masse mit Linearbewegung in ein Trägheitsmoment, das auf die Motorwelle bezogen ist.

$$J = 91.2 \cdot m \cdot \frac{v^2}{n^2}$$

Conversione di diversi momenti d'inerzia di massa a velocità diverse in un momento d'inerzia riferito all'albero motore.

Conversion of various mass moments of inertia having different speeds into a moment of inertia related to the motor shaft.

Umwandlung von verschiedenen Trägheits-momenten mit unterschiedlichen Geschwindigkeiten in ein Trägheitsmoment, das auf die Motorwelle bezogen ist.

$$J_a = \frac{J_2 \cdot n_2^{\,2} + J_3 \cdot n_3^{\,2} \ldots}{n_1^{\,2}}$$

P	= Potenza motore	*Rated power*	Motorleistung	[kW]
m	= Massa	*Mass*	Masse	[kg]
v	= Velocità lineare	*Linear speed*	Lineargeschwindigeit	[m/min]
F	= Forza	*Force*	Kraft	[N]
n	= Velocità di rotaz.	*Rotation speed*	Drehzahl	[min-1]
g	= 9.81	*9.81*	9.81	[m/sec]
M	= Coppia del motore	*Motor torque*	Motor-Drehmoment	[Nm]
r	= Raggio	*Radius*	Radius	[mm]
J	= Inerzia	*Moment of inertia*	Trägheitsmoment	[kgm2]
l	= Lunghezza	*Length*	Länge	[mm]
d	= Diametro interno	*Inner diameter*	Innendurchmesser	[mm]
D	= Diametro esterno	*Outer diameter*	Außendurchmesser	[mm]
p	= Peso specifico	*Specific weight*	Spezifisches Gewicht	[kg/dm3]

Компания Редуктор

Г. Нижний Новгород, ул. Зайцева 31, оф. 508

Тел./факс +7 (831) 223-81-81
E-mail: info@reduktor.nnov.ru
Сайт: www.reduktor-stm.ru

STM PIEMONTE

Strada del Cascinotto, 139/43B
10156 TORINO
T: +39/011/22.38.463
F: +39/011/22.38.463
E-MAIL: info@labet.it

STM LOMBARDIA

Via Velleia, 1
20052 Monza (Mi)
T: +39/039/83.79.41
F: +39/039/83.79.490
E-MAIL: sef@sefmotoriduttori.com

STM SUD

Via Ottaviano, 298/300
80040 San Gennaro Vesuviano (Na)
T: +39/081/52.86.802
F: +39/081/52.86.803
E-MAIL: info@stmsud.it

STM VENETO

Via Manfredini, 54
45100 Loc. Granzette ROVIGO
T: +39/0425/48.61.58
F: +39/0425/93.20.68
E-MAIL: stmveneto@stmspa.com

STM SERVICE

Via Enrico Fermi, 35
00044 Frascati (RM)
T: +39/06/97.60.85.44
F: +39/06/97.60.85.45
E-MAIL: info@tecnodrivesrl.it

STM UKRAINE

Belaia Tzerkov Yaroslava Mudrogo, ST66/13
09107 Region of Kiev
T: +38/04463519369
F: +38/0446391037
E-MAIL: stm@stm.com.ua

STM RUS

Bolshaya Pochtovaya st. 30
105082 Mosca
T: +74/957836809
F: +74/952672073
E-MAIL: ars@ttaars.ru

STM AANDRIJFTECHNIEK NL

Jan Vrijmanstraat, 12
1087MC, Amsterdam - The Netherlands
T: + 31/20 3586361
F: +31/20 3586361
E-MAIL: stmaandrijftechniek@stmspa.com

STM SWEDEN

Stathogavagen, 48
60223 Norrkoping
T: +46/11158340
F: +46/11158349
E-MAIL: info@stmsweden.se

STM FINLAND

Luoteisrinne, 5
02270 Espoo
T: +35/8440674519
F: +35/8104256805
E-MAIL: info@stmfinland.fi

STM DEUTSCHLAND

Gewerbepark Markfeld 7a
83043 BAD AIBLING
T: +49/8061/937680
F: +49/8061/9376829
E-MAIL: stmdeutschland@stmspa.com

STM POWER TRANSMISSION UK

UNIT 1 OASIS BUSINESS PARK ROAD ONE,
WINSFORD Industrial Est - CW7 3RY - WINSFORD
T: +44/1606/557200
F: +44/1606/557396
E-MAIL: info@stmuk.co.uk

STM IBERIA

Contrada Nacional 121, km 39,400
31390 Olite Navarra
T: +34/948712017
F: +34/948712153
E-MAIL: martinena@martinenasl.es

STM SCHWEIZ

Bösch 27
6331 Hünenberg
SVIZZERA
T: 0041 41 7832970
F: 0041 41 7832971
E-MAIL: info@eurodrives.ch

STM TURKIYE

10026 - IZMIR
Str. No: 54 AOSB CIGLI
T: 0090.232.328 36 39
F: 0090.232.328 36 40
E-MAIL: info@novaguc.com

STM team

Vi invitiamo pertanto a contattare il ns ufficio commerciale per qualsiasi ulteriore informazione al fine di comunicarVi il riferimento più idoneo e vicino alla Vs sede.
Please contact our Sales dept. for information about the nearest distributor to your premises.
Bitte setzen Sie sich mit unserer Verkaufsabteilung in Verbindung um Informationen bezueglich eines Haendler der sich in Ihrer Naehe befindet zu bekommen.

DO BRASIL

Rua Padre Raposo,
1293 Mooca (SP)
T: +55/11/2605.1144
F: +55/11/2601.1559
E-MAIL: stmdobrasil@stmdobrasil.com

ARGENTINA

Langeri, 3525 (Santos Lugares)
1676 Buenos Aires
T: +54/11/41.15.63.85
F: +54/11/47.57.05.12
E-MAIL: comercial@stmteam.com.ar

INDIA

STM INDIA
T: +91 99 42 559285
E-MAIL: k.saravanan@stmspa.com

AUSTRALIA

13/97 Bayfield Road East
Bayswater - VIC 3153
T: +61/397617355
F: +61/397617222
E-MAIL: pbeveridge@hmagroup.com.au

ASIA PACIFIC

STM-AP (ASIA PACIFIC) PTE LTD
6 Penjuru Place #01-32 Penjuru Tech Hub,
Singapore 608781
T: 65-6266 2022 F:65-6266 5955
E-MAIL: stm@stmap.com

KOREA

STM Korea
#104-216, 41, Yutongdanji 1-ro,
Gangseo-gu, Busan, 618-899 Rep. of KOREA
T: +82-01-8536-6469 - +82-70-8730-1238
F: +82-51-955-2250
E-MAIL: stmapkorea@gmail.com

BEIJING

Rm306, Blk A, Jingjiang Building,
#35, Bagou Nan Rd, Haidian Dist.
Beijing 100089, China
T: 0086 10 8256 5319
F: 0086 10 8255 1142
E-MAIL: stm@stmchina.cn

SOUTH AFRICA

22 Lorna Rd, Anderbolt, Boksburg North
PO Box 6300, Dunswart, 1508
Tel: +27 10 010 6879
F: +27 86 461 5898
E-MAIL: anthony@stmsa.co.za

Standard Line
CT 16 IGBD3.1
07/17

DE MEXICO

STM RIDUTTORI MEXICO S.A. DE C.V
T: +52 33 36150087
E-MAIL: info@stmmexico.com.mx

YOUNG POWERTECH INC

3060 PLAZA DR. #107
19061 - GARNET VALLEY - PA
T: 0016105580760
F: 0016505580762
E-MAIL: Info@youngpowertech.com

Questo catalogo annulla e sostituisce ogni precedente edizione o revisione.
I dati esposti nel catalogo non sono impegnativi e ci riserviamo il diritto di apportare eventuali modifiche senza darne preavviso, nell'ottica di un miglioramento continuo del prodotto.

Qualora questo catalogo non Vi sia giunto in distribuzione controllata, l'aggiornamento dei dati ivi contenuto non è assicurato.

In tal caso la versione più aggiornata è disponibile sul ns. sito internet: www.stmspa.com

This catalogue cancels and replaces any preceding issue or revision.
The data provided in the catalogue are not binding; in line with our commitment to on-going product improvement, we reserve the right to make changes without prior notice.

If you obtained this catalogue other than through controlled distribution channels, no warranty is made as to whether the data contained herein is up-to-date.

When in doubt, you are welcome to download the latest up-to-date version available on our web site: www.stmspa.com

Dieser Katalog annulliert und ersetzt jede vorausgehende Ausgabe oder Revision.
Die im vorliegenden Katalog enthaltenen Daten sind nicht verpflichtend. Wir behalten uns diesbezüglich das Recht vor, ohne entsprechende Vorankündigungen und im Sinne einer kontinuierlichen Produktverbesserung eventuelle Änderungen antragen zu können.

Sollten Sie diesen Katalog nicht im Zuge eines kontrollierten Vertriebs erhalten haben, kann die Aktualisierung der darin enthaltenen Daten nicht gewährleistet werden.

In diesem Fall finden Sie die aktuellste Version unter der Website: www.stmspa.com

Vi invitiamo pertanto a contattare il ns ufficio commerciale per qualsiasi ulteriore informazione al fine di comunicarVi il riferimento più idoneo e vicino alla Vs sede.
Please contact our Sales dept. for information about the nearest distributor to your premises.
Bitte setzen Sie sich mit unserer Verkaufsabteilung in Verbindung um Informationen bezueglich eines Haendler der sich in Ihrer Naehe befindet zu bekommen.

HOT WINDS 05/2015

STM S.p.A.
Headquarter
Via del Maccabreccia, 39
40012 Lippo di Calderara di Reno (BO)
Tel. +39 051 37 65 711
Fax +39 051 64 66 178
www.stmspa.com - info@stmspa.com

GSM S.p.A.
Via Malavolti, 48
41100 Modena - Italy
Tel. +39 051 37 65 711
Fax +39 051 64 66 178
www.stmspa.com - info@stmspa.com